A. J. ROBUS.

VERTICAL RETORT GAS APPARATUS.

APPLICATION FILED OCT. 1, 1912.

1,068,820.

Patented July 29, 1913.

3 SHEETS—SHEET 1.

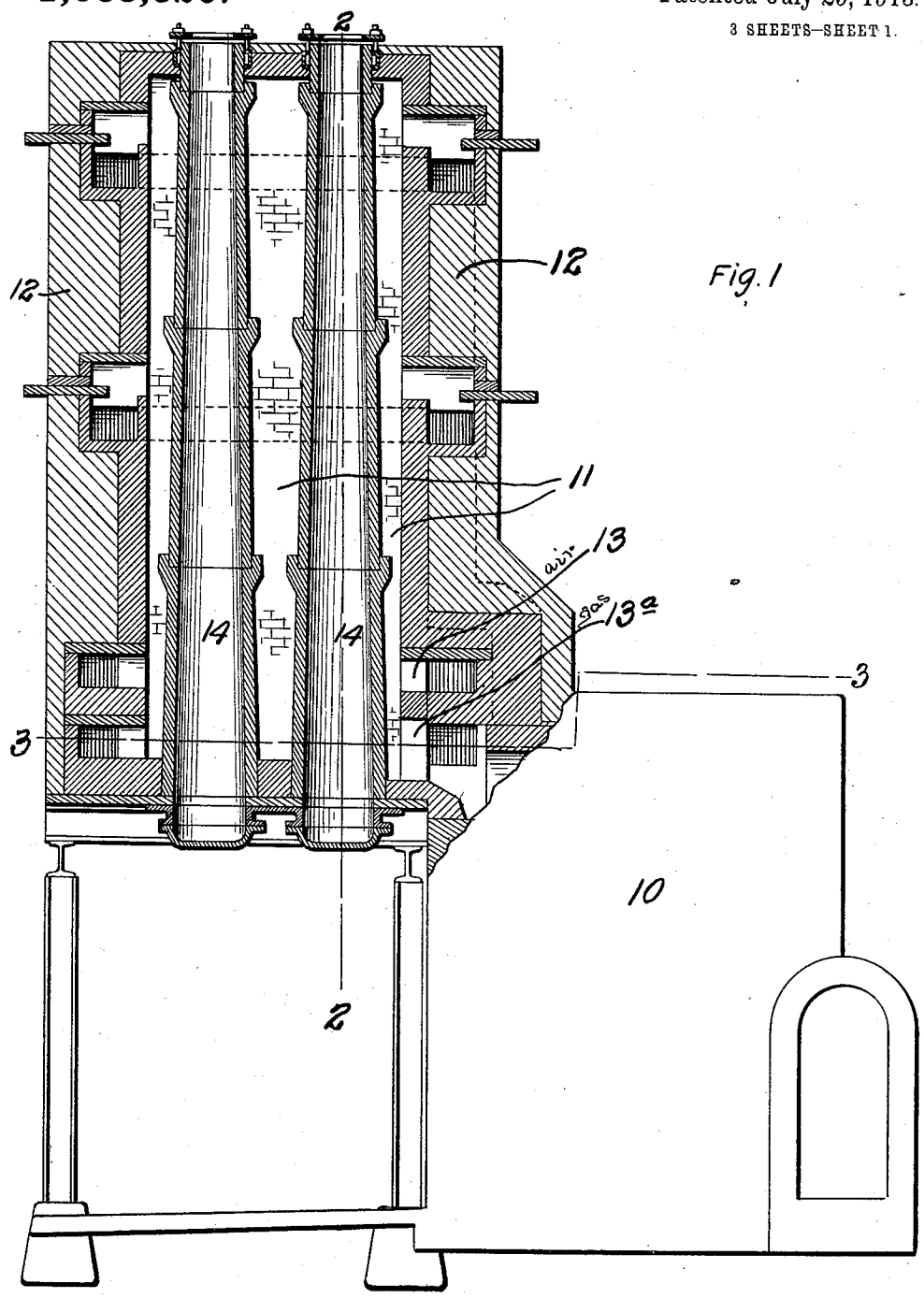

Fig. 1

Witnesses

Wm. James.

A. B. Butler

Inventor

Albert J. Robus

By F. C. Cornelius, Att'y

COLUMBIA PLANOGRAPH CO., WASHINGTON, D. C.

A. J. ROBUS.

VERTICAL RETORT GAS APPARATUS.

APPLICATION FILED OCT. 1, 1912.

1,068,820.

Patented July 29, 1913.

3 SHEETS—SHEET 2.

Fig. 2

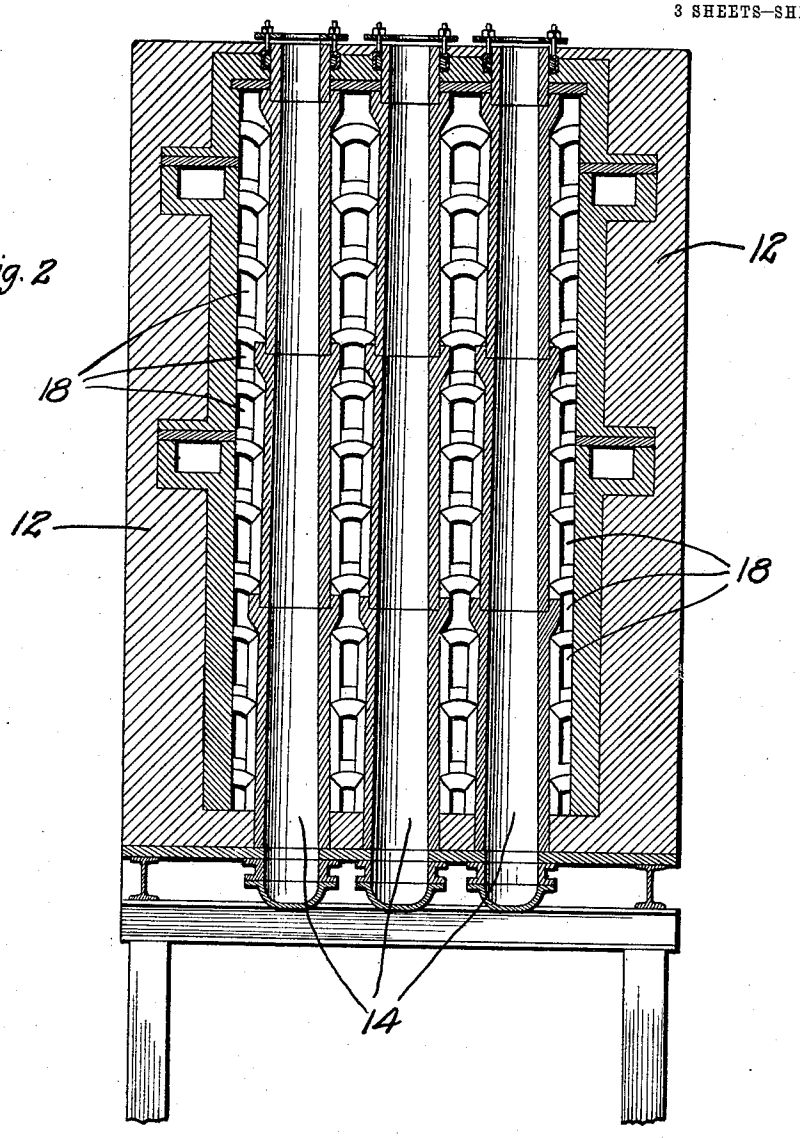

Witnesses
Wm. Jarvis
C. L. Butler

Inventor
Albert J. Robus
By F. R. Conrad, Att'y.

COLUMBIA PLANOGRAPH CO., WASHINGTON, D. C.

A. J. ROBUS.

VERTICAL RETORT GAS APPARATUS.

APPLICATION FILED OCT. 1, 1912.

1,068,820.

Patented July 29, 1913.

3 SHEETS—SHEET 3.

Fig. 3

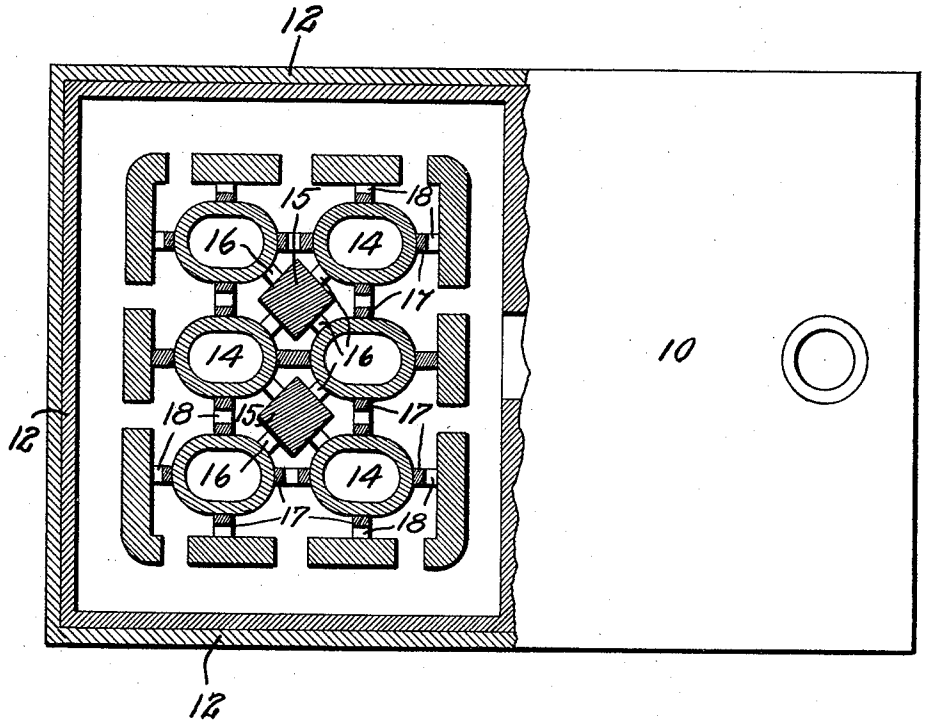

Witnesses

Wm. James.

C. J. Butler

Inventor

Albert J. Robus

By F. C. Cornwall Att'y

COLUMBIA PLANOGRAPH CO., WASHINGTON, D. C.

UNITED STATES PATENT OFFICE.

ALBERT J. ROBUS, OF ST. LOUIS, MISSOURI, ASSIGNOR TO EVENS & HOWARD FIRE BRICK COMPANY, OF ST. LOUIS, MISSOURI, A CORPORATION OF MISSOURI.

VERTICAL-RETORT GAS APPARATUS.

1,068,820. Specification of Letters Patent. Patented July 29, 1913.

Original application filed June 4, 1912, Serial No. 701,576. Divided and this application filed October 1, 1912. Serial No. 723,449.

To all whom it may concern:

Be it known that I, ALBERT J. ROBUS, a subject of the King of Great Britain, residing at St. Louis, Missouri, have invented a certain new and useful Improvement in Vertical-Retort Gas Apparatus, of which the following is a full, clear, and exact description, such as will enable others skilled in the art to which it appertains to make and use the same, reference being had to the accompanying drawings, forming part of this specification, in which—

Figure 1 is a vertical section of a vertical retort coal gas apparatus and showing the retort chamber and the retorts therein in vertical section. Fig. 2 is a vertical section taken approximately on the line 2—2 of Fig. 1. Fig. 3 is a horizontal section taken approximately on the line 3—3 of Fig. 1.

This invention relates to new and useful improvements in vertical retort benches utilized for the distillation of coal in the production of gas, this application being a division of my application for patent on vertical retort gas apparatus, filed June 4, 1912, Serial No. 701,576.

The principal object of my present invention is to provide simple means for supporting the retorts within the retort chamber against pressure resulting from the weight of the charge, thereby overcoming all tendency of the retorts to buckle or become distorted while in service and further to overcome the tendency of the retort walls to break or crack which action results in a leakage and loss of gas.

In order to firmly support the retorts and the weight of their charge within the retort chamber I propose to arrange one or more vertically disposed piers within the retort chamber between the retorts and to provide between said retorts and the walls of the retort chamber a series of perforated supporting walls which combine with the piers and walls of the retort chamber in maintaining the retorts in proper position and at the same time to permit free circulation of the combustible gases throughout the retort chamber.

To the above purpose my invention consists in certain novel features of construction and arrangement of parts hereinafter more fully described and claimed.

Referring by numerals to the accompanying drawings 10 designates a furnace or producer of any desired construction and arranged immediately above and to the rear of this furnace is the retort chamber 11 inclosed by the walls 12. The producer gases and secondary air are admitted to the lower portion of the chamber 11 through suitable openings 13 and 13ª. Arranged within the retort chamber 11 is a series of vertically disposed retorts 14 preferably made in sections, which retorts receive the coal to be distilled. In the present instance I have shown a series of six retorts within the retort chamber although it will readily be understood that the number of retorts utilized may be varied corresponding to the size of the retort chamber.

Located between the retorts 14 and extending from the bottom of the retort chamber to the top thereof is one or more piers 15 formed of fire brick or analogous material and located between the faces of these piers and the faces of the adjacent retorts are narrow vertically disposed walls 16 of fire brick or analogous material, said walls being perforated at suitable distances apart in order to permit free circulation of combustible gases.

Arranged between the retorts 14 and between the retorts and the inner faces of the walls 12 are vertically disposed supporting walls 17 formed of fire brick or analogous material, said walls being provided at suitable distances apart with arched openings 18 in order to permit free circulation of the burning gases and products of combustion throughout the entire height of the retort chamber.

By arranging the walls 16 and 17 radially with respect to the vertical axes of the retorts each retort is supported at a plurality of points from the retort walls and the piers 15, and thus any pressure on the retorts due to the weight of the charge therein or due to expansion of the material of which said retorts are constructed will be transmitted to the walls of the retort chamber and the piers therein, thereby effectively maintaining the retorts in proper position and preventing them from becoming distorted while in service.

The openings in the walls 16 and 17 read-

ily permit free circulation of the combustible gases and the heat throughout the entire retort chamber.

It will be readily understood that minor changes in the size, form and construction of the various parts of my improved retort can be made and substituted for those herein shown and described without departing from the spirit of my invention, the scope of which is set forth in the appended claims.

I claim.

1. In a coal gas apparatus of the class described, a retort chamber having a series of vertically disposed retorts, a series of piers within said retort chamber between the retorts therein, and a series of retort-supporting walls interposed between each pier and the adjacent retorts, which walls are each provided with a series of arched openings.

2. In a coal gas apparatus of the class described, a retort chamber, a series of vertically disposed retorts therein, vertically disposed piers between the retorts, and vertically disposed retort supporting walls between said retorts and said piers, which retort-supporting walls are perforated.

3. In an apparatus of the class described, a retort chamber, a series of vertical retorts therein, a series of piers between the retorts, a series of perforated supporting walls between said piers and retorts, and a series of perforated supporting walls between the retorts and the walls of the retort chamber.

4. In an apparatus of the class described, a retort chamber, a series of retorts therein, piers between the retorts, perforated supporting walls between the retorts and piers, perforated supporting walls between the retorts, and perforated supporting walls between the retorts and the walls of the retort chamber.

In testimony whereof I hereunto affix my signature in the presence of two witnesses, this 14th day of September, 1912.

ALBERT J. ROBUS.

Witnesses:
M. P. SMITH,
M. A. HANDEL.

Copies of this patent may be obtained for five cents each, by addressing the "Commissioner of Patents, Washington, D. C."