(No Model.) 2 Sheets—Sheet 1.

A. I. HOVLAND.

FURNACE.

No. 480,769. Patented Aug. 16, 1892.

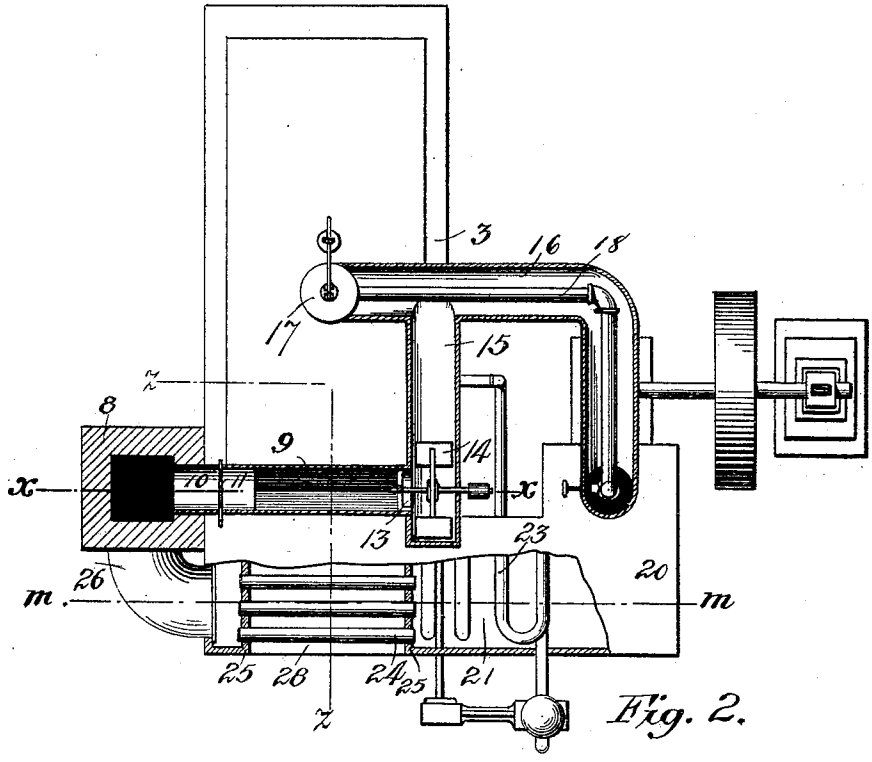

Fig. 2.

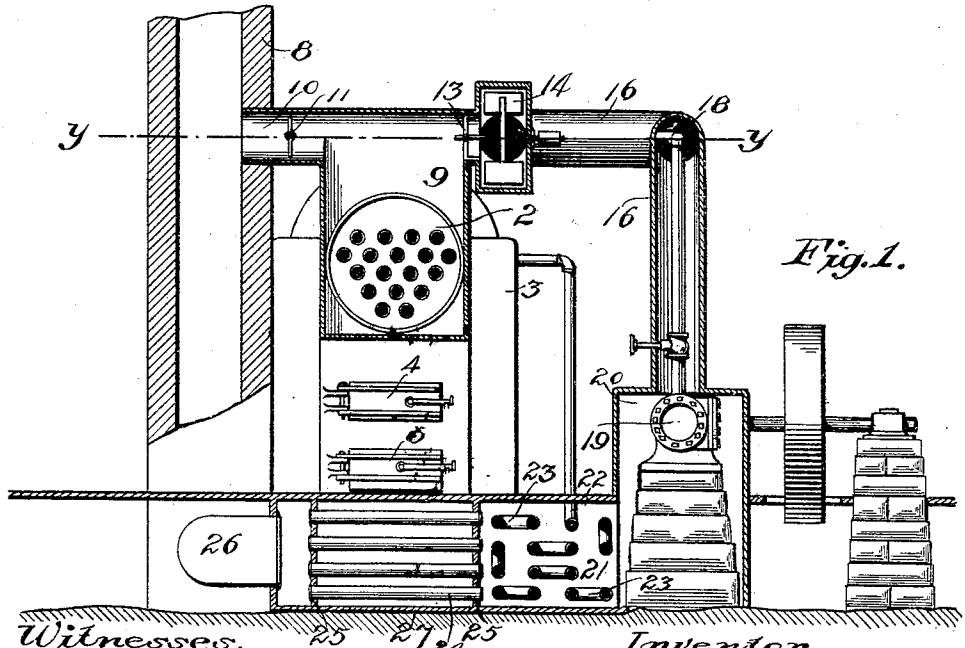

Fig. 1.

Witnesses,
C. E. Van Dorn.
E. C. Lyon.

Inventor,
Anton I. Hovland.
By Paul & Brewer Att'ys.

THE NORRIS PETERS CO., PHOTO-LITHO., WASHINGTON, D. C.

(No Model.) 2 Sheets—Sheet 2.

A. I. HOVLAND.

FURNACE.

No. 480,769. Patented Aug. 16, 1892.

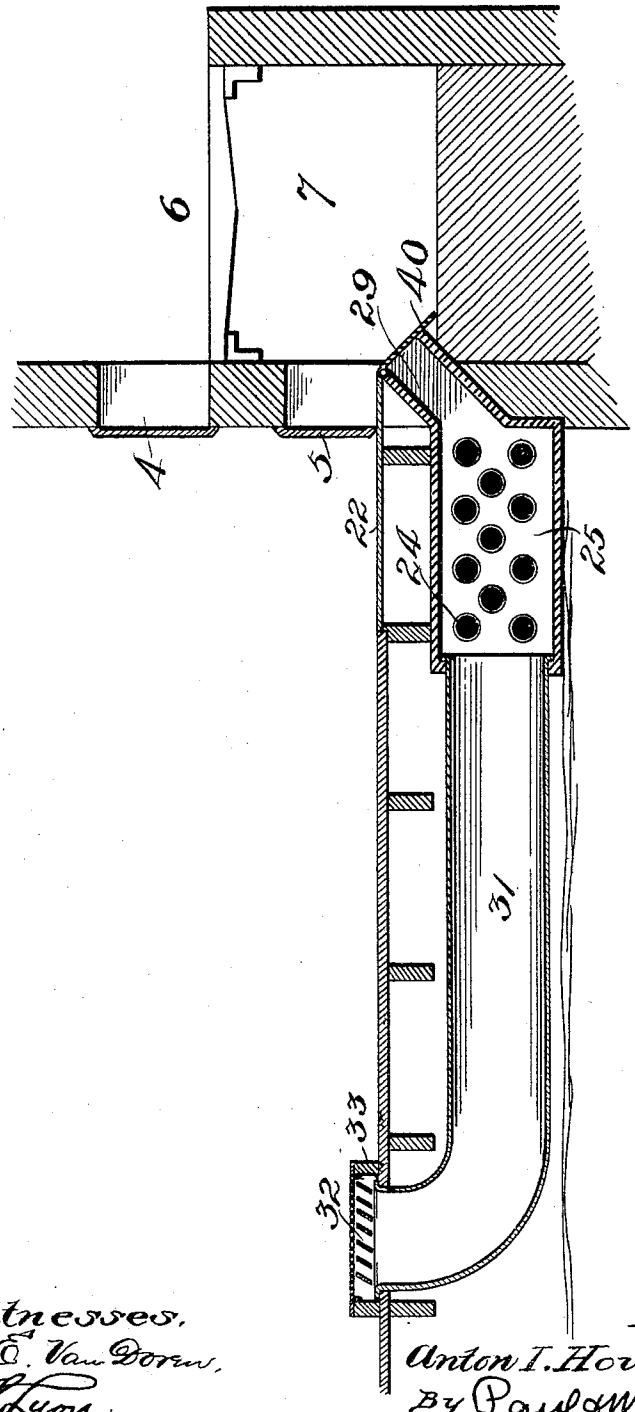

Fig. 3.

Witnesses.
C. E. Van Doren.
F. S. Lyon

Inventor,
Anton I. Hovland,
By Paul & Merwin att'ys.

THE NORRIS PETERS CO., PHOTO-LITHO., WASHINGTON, D. C.

UNITED STATES PATENT OFFICE.

ANTON I. HOVLAND, OF FARIBAULT, MINNESOTA.

FURNACE.

SPECIFICATION forming part of Letters Patent No. 480,769, dated August 16, 1892.

Application filed November 27, 1891. Serial No. 413,356. (No model.)

To all whom it may concern:

Be it known that I, ANTON I. HOVLAND, of Faribault, in the county of Rice and State of Minnesota, have invented certain Improvements in Furnaces, of which the following is a specification.

My invention relates to means for utilizing the heat of the smoke as it passes off from the furnace and for profitably consuming such heat in various uses.

To this end my invention consists in the combination, with a boiler or other furnace, of a duct leading down around the steam-engine and the steam-supply pipe therefor, a duct for the smoke and heat arranged beneath or at the floor-line, feed-water coils arranged therein, whereby the feed-water for the boiler is heated, and an air-heating radiator arranged at the floor-line and provided with transverse flues through which the smoke and heated gases pass into the smoke-flue, an air-inlet and an outlet into the furnace being provided for said radiator, all as hereinafter described, and particularly pointed out in the claims.

My invention will be more readily understood by reference to the accompanying drawings, in which—

Figure 1 is a front elevation of a boiler-furnace and an engine and apparatus embodying my invention combined therewith, portions of the same being represented in section, as seen on the line $x\,x$ of Fig. 2. Fig. 2 is a plan view thereof on the line $y\,y$ of Fig. 1. Fig. 3 is a longitudinal vertical section on the line $z\,z$ of Fig. 2, showing, also, means for supplying air to the radiator.

As shown in the drawings, the boiler 2 is incased in the usual walls and covering 3. The doors 4 and 5 of the front cover the openings into the fire-pot 6 and the ash-pit 7, Fig. 3.

8 represents the chimney or smoke-stack, which extends down below the floor of the furnace-room, as shown. From the smoke-box 9 on the front of the furnace a direct duct 10 leads into the upper part of the chimney, so that while a fire is being started a straight draft may be had. After the fire is properly started the damper 11 is closed, as shown. From the outer side of the smoke-box the pipe 13 leads directly into the suction and blast-fan case 14, from whence the hot air and smoke are discharged through the pipe 15, which opens into the pipe 16, extending from the steam-dome 17 and surrounding the live-steam pipe 18, which leads to the engine steam chest and cylinder 19. The pipe 16 extends down to and opens into the cylinder-casing 20, arranged about the engine-cylinder. In this way it will be seen that the steam-pipe is kept very hot and loss of pressure therein, owing to radiation of heat, prevented. The same is true of the steam-chest and cylinder of the engine. From the jacket 20 the smoke and hot gases pass into the chamber 21, arranged beneath the floor 22 of the furnace-room. The feed-water pipes arranged in coils 23 are disposed in this chamber 21 and the feed-water passing through them is heated to quite a high temperature before passing into the boiler. From this chamber the hot gases pass through the flues 24, extending between the tight end pieces or heads 25, shutting off this part of the duct beneath the floor from the other parts. From the flues 24 the smoke is discharged through the pipe or duct 26 into the bottom of the smoke-flue 8.

In connection with the radiator and extending from the opening 28 therein I provide the duct 31, which leads out into a remote part of the boiler-room, preferably. The end of the duct is closed by the grating 32, arranged in the raised curd 33, which prevents the sweeping of dirt into the duct. This grating is of the register style, so that the supply of air to the radiator may be cut off at this point or accurately regulated, as rendered necessary by the requirements of the fire. Passing into the radiator the air passes among the flues 24, being heated to a high point thereby, and thence flowing upward through the duct or exhaust 29, extending into the ash-pit of the furnace. The top of this flue 29 is closed by a door 40 when the ashes are being drawn. The advantage of this construction and of the close location of the air-radiator to the furnace is that a very hot draft passing up through the coal on the grate is provided, and supplying the oxygen at a very high temperature a much more complete combustion of the products is attained. It will thus be seen that in several ways I accomplish a great saving of fuel, it being a fact that after passing through the various parts of my apparatus the smoke discharged from the chimney is

barely perceptible, the greater portion thereof after the starting of the fire being originally consumed in the furnace.

Having thus described my invention, I claim as new and desire to secure by Letters Patent—

1. The combination of the furnace, with the smoke-chimney, the furnace-room floor, said chimney extending to a point beneath the same, the ash-pit and fire-box of said furnace, a box arranged beneath said floor, a duct leading from one side of said box into said ash-box, a fresh air-duct leading into the opposite side of said box, a chamber arranged at each end of said box, horizontal flues 24, passing from chamber to chamber and through said box, a smoke-pipe leading from the top of the furnace down to the chamber, surrounding one end of said box, a duct leading from the chamber at the other end to the base of said chimney, and a direct connection 10, having a damper 11, all substantially as described, and for the purpose set forth.

2. The combination, with the furnace and boiler, of the smoke-flue, the smoke-pipe, one of said smoke-pipes surrounding the live-steam pipe, the engine, a jacket about the same, a feed-water coil, a chamber for the same, a connection therefrom to the smoke-flue, and means for injecting the water from said coil into the boiler, as and for the purpose specified.

3. The combination, with the furnace and the boiler, of a smoke-flue, a smoke-box of said boiler, a direct connection 10 therefrom to the smoke-flue, the engine, the steam-dome of the boiler, the steam-pipe extending therefrom to said engine, a smoke-pipe inclosing said steam-pipe, a jacket about said cylinder of said engine and connected to said smoke-pipe, a suction-pan within said smoke box and pipe, a feed-water coil, a containing-chamber therefor, a radiator, longitudinal flues therein for the passage of the smoke into the lower end of the chimney, openings into said radiator for the air, and an opening therefrom into the ash-pit of the furnace, said radiator and feed-water chamber being arranged below the grate-line of the furnace.

4. The combination, with the furnace, of the air-radiator having horizontal flues 24 and arranged immediately in front of the furnace and beneath the floor, the air-duct 31 to lead the air into the same, a raised valve-grating covering the mouth of the said duct, whereby the supply of air may be regulated, and a smoke-pipe passing into a chamber surrounding the end of the radiator, the smoke passing thence through the flues 24 and thence to the smoke-stack, substantially as described.

In testimony whereof I have hereunto set my hand this 3d day of November, 1891.

ANTON I. HOVLAND.

In presence of—

C. G. HAWLEY,

F. S. LYON.