US00D418808S

United States Patent [19]

Lee

[11] **Patent Number: Des. 418,808**

[45] **Date of Patent: ** Jan. 11, 2000**

[54] **COMPUTER POWER SUPPLY**

[76] Inventor: **Kenny Lee**, 10F, No. 18, Lane 609, Sec.5, Chung Hsin Road, San Chung City, Taipei Hsien, Taiwan

[**] Term: **14 Years**

[21] Appl. No.: **29/100,111**

[22] Filed: **Feb. 4, 1999**

[51] **LOC (7) Cl.** **13-02**

[52] **U.S. Cl.** **D13/110**

[58] **Field of Search** D13/110, 118, D13/123; 307/66, 150; 361/730, 735, 678, 695

[56] **References Cited**

U.S. PATENT DOCUMENTS

5,587,881 12/1996 Wang 361/695
5,612,854 3/1997 Wiscombe et al. 361/727
5,808,867 9/1998 Wang 361/695

Primary Examiner—Joel Sincavage
Attorney, Agent, or Firm—Pro-Techtor International Services

[57] **CLAIM**

The ornamental design for a computer power supply, as shown and described.

DESCRIPTION

FIG. **1** is a top front and right side perspective view of a computer power supply showing my new design;
FIG. **2** is a front elevational view thereof;
FIG. **3** is a rear elevational view thereof;
FIG. **4** is a left side elevational view thereof;
FIG. **5** is a right side elevational view thereof;
FIG. **6** is a top plan view thereof; and,
FIG. **7** is a bottom plan view thereof.

1 Claim, 4 Drawing Sheets

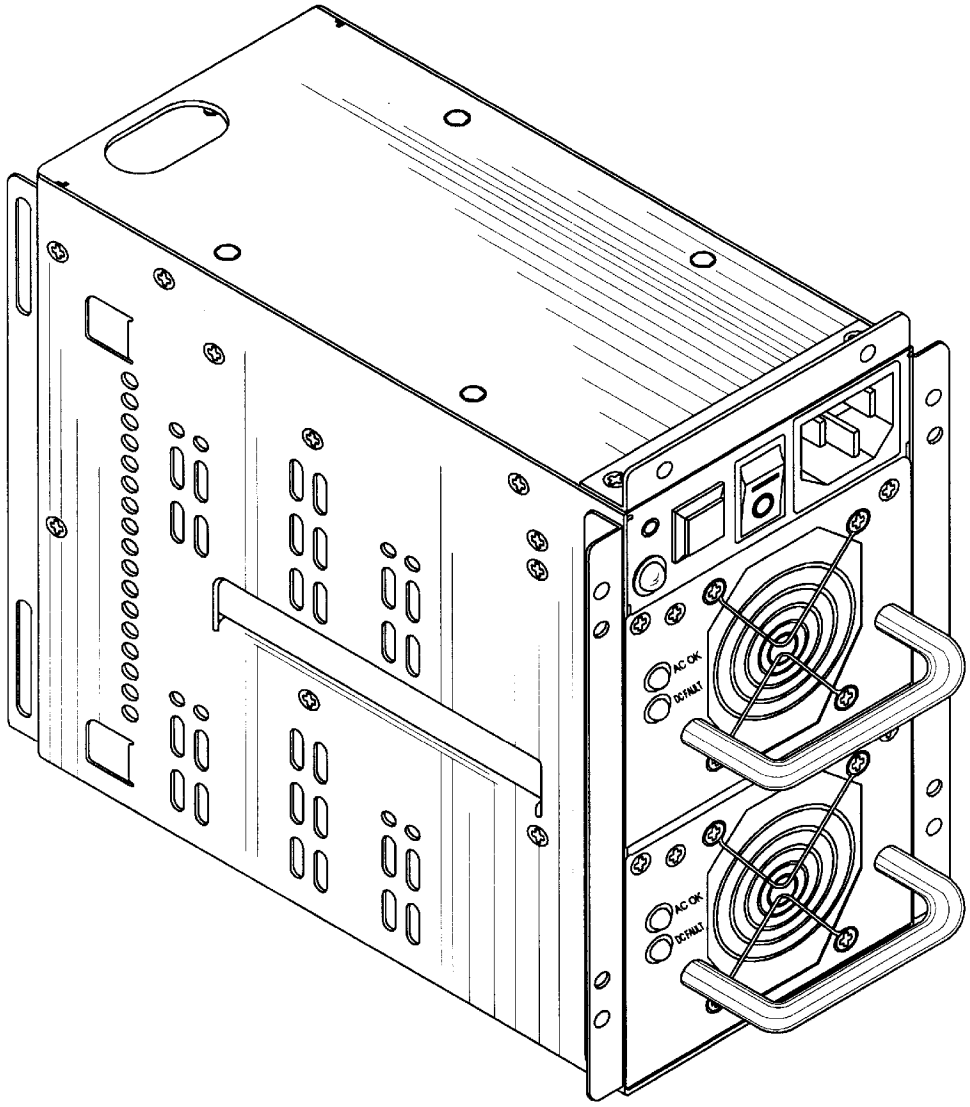

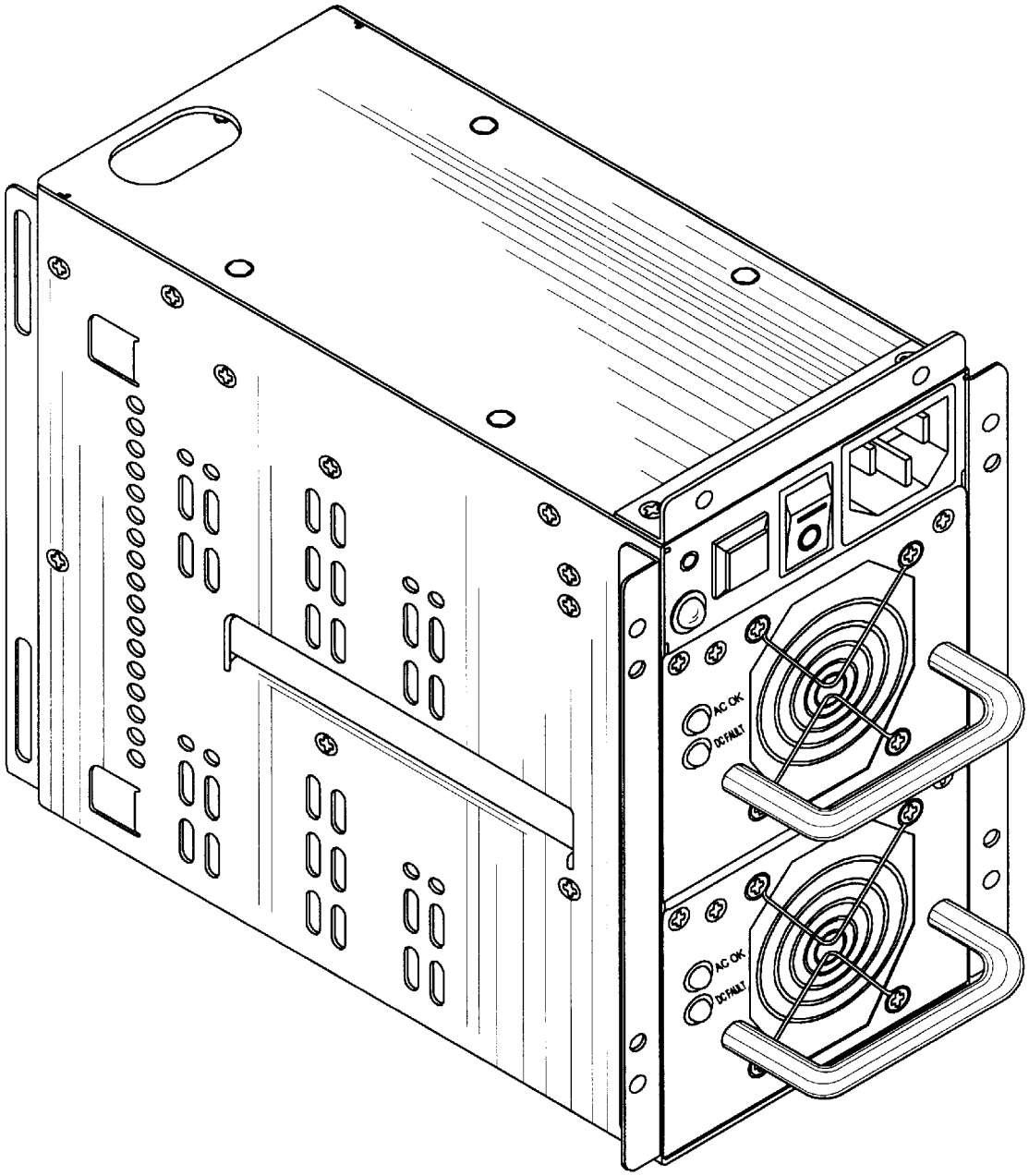

Fig.1

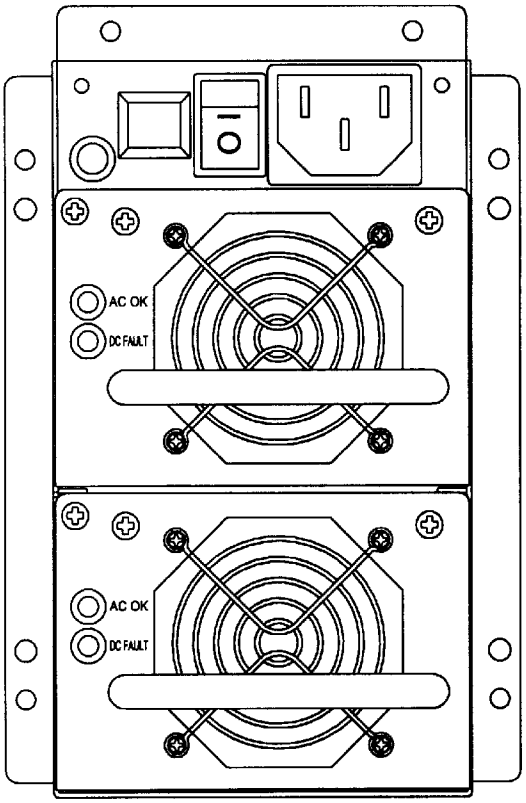

Fig.2

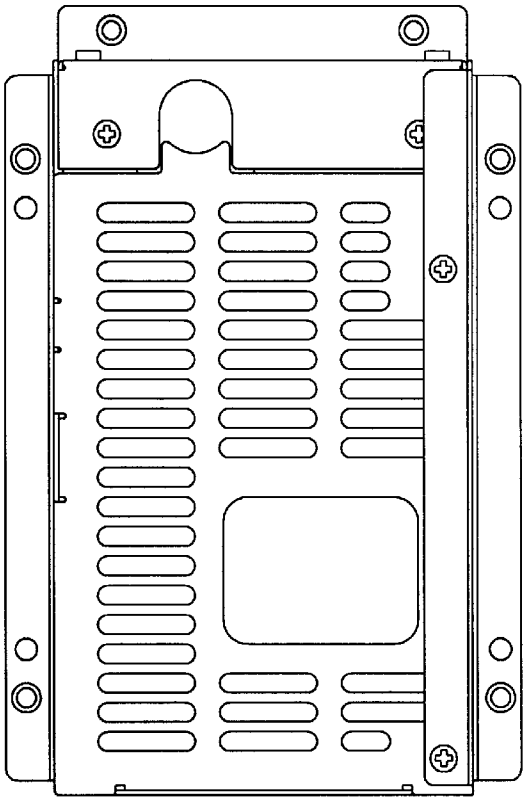

Fig.3

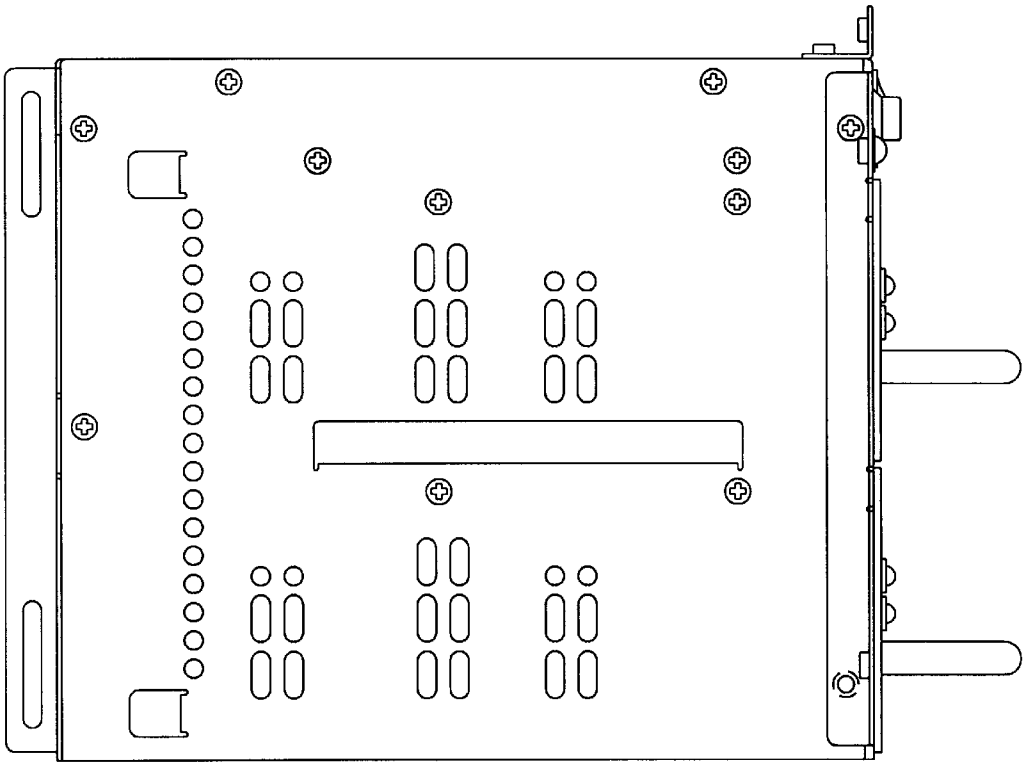

Fig.4

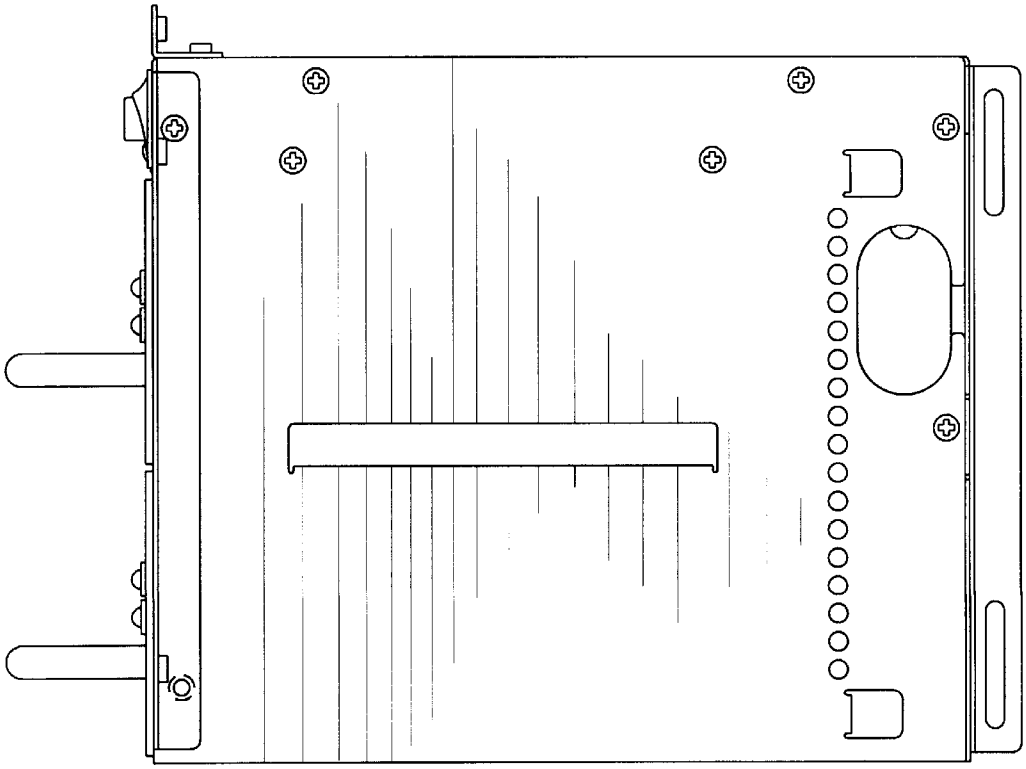

Fig.5

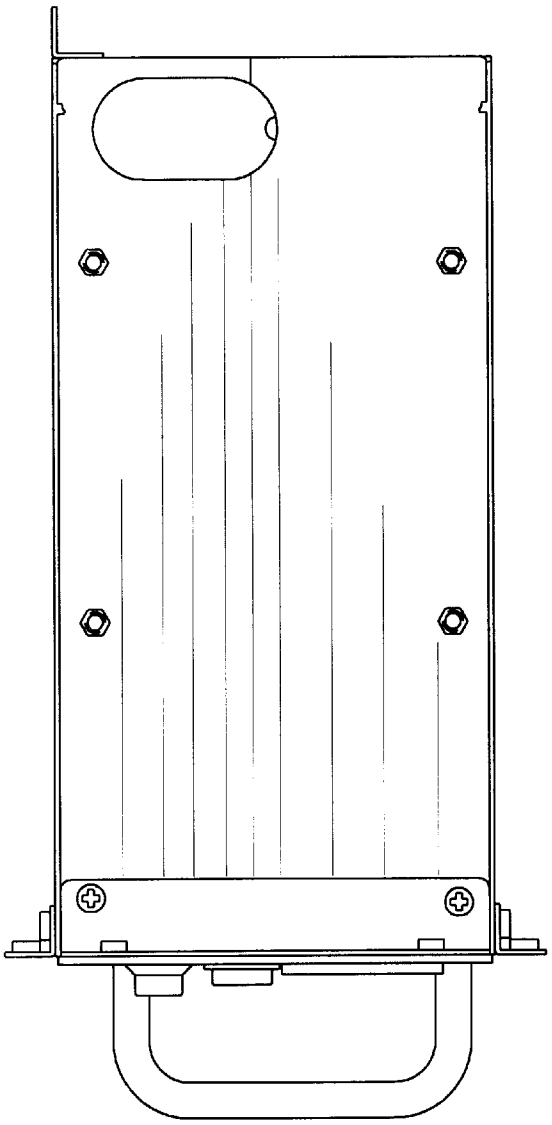

Fig.6

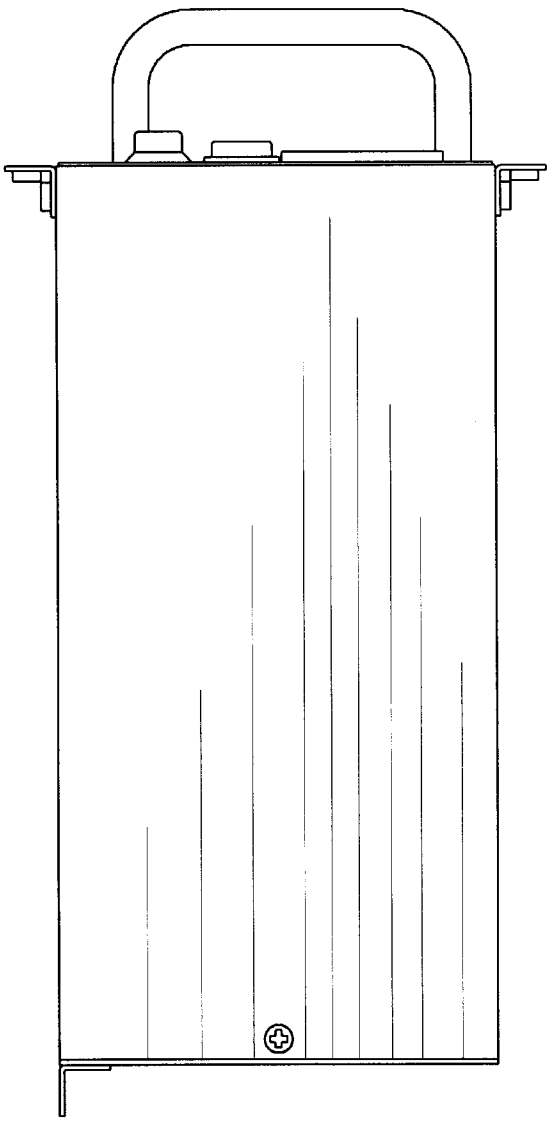

Fig.7