455/6

AU 233 EX

OR 1,840,013

Examiner

Jan. 5, 1932. M. B. BENSON 1,840,013

RADIO RECEIVING AND REPRODUCTION SYSTEM

Filed Feb. 10, 1930 3 Sheets-Sheet 1

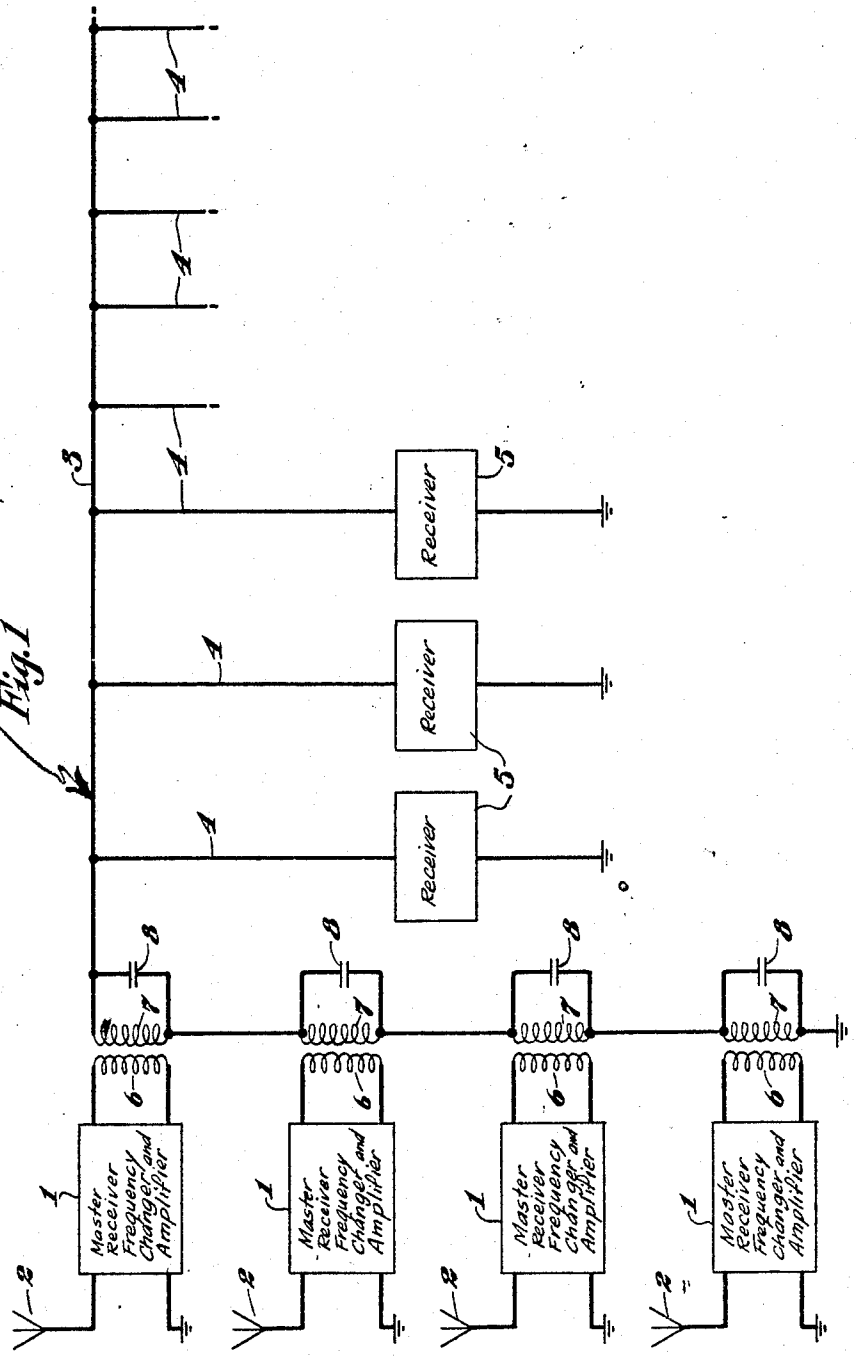

May be house wiring p 2, l 119

Fig. 1

INVENTOR
Melvin B. Benson,
BY
Bartlett Eyre Scott & Keel,
ATTORNEYS

RADIO ENERGY.
20

Examine

Jan. 5, 1932. M. B. BENSON 1,840,013

RADIO RECEIVING AND REPRODUCTION SYSTEM

Filed Feb. 10, 1930 3 Sheets-Sheet 2

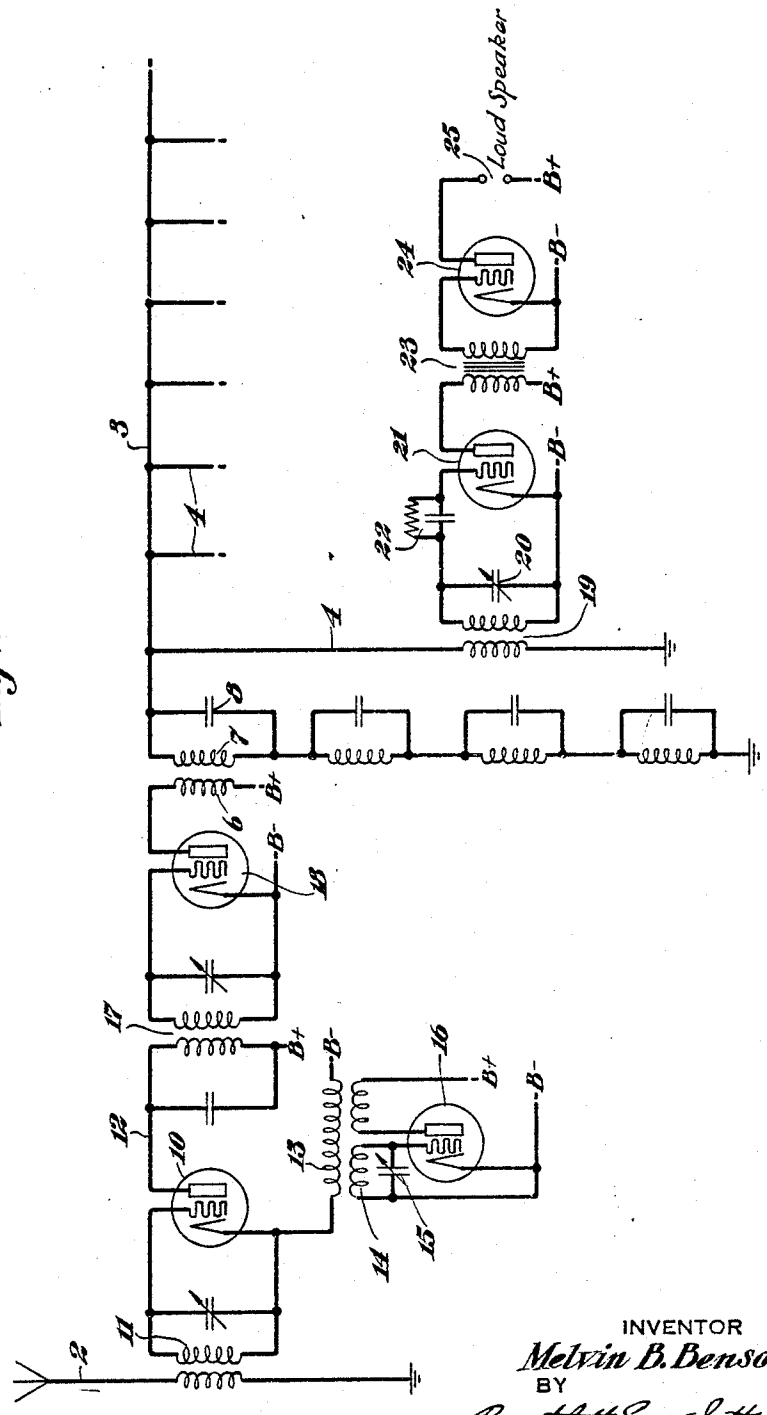

Fig. 2

INVENTOR
Melvin B. Benson
BY
Bartlett Eyre Scott & Keel,
ATTORNEYS

250 ... ENERGY.

Examine

Jan. 5, 1932. M. B. BENSON 1,840,013

RADIO RECEIVING AND REPRODUCTION SYSTEM

Filed Feb. 10, 1930 3 Sheets-Sheet 3

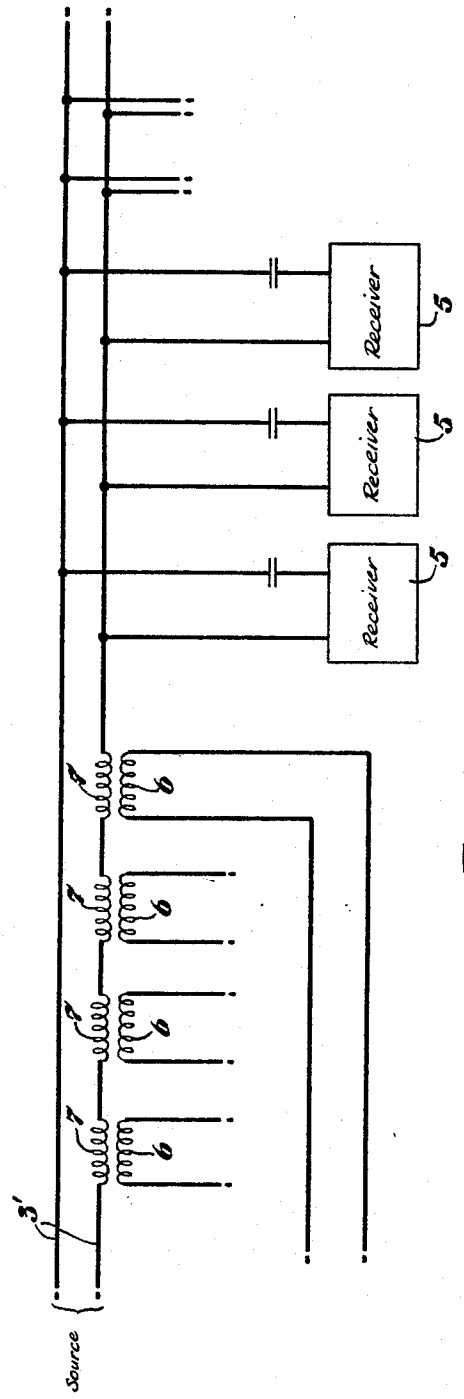

Fig. 3

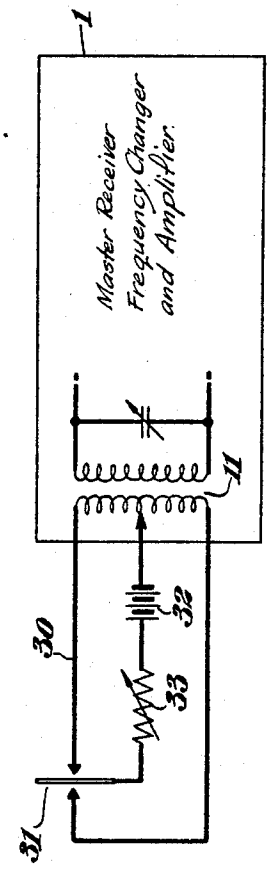

Fig. 4

INVENTOR
Melvin B. Benson,
BY
Bartlett Eyre Scott & Keel,
ATTORNEYS

250 BARNES ENERGY.

Examiner

Patented Jan. 5, 1932 1,840,013

UNITED STATES PATENT OFFICE

MELVIN BERNARD BENSON, OF NEW YORK, N. Y., ASSIGNOR TO MELVIN B. BENSON CORPORATION, OF NEW YORK, N. Y., A CORPORATION OF NEW YORK

RADIO RECEIVING AND REPRODUCTION SYSTEM

Application filed February 10, 1930. Serial No. 427,092.

This invention relates to radio receiving and detecting systems particularly adapted for use in hotels, and the like and in other locations where one or more broadcasted programs may be selectively received at a central station and relayed to a multiplicity of receiving points simultaneously to be there selectively received.

Systems have been proposed wherein one or more master receiving sets are utilized for receiving programs, with loud speakers distributed in different rooms or at different points together with means for connecting them up with the different receiving sets, but systems of this character are not entirely satisfactory and are expensive to install by reason of the multiplicity of circuits required leading from the central station to the receiving points and by the means necessary for amplifying the audio-frequency currents transmitted. Also systems involving the multiplication of either or both the receiving sets and the aerials are generally impractical.

The object of the present invention is a radio receiving and detecting system for the above indicated purpose which is characterized by the simplicity in wiring and apparatus required, by the economy in installation cost and generally by the satisfactory operation thereof. To this end I detect and receive broadcasted programs at a central station or point, convert the radio frequency currents received into radio frequency carrier currents of substantially lower and widely differing frequencies and then transmit these radio frequency currents to the various rooms or points where audio frequency receiving sets are disposed which are capable of being selectively tuned to the various frequencies coming over the transmitting wire or wires. Ordinarily I need utilize only one wire between the multireceiving sets at the central station and the audio frequency sets in the various rooms, this common carrier wire being utilized for the transmission of the radio frequency carrier currents differing widely in the frequencies. I may utilize the ordinary house lighting wires for transmitting these radio frequency carrier currents. The radio frequency currents received from the air are induced into this common carrier by a frequency changer for each receiving set at the central station or point. The frequency of this secondary current differs from the frequency of any of the other secondary currents induced in the common carrier by the other sets and the frequencies of these secondary radio currents must not be multiples of each other in order to avoid harmonic interference. Certain of the advantages of my system may be obtained without the conversion of the detected radio frequency currents into lower frequencies, but in the preferred method and apparatus means are devised for this conversion, which permits of a greater number of programs to be received simultaneously over this one common circuit and does not require an elaborate or expensive receiving apparatus in the individual rooms. Moreover, the radio frequency carrier currents are of considerably lower frequency than the originally received radio frequency currents which also simplifies the reception apparatus, and the audio frequency receiving sets at the various points or in the various rooms may be of the simplest character due to the fact that they are required to handle only low and widely differing frequencies.

For a better understanding of the above indicated and other novel features of the invention reference may be had to the accompanying drawings wherein:

Fig. 1 is a diagrammatic view illustrating the general plan of my invention;

Fig. 2 is a diagrammatic view indicating the essentials of one of the circuits with certain elements thereof omitted for convenience;

Fig. 3 is a view illustrating the use of the house wiring; and

Fig. 4 shows another application of the invention.

Referring to Fig. 1 of the drawings I have indicated my system as including a multiple number of master receiving frequency changer and amplifier sets 1, in the particular embodiment shown there being four of such sets indicated, although they may be

multiplied if desired. Each master set is provided with the standard aerial 2 to receive the radio waves in the usual manner. The radio frequency currents which are detected are both amplified and preferably modified as to frequency. For example, within the permitted broadcasting band of from 200 to 546 meters the frequencies vary from approximately 1,500,000 cycles to more than 500,000 cycles. These frequencies for the above indicated reasons are not best suited to reproduction purposes, and accordingly I convert these frequencies into lower and more suitable frequencies. For this purpose I may utilize the superheterodyne principle in this conversion which consists in superimposing upon the high radio frequencies received other frequencies to obtain beat frequencies of a character suitable for my purpose. For example, I am able to obtain frequencies of any value desired, even as low as the audio spectrum. Having thus obtained radio frequency carrier currents of the desired frequency these are superposed upon a common wiring system indicated by the numeral 3, this common wiring system leading through the branch conductors 4 to the various rooms or other points where the radio receiving sets 5 are located. I have indicated diagrammatically transformer primaries 6 connected with the various master receiving sets and transformer secondaries 7 connected in series with this system 3 for inducing the radio frequency carrier currents on the wiring system 3. Condensers 8 are connected across these secondaries. The radio receiving sets 5 may be of extremely simple character, the radio frequency carrier currents being converted immediately into audio-frequency currents upon their entry into the sets 5.

Referring to Fig. 2 the incoming signal is picked up on aerial 2 and transferred to grid of tube 10 by means of transformer 11. This signal is amplified and transferred to circuit 12 through tube 10. Inserted in circuit 12 is a secondary 13 of a transformer. The frequency of the oscillating current in this secondary is determined by the inductance 14 and capacity of condenser 15, the current being generated by oscillator tube 16. The difference in frequencies between the oscillator current and the incoming signal current gives the beat frequency which is receptive to transformer 17, the latter being tuned thereto. This current of the beat frequency is amplified by tube 18 and transferred to the common carrier circuit 3 through transformer 6, 7. The radio receiving set 5 comprises an inductive coupling in the form of transformer 19 which is tuned by variable condenser 20, the current reaching the detecting tube 21 through grid leak and condenser 22 where it is rectified and converted to an audio-frequency current. This audio-frequency is amplified by detector tube 21, transformer 23 and audio-amplifier tube 24. Any standard loud speaker or earphones may be employed. I have indicated diagrammatically a loud speaker 25. The diagrams are purposely diagrammatic and the standard details, such for example as the A battery, the B battery, etc., are omitted for convenience, though I have indicated in the drawings the leads to be connected with the B battery, these leads being designated by the letter B. The operation can be understood from the above. The master sets 1 may be tuned to receive programs on different wave lengths and frequencies and these sets are so adjusted and designed as to impose upon the common carrier circuit 3 radio frequency currents of predetermined frequencies and each of the sets 5 is adapted to be tuned in to be receptive to the radio frequency currents corresponding to any one of the master sets. These predetermined frequencies to be superimposed upon the common circuit 3 must be sufficiently different from each other to avoid beat frequencies between these predetermined frequencies within the audio spectrum and preferably also they are selected in such a manner as to avoid beat frequencies in turn between these beat frequencies which would come within the audio spectrum. For example, the beat frequencies to be imposed upon the common carrier circuit 3 by the various master sets may be 176,300, 123,400, 90,000 and 74,000 cycles. These frequencies which are imposed on the common wire are given as examples merely and it is understood that other suitable frequencies may be selected. All of these sets may be tuned in at one time to impose all these radio frequency currents simultaneously upon the common carrier wire or wires. Moreover, all of the sets 5 no matter how numerous may be tuned in simultaneously without overloading the common carrier 3 and the master sets since the common wire 3 and the master sets are only required to handle radio frequency currents which are of very small value, each of the sets 5 taking care of and handling its own audio-frequency currents.

While I have shown in the drawings a common wire 3 leading from the central station to the multiple loud speaker sets at distant points it is understood that this wire may be the ordinary house lighting wires. For example, I have indicated in Fig. 3 an ordinary house wiring circuit 26, with the secondaries 7 of the inductive couplings 6, 7 of the master sets connected in one of the lines, and I have indicated one of the radio sets 5 as connected across the line 26, a condenser 27 being connected in the circuit to avoid short circuits. The receiving sets 5 may be, of course, tapped into the lighting circuit 26 at any point desired, as for example in the room of the hotel

250. RADIANT ENERGY.
20
Examiner

or other building and tuned in to receive any of the programs being received by the master sets.

My invention is applicable to public address systems and the like as well as to reception of broadcasted programs. For example, I have indicated in Fig. 4 a master set 1 as being inductively coupled through the transformer 11 with a microphone circuit 30 including a microphone 31 of any suitable form with a battery 32 connected between an intermediate point of the primary of the transformer 11 and the microphone 31 with a variable resistance 33 in the circuit.

I claim:

1. A radio receiving system including a multiplicity of radio frequency receiving means, each of said means including means for amplifying the signal currents and reducing the frequencies of the radio frequency currents received to a predetermined value above the audio spectrum, the receiving means being adjusted to widely different output radio frequencies, a common carrier circuit for relaying the converted radio frequency currents to a multiplicity of remote points and inductive coupling means between said common carrier circuit and each of the receiving means and a multiplicity of audio-frequency reproducing means connected with the said common carrier circuit and adapted to be tuned to the converted frequency of any of the radio frequency receiving means.

2. A radio receiving system including a multiplicity of radio frequency receiving means, each of said means including means for amplifying the signal currents and reducing the frequencies of the radio frequency currents received to a predetermined value above the audio spectrum, the receiving means being adjusted to widely different output radio frequencies, a common carrier circuit for relaying the converted radio frequency currents to a multiplicity of remote points and inductive coupling means between said common carrier circuit and each of the receiving means and means at a multiplicity of points enabling audio-frequency reproduction means to be connected in and tuned to any of the radio frequency currents imposed on the common circuit.

3. A radio receiving system including a multiplicity of radio frequency receiving means, each of said means including means for amplifying the signal currents and reducing the frequencies of the radio frequency currents received to a predetermined value above the audio spectrum, the receiving means being constructed for output radio frequencies differing from each other in a manner to avoid beat frequencies therebetween within the audio spectrum, a common carrier circuit for relaying the converted radio frequency currents to a multiplicity of remote points and inductive coupling means between said common carrier circuit and each of the receiving means and means at a multiplicity of points enabling audio-frequency reproduction means to be connected in and tuned to any of the radio frequency currents imposed on the common circuit.

In testimony whereof, I have signed my name to this specification.

MELVIN B. BENSON.