(12) INTERNATIONAL APPLICATION PUBLISHED UNDER THE PATENT COOPERATION TREATY (PCT)

(19) World Intellectual Property Organization
International Bureau

(43) International Publication Date
13 December 2001 (13.12.2001)

PCT

(10) International Publication Number
WO 01/95046 A1

(51) International Patent Classification[7]: G05D 23/13

(21) International Application Number: PCT/EP00/09250

(22) International Filing Date:
21 September 2000 (21.09.2000)

(25) Filing Language: English

(26) Publication Language: English

(30) Priority Data:
TO2000A000532 6 June 2000 (06.06.2000) IT

(71) Applicant *(for all designated States except US)*: **MASCO CORPORATION OF INDIANA** [US/US]; 55 East 111th Street, Indianapolis, IN 46280 (US).

(72) Inventor; and

(75) Inventor/Applicant *(for US only)*: **KNAPP, Francesco** [DE/IT]; Via Giacomo Leopardi 28, I-27061 Cava Manara (IT).

(74) Agents: **OPPERMANN, Ewald** et al.; Oppermann & Oppermann, Am Wiesengrund 35, 63075 Offenbach (DE).

(81) Designated States *(national)*: AE, AG, AL, AM, AT, AU, AZ, BA, BB, BG, BR, BY, BZ, CA, CH, CN, CR, CU, CZ, DE, DK, DM, DZ, EE, ES, FI, GB, GD, GE, GH, GM, HR, HU, ID, IL, IN, IS, JP, KE, KG, KP, KR, KZ, LC, LK, LR, LS, LT, LU, LV, MA, MD, MG, MK, MN, MW, MX, MZ, NO, NZ, PL, PT, RO, RU, SD, SE, SG, SI, SK, SL, TJ, TM, TR, TT, TZ, UA, UG, US, UZ, VN, YU, ZA, ZW.

(84) Designated States *(regional)*: ARIPO patent (GH, GM, KE, LS, MW, MZ, SD, SL, SZ, TZ, UG, ZW), Eurasian patent (AM, AZ, BY, KG, KZ, MD, RU, TJ, TM), European patent (AT, BE, CH, CY, DE, DK, ES, FI, FR, GB, GR, IE, IT, LU, MC, NL, PT, SE), OAPI patent (BF, BJ, CF, CG, CI, CM, GA, GN, GW, ML, MR, NE, SN, TD, TG).

Published:
— *with international search report*

For two-letter codes and other abbreviations, refer to the "Guidance Notes on Codes and Abbreviations" appearing at the beginning of each regular issue of the PCT Gazette.

(54) Title: MIXING FAUCET USING THERMOSTATIC CARTRIDGE WITH CLOSING UPSTREAM FROM CARTRIDGE

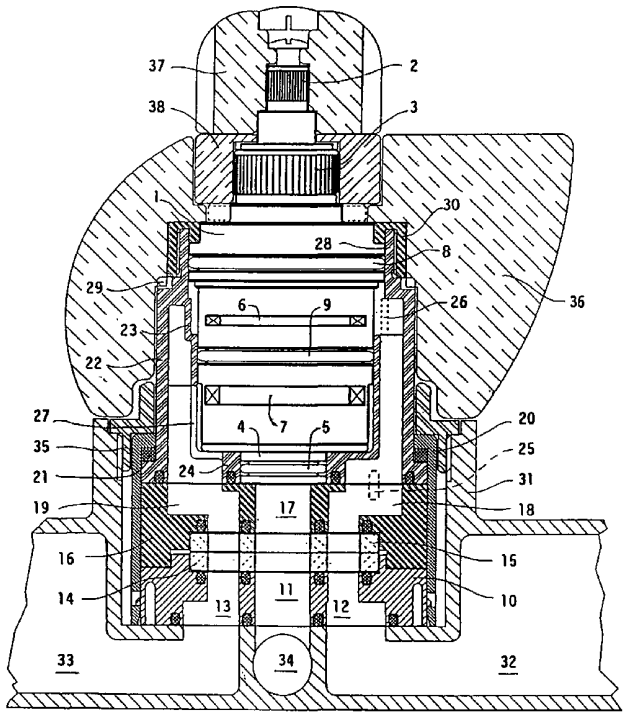

(57) Abstract: A thermostatic mixing faucet is disclosed, which comprises a thermostatic mechanism and an obturating device with thin plates (14, 15) made of hard material placed upstream from the thermostatic mechanism. The obturating device is included in a body intended to be permanently applied to a water supply and dispensation collector, and the thermostatic mechanism is included in a cartridge (1-9) capable of being inserted in and extracted from the body, which can be a commercially available or standardized cartridge. The body is so arranged as to be able to be installed on a normal supply and tapping collector (31) outside or fitted in. The body comprises a stationary member (10) presenting an intake and delivery opening (11-13) and bearing a fixed obturation plate (14) made of hard material and a rotatable case (22-23) that is integral as it rotates with a rotatable member (16) and is so arranged so as to receive the cartridge (1-9) containing the thermostatic mechanism in a removable manner. The stationary member (10), the rotatable member (16) and the rotatable case (22-23) are all held together by a connecting collar (20) provided with a washer (21) made up of a material that has a low wear-and-tear coefficient. The cartridge (1-9) is fixed in the rotatable case (22-23) by means of a screwed collar (28) or it is otherwise applied to the rotatable case (22-23).

WO 01/95046 A1

MIXING FAUCET USING THERMOSTATIC CARTRIDGE WITH CLOSING UPSTREAM FROM CARTRIDGE

TECHNICAL FIELD

This invention relates to a thermostatic mixing device presenting closing means that are situated upstream from the thermostatic mechanism.

BACKGROUND OF THE DISCLOSURE

The most common thermostatic mixing faucets have a thermostatic mechanism which can be equipped with a cartridge or which can be directly assembled in a body and closing means that are situated downstream from the thermostatic mechanism. This means that the faucet must be provided with nonreturn valves to prevent the possibility of reflux between the cold-water and hot-water intake pipes. This is an inconvenience due to the cost of the nonreturn valves, due to the difficulties encountered in their inspection and repair or substitution and because these valves are rather difficult to render compatible with the forms of execution that involve fitting into the thermostatic mixing faucet.

Furthermore, thermostatic mechanisms from time to time require inspection, cleaning and possible repair or substitution of parts, and so that they may be subjected to such operations without interrupting the general flow of waters, the faucet must also be provided with stop valves. This is also an inconvenience because what was said above also applies to the stop valves with respect to the inconveniences inherent in the nonreturn valves. In general, therefore, one must install both the nonreturn valves and the stop valves; in certain forms of

improved execution, the nonreturn valves themselves can also be used as stop valves and that somewhat reduces the mentioned inconveniences, but it does not eliminate them.

In order at least partially to remedy these inconveniences, there have been proposals, for example, according to United States Patent No. 3,792,812, disclosing forms of execution in which an obturating means is situated upstream from the thermostatic mechanism. This means that there is no need for any nonreturn valves. Furthermore, the mechanism need be dismantled only partially, leaving in place in the body of the faucet the obturating member which is in an intercept position; it is thus possible to extract the various parts of the thermostatic mechanism in order to inspect them, clean them, repair or replace them without having to provide stop valves to perform this operation. However, similar operations involve the disassembly and reassembly of the delicate thermostatic mechanism and they can therefore be performed only by persons having a particular skill level, both as regards the correct reassembly of the parts and also in order to restore the correct setting of the thermostatic mechanism which, naturally, is lost due to the dismantling of the mechanism. Furthermore, in these faucets, the hold of the obturating member is established by means of ring-shaped packings made of elastomer material whose service life and effectiveness are limited.

According to European Patent No. 0 560 737, the following is proposed: A cartridge comprises a thermostatic mechanism and a closing device working -- by means of obturation plates made of hard material -- upstream from the thermostatic mechanism. In this case, likewise, there is no need for any nonreturn valves, but the extraction of the cartridge for proper inspection, cleaning and possible substitution requires the presence of

stop valves or the general interruption of water supply flow.

According to International Application WO 96/35280, the two above-mentioned concepts are in a certain manner combined in a device that comprises an obturation cartridge with thin plates made of hard material and a thermostatic mechanism in which the obturation cartridge situated upstream from the thermostatic mechanism can be left in place in the body of the faucet in a condition of intercept and makes it possible to dismantle the parts constituting the thermostatic device for proper inspection, cleaning, repair or substitution. There is no need for any nonreturn valves nor for any stop valves, but for the reasons given above, the operations involving the thermostatic mechanism must be performed by personnel having special skills and entail a loss of the preexisting setting.

The general purpose of this invention is to provide a thermostatic mixing faucet that will eliminate the inconveniences found in the above-mentioned forms of execution. More specifically, the invention intends to provide a thermostatic mixing faucet in which closing takes place upstream from the thermostatic mechanism so as not to require the presence of nonreturn valves, where the closing must take place with the employment of means capable of being left in place in a condition of intercept during the act of removal of the thermostatic mechanism so as not to require the presence of stop valves and in which the thermostatic mechanism can be removed as a whole without having recourse to any dismantling of its parts so that the operation can be performed by personnel not having any special skills and will not lead to the loss of the preexisting setting.

One particular purpose of the invention is to provide such a

thermostatic mixing faucet in which the entire thermostatic mechanism will be made in the form of a cartridge that can be inserted in a body that can be applied upon a water supply and tapping collector both by way of external assembly or by fitted-in assembly. Another more particular purpose of the invention is to provide such a thermostatic mixing faucet where it is not necessary for the thermostatic cartridge to be specially designed and built but where, instead one can use a commercially available of standardized thermostatic cartridge manufactured in large series for the usual thermostatic mixers, hence easily repairable and available at low cost. Another very special aspect of the invention is to provide such a thermostatic mixing faucet in which, when suggested by special reasons, the thermostatic cartridge can be replaced by a progressive cartridge or with a cartridge of another type. Yet another purpose of the invention is to provide such a thermostatic mixing faucet that can be mounted on an existing water supply and tapping collector in place of the usual thermostatic faucet and possibly by way of substitution of a customary, previously installed thermostatic faucet. Yet another purpose of the invention is to provide such a thermostatic mixing faucet whose manufacture will not cause any special difficulties and can be performed under technologically and economically favorable conditions.

SUMMARY OF THE DISCLOSURE

The main purpose of the invention is attained in a thermostatic mixing faucet comprising a thermostatic mechanism and an obturating device arranged upstream from the thermostatic mechanism by virtue of the fact that said obturating device is included in a body intended to be permanently applied to a water supply and tapping collector and that said thermostatic

mechanism is included in a cartridge that can be inserted in or extracted from said body.

In this way, the presence of the obturating device, situated upstream from the thermostatic device, avoids the need for installing nonreturn valves, and the fact that said obturating device is permanently linked to the water supply and tapping collector ensures the possibility of removing the thermostatic mechanism that has the character of a cartridge, leaving the obturator device in the intercept condition without any need for interrupting the general water supply nor putting in stop valves. The fact that the thermostatic mechanism is included in a removable cartridge means that the operations involving removal for inspection and cleaning and subsequently reinsertion can be performed by personnel without any special skills and without any loss of the preexisting setting. Repairs, when necessary, can be performed by replacing the cartridge containing the thermostatic mechanism with another cartridge, which can be previously set, so that the entire operation, which can be performed by any water system worker, requires minimum time and labor and leads to an exemplary result. If it is not simply discarded, the removed cartridge can be repaired in the workshop with suitable means and by expert personnel.

A preferred embodiment of said obturator employs thin obturation plates made of hard material, for example, ceramic material. The employment of an obturating device using thin plates made of hard material ensures its effective action over a long period of time without any need for any work on it, in other words, it makes the obturating device particularly suitable for permanent connection to the water supply and delivery connector.

In other embodiments, the obturating device employs a thin obturating plate cooperating with sleeves made of elastomer material stressed by elastic members or elastic parts or with holding packings anchored to a support.

Preferably, said body is so arranged as to receive a thermostatic mechanism contained in a commercially available or standardized cartridge. By "commercially available or standardized cartridge" a cartridge is meant which contains a thermostatic mechanism not specifically and exclusively designed for the thermostatic mixing faucet involved in the invention but intended to be employed in currently available types of thermostatic mixers. These cartridges can be produced in large series, which makes it possible to combine good quality and reduced cost and which, furthermore, ensures their general repairability. The substitution of the cartridge containing the thermostatic mechanism is thus facilitated in the best possible fashion and is made as inexpensive as possible.

This body opportunely comprises a stationary member presenting intake and delivery openings and bearing a fixed part of the obturating device, a rotary member bearing a mobile part of the obturating device and a rotatable case integral when in rotation with said rotatable member and so arranged as to receive in a removable manner the cartridge that contains the thermostatic mechanism. Said rotatable case is provided with means for the employment of a rotation control lever.

Advantageously, the stationary member, the rotatable member and the rotatable case are held together by a connecting collar provided with a washer consisting of material with a low wear-

and-tear coefficient. The cartridge is fixed in said rotatable case by means of a screwed collar or a collar that is otherwise applied upon the rotatable case.

These and other features, purposes and advantages of the object of this invention will appear more clearly in the following description of a preferred embodiment which, however, constitutes a nonrestrictive example with reference to the attached drawings.

BRIEF DESCRIPTION OF THE DRAWINGS

Reference now is made to the accompanying drawings in which:

Figure 1 is a diametrical cross-section in a body that is a part of the thermostatic faucet according to the invention;

Figure 2 illustrates a collar to be applied to the body according to Figure 1 for the purpose of fixing the thermostatic mechanism in a removable manner;

Figure 3 is a side view illustrating a cartridge containing the thermostatic mechanism to be inserted in the body according to Figure 1 and to be fixed by means of the collar according to Figure 2;

Figures 1 to 3 are arranged with respect to each other so as to represent as a whole an exploded view of the thermostatic mixing faucet according to the invention;

Figure 4 is a diametrical cross-section of the entire thermostatic mixing faucet according to the invention, assembling the parts in the order shown in Figures 1 to 3; and

Figure 5 shows the entire object according to Figure 4, applied to a water supply and delivery collector and completed by an operating lever and a regulating knob.

DETAILED DESCRIPTION OF THE PREFERRED EMBODIMENT

Figure 3 shows a cartridge containing a thermostatic mechanism. As noted earlier in the preferred embodiment of the invention, the cartridge containing the thermostatic mechanism is a cartridge of the commercially available or standardized type and such is the cartridge shown in Figure 3. It must, however, be kept in mind that if one forgoes the advantages of using a commercially available or standardized cartridge, the invention can also be implemented by using a cartridge that is specially designed only for this particular form of use. The cartridge is illustrated in the form of an outside view because its internal structure is not involved in the application of the invention and can be of any kind. By way of example, it is noted that the structure of the cartridge can advantageously correspond to the structure described in European Patent No. 0 740 808, a description that must be considered as being included for purposes of reference.

As for the cartridge, of interest here only are its elements on which depend its relations with the outside. The cartridge comprises a cover 1 from which protrude (going from the upper end according to the drawings) a pin 2 with gear clutch intended to receive a knob for setting the temperature that the thermostatic mechanism must maintain in the mixed water that is drawn and a collar 3 also with gear clutch intended to receive a safety member by means of which one can opportunely limit the maximum value of the temperature that can be set. From the

opposite end of the just-mentioned cover 1 of the cartridge, there protrudes a connection 4 with retaining packing 5 by means of which the cartridge draws mixed water. Furthermore, cover 1 has openings 6 and 7 for the intake of water, respectively, cold and hot water, while a packing 8 is intended to establish a hold toward the outside and a packing 9 is intended to establish the hold between intake opening 6 for cold water and intake opening 7 for hot water.

Naturally, the cartridge illustrated here is a special type of commercially available cartridge, but various types of commercially available cartridges are available on the market and they can be used in a faucet according to the invention; the remaining parts of the faucet must obviously be designed in light of the particular type of cartridge that is to be used, in other words, whether it is a commercially available cartridge or a specifically designed and produced cartridge.

The body shown in Figure 1 comprises a stationary member 10 that is intended to be applied in any known manner to a power supply and delivery collector. Stationary member 10 has a central opening 11 for water delivery and two side openings 12 and 13, respectively, for the intake of cold and hot water. Furthermore, stationary member 10 has a seat in which there is installed a fixed obturation plate made of hard material 14, which has passage openings corresponding to those of the stationary member 10. Suitable packings establish the hold around said openings in the known manner.

In contact with said thin, fixed obturation plate 14, there is installed a mobile obturation plate made of hard material 15 which, with suitable retaining packing, is mounted in a seat of a rotary member 16 of the body of the faucet. In rotary member

16, there are provided passages 17, 18 and 19 in communication with corresponding packages in mobile obturation plate 15. Central passage 17 of rotary member 16 always corresponds to the delivery passage 11 of stationary member 10. In the open position (shown in the drawings), passages 18 and 19 of rotary member 16 correspond to passages 12 and 13 of stationary member 10, thus permitting the passage of water, whereas in an intercept position (not shown), which is achieved by turning the rotary member 16, said correspondence will be absent and this will therefore lead to the intercept of both of the intakes of cold and hot water.

The rotation of thin mobile obturation plate 15 with respect to fixed obturation plate 14 between the position illustrated, which shows complete intake and the position of intercept, regulates the water volume drawn by the thermostatic mixing faucet. To accomplish this regulation in the best possible fashion, thin fixed obturation plate 14 and thin mobile obturation plate 15 present openings that can be profiled in various ways that are well known in this technique.

However, in the thermostatic mixing faucet according to the invention, one can also use an obturating device of a type different from the one described, which would now employ thin plates made of hard material, for example, ceramic material. In particular, one can use for this purpose an obturating member that will cooperate with sleeves made of elastomer material stressed by elastic members or elastic parts such as, for example, those described in Italian Patent No. 1 288 732, or with packings anchored to a support such as those described in Italian Patent No. 1 288 719.

To rotary member 16, there is connected a rotary case intended

to contain cartridge 1-9. Stationary member 10, rotary member 16 and this rotatable case are held together by a connecting packing 20, preferably provided with a washer 21 that is made up of a material with a low wear-and-tear coefficient, assuring easy and regular rotation of rotary member 16 and of the rotary case.

The above-mentioned rotary case is preferably made in one piece, which can be produced by stamping of plastic material for faucets intended to work at low pressure or they can be made by means of metallic fusion for faucets intended to work at high pressure. The case comprises an outside wall 22 and an inside wall 23; the latter, as can be seen in Figure 1, is preferably designed in steps so as to facilitate its production and to correspond to the various diameters of the diverse parts of cartridge 1-9. Inside wall 23 ends on the bottom in a connection 24 suitable for receiving the water delivery connection 4 of cartridge 1-9, and this connection 24, just as outside wall 22, is linked to rotary member 16 with suitable retaining packings. Furthermore, a member drawn as a pin 25 but which can have any character makes rotary case 22-23 and rotary member 16 to rotate integrally. In inside wall 23, there are openings 26 and 27 corresponding to regions where, when cartridge 1-9 is inserted in inside wall 23 of rotary case 22-23, one places the inlet openings 6 and 7 of the cartridge. In this fashion, as one can see in Figure 4 when cartridge 1-9 is inserted in case 22-23, one creates separate intake ways for cold water and for hot water as well as for the delivery of mixed water throughout the entire faucet, where the intake ways can be regulated and, in particular, can be intercepted by the cooperating action of the thin obturating plates made of hard material 14 and 15.

Outside wall 22 and inside wall 23 of the rotary case end on top in a threaded collar 28 suitable for receiving the screwing of a packaging 30 shown in Figure 2, which is used to fix cartridge 1-9 in position between rotary case 22-23 as shown in Figure 4. Furthermore, outside wall 22 of the rotary case has recesses 29 intended to cooperate with an operating lever to permit the rotation of case 22-23 and, with it, the rotation of rotary member 16 and of thin mobile obturation plate 15 for the purpose of regulating the delivered flow volume and, in particular, the purpose of intercepting it.

Figure 5 shows how a faucet according to the invention, shown assembled in Figure 4, is installed on a collector and provided with operating and regulating members. The number 31 indicates a supply and delivery collector, which can have any usual shape and which comprises intake connections 32 and 33 for cold water and for hot water and a connection 34 for the delivery of mixed water. Body 10-20 of the thermostatic mixing faucet according to the invention is installed in collector 31 with its intake openings 12 and 13 communicating with the incoming connections 32 and 33 and with delivery opening 11 that communicates with delivery connection 34 and which is attached, for example, by means of a threaded packing 35, such as one would install any other thermostatic mixing faucet on the same collector. Body 10-20 can easily be given shapes and dimensions corresponding to those of commercially available thermostatic mixing faucets so that the faucet according to the invention can be installed on any suitable existing water supply and delivery collector even, as the case may be, by way of substitution of another preexisting thermostatic mixing faucet.

An operating lever 36 is then inserted in external wall 22 of rotary case 22-23, and engaging recesses 29, thus making it

possible to rotate case 22-23 and hence to regulate the volume of delivered water and, in particular, to intercept it. A regulating knob 37 is then mounted on the pin with the gear clutch 2 to permit the regulation of the stabilized temperature of the thermostatic mechanism of cartridge 1-9. Opportunely, a stopping member 38 is inserted on the collar with gear clutch 3 to cooperate in a very well-known manner with regulating knob 37 in order for safety reasons to limit the maximum value of the temperature that can be set by means of knob 37.

Once thus installed, the thermostatic mixing faucet involved in the invention works like any other thermostatic mixing faucet; the temperature of the delivered water can be set by means of knob 37 and the flow volume drawn is regulated and intercepted by means of operating lever 36.

When there is a need for inspecting the thermostatic mechanism, the faucet is put in the intercept condition, then knob 37, stopping member 38 and operating lever 36 are removed. It is now possible to unscrew packing 30 and to extract cartridge 1-9, which contains the thermostatic mechanism in order to subject it to any kind of inspection or cleaning operation, then to reinstall the cartridge and the operating and regulating members without having lost the preexisting setting. If, then, inspection shows that the cartridge requires repair or replacement, it can be simply replaced with a new cartridge that was previously set at the right figure and that is then thrown away or sent to a workshop for repair.

Therefore, as a result of the invention, closing takes place upstream from the thermostatic mechanism and there is no need for installing any nonreturn valves and closing is performed by parts that are installed in a stable fashion and there is no

need for any stop valves; the thermostatic mechanism in the shape of a cartridge can be removed as a whole without having to dismantle it so that all inspection and replacement operations involving the thermostatic mechanism are reduced to maximum simplicity and can be performed rapidly by personnel without any special skills. The cartridge containing the thermostatic mechanism can, if so desired, be a commercially available or standardized cartridge, and the faucet can be installed on any ordinary collector, both outside or fitted in. Furthermore, the implementation of the characteristic parts of the thermostatic mixing faucet of the invention does not entail any special technological or economic problem. Therefore, the invention in the best possible fashion eliminates the inconveniences inherent in prior technique.

A particular effect of using the invention consists in the fact that when suggested for special reasons, one can forgo the advantages of thermostatic operation and instead obtain the advantages of progressive operation by simply replacing the thermostatic cartridge with a progressive cartridge by substantially applying the fundamental concept disclosed in Italian Patent Application No. TO 98 A 000 379; or it is also possible to install a cartridge of another type in place of the thermostatic cartridge.

A thermostatic mixing faucet is disclosed, which comprises a thermostatic mechanism and an obturating device with thin plates made of hard material placed upstream from the thermostatic mechanism. The obturating device is included in a body intended to be permanently applied to a water supply and dispensation collector, and the thermostatic mechanism is included in a cartridge capable of being inserted in and extracted from the body, which can be a commercially available

or standardized cartridge. The body is so arranged as to be able to be installed on a normal supply and tapping collector outside or fitted in. The body comprises a stationary member presenting an intake and delivery opening and bearing a fixed obturation plate made of hard material and a rotatable case that is integral as it rotates with a rotatable member and is so arranged so as to receive the cartridge containing the thermostatic mechanism in a removable manner. The stationary member, the rotatable member and the rotatable case are all held together by a connecting collar provided with a washer made up of a material that has a low wear-and-tear coefficient. The cartridge is fixed in the rotatable case by means of a screwed collar or it is otherwise applied to the rotatable case.

It is understood that the invention is not confined to the embodiment described and illustrated here by way of example. Some possible quantifications were cited and others are within the reach of the expert in the field; for example, packing 30 can be removably applied upon rotatable case 22-23 in a manner different from the screwing action; and means for employment between rotary case 22-23 and operating lever 36 can be different from recesses 29.

These changes and any substitution with technical equivalents can be applied to what was described and illustrated above without going beyond the framework of the invention and the scope of this patent as defined by the appended claims.

CLAIMS:

1. Thermostatic mixing faucet comprising a thermostatic mechanism and an obturating device arranged upstream from the thermostatic mechanism, characterized in that said obturating device is included in a body intended to be permanently applied to a water supply and dispensation collector, and that said thermostatic mechanism is included in a cartridge capable of being inserted in and extracted from said body.

2. Thermostatic mixing faucet according to Claim 1, characterized in that said obturating device employs thin obturating plates made of hard material, for example, ceramic material.

3. Thermostatic mixing faucet according to Claim 1, characterized in that said obturating device employs an obturating member cooperating with sleeves made up of elastomeric material and stressed by elastic members or elastic parts or with packings anchored upon a support.

4. Thermostatic mixing faucet according to Claim 1, characterized in that said body is arranged to receive a thermostatic mechanism contained in a commercially available or standardized cartridge.

5. Thermostatic mixing faucet according to Claim 1, characterized in that said body is so arranged as to be installed on an ordinary water supply and delivery collector outside or inside.

6. Thermostatic mixing faucet according to Claim 1, characterized in that said body comprises a stationary member

presenting intake and delivery openings and bearing a fixed part of the obturating device, a rotary member bearing a mobile part of the operating device and a rotary case, which is integral in rotation with said rotary member and which is so arranged as to receive the cartridge containing the thermostatic mechanism in a removable manner.

7. Thermostatic mixing faucet according to Claim 6, characterized in that said rotary case is provided with means for the use of a rotary operating lever.

8. Thermostatic mixing faucet according to Claim 6, characterized in that said cartridge is attached in said rotary case by means of a screwed packing or that it is otherwise applied to the rotary case.

9. Thermostatic mixing faucet according to Claim 6, characterized in that said stationary member, said rotary member and said rotary case are held together by a connecting packing provided with a washer made up of material with a low wear-and-tear coefficient.

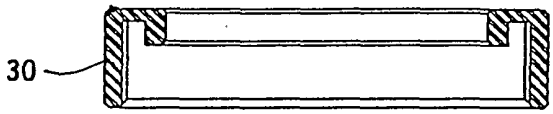

FIG. 2

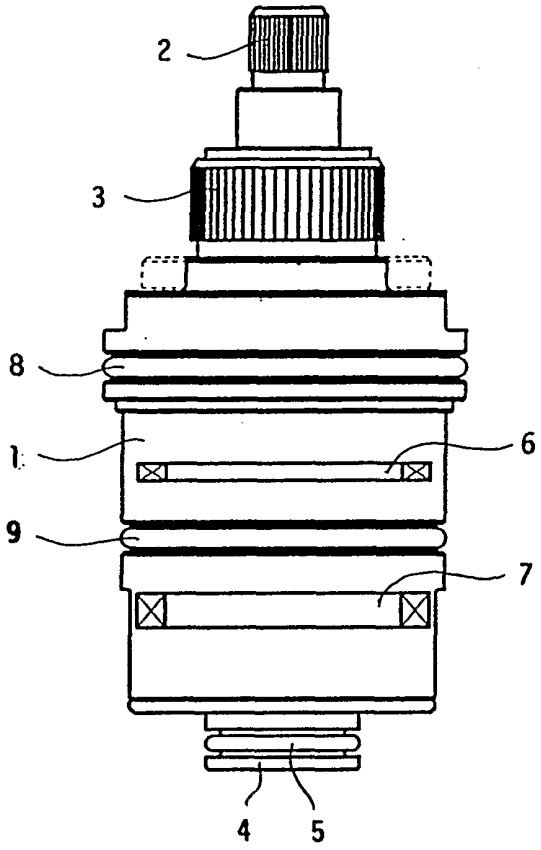

FIG. 3

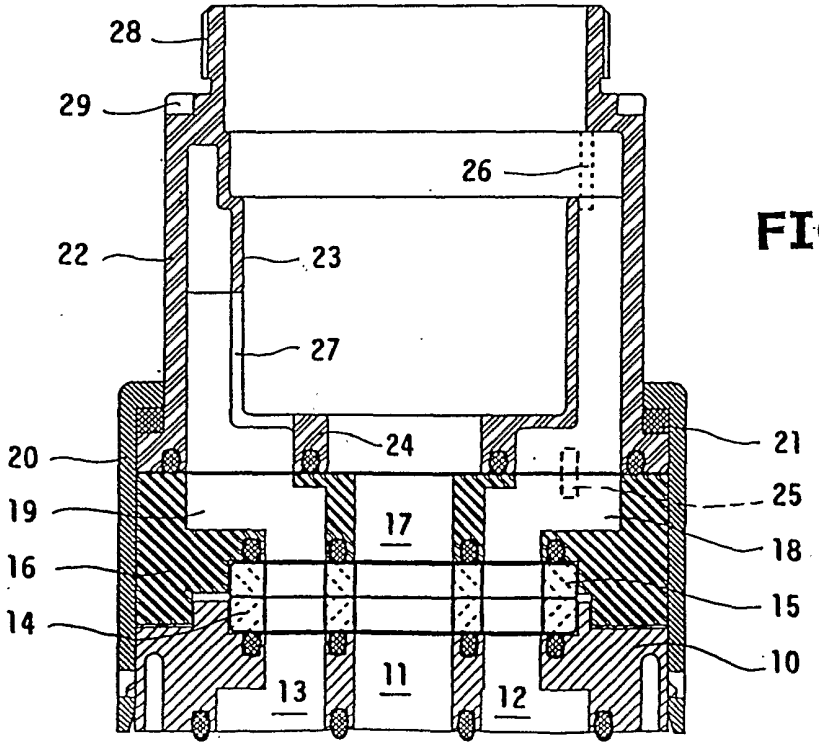

FIG. 1

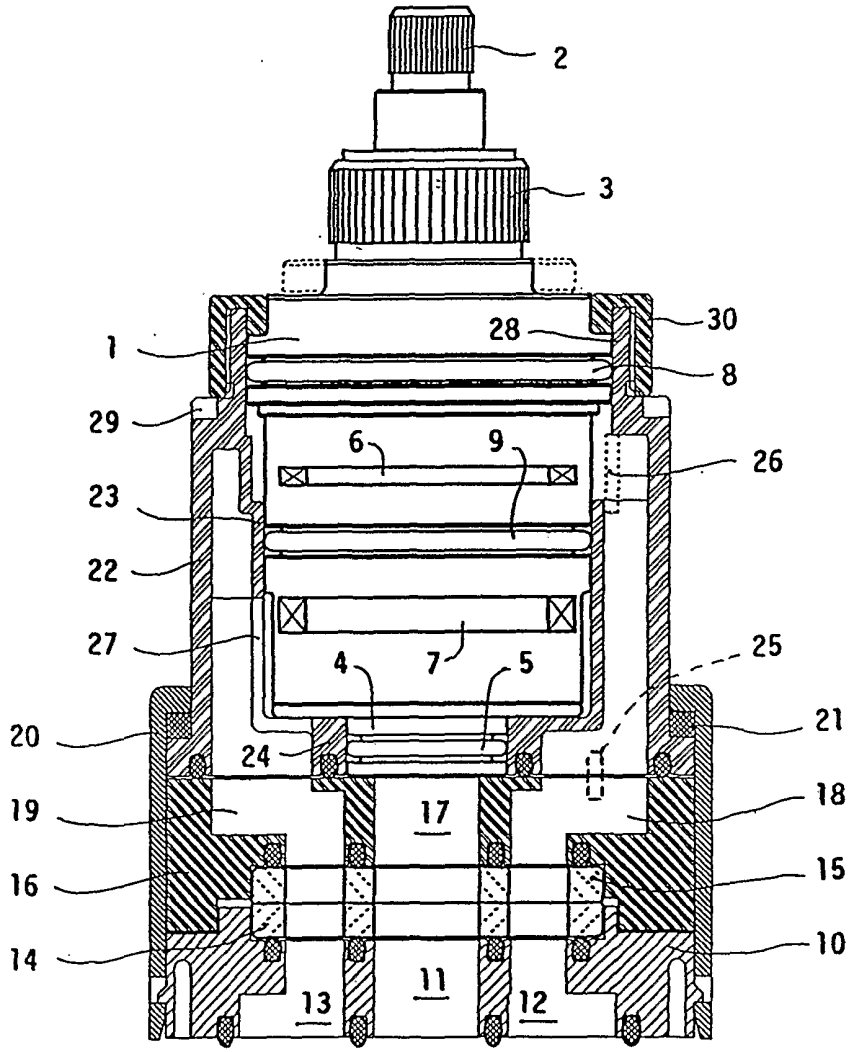
2
3
1
28
30
8
29
6
9
26
23
22
27
4
7
5
25
20
24
21
19
17
18
16
15
14
10
13
11
12

FIG. 4

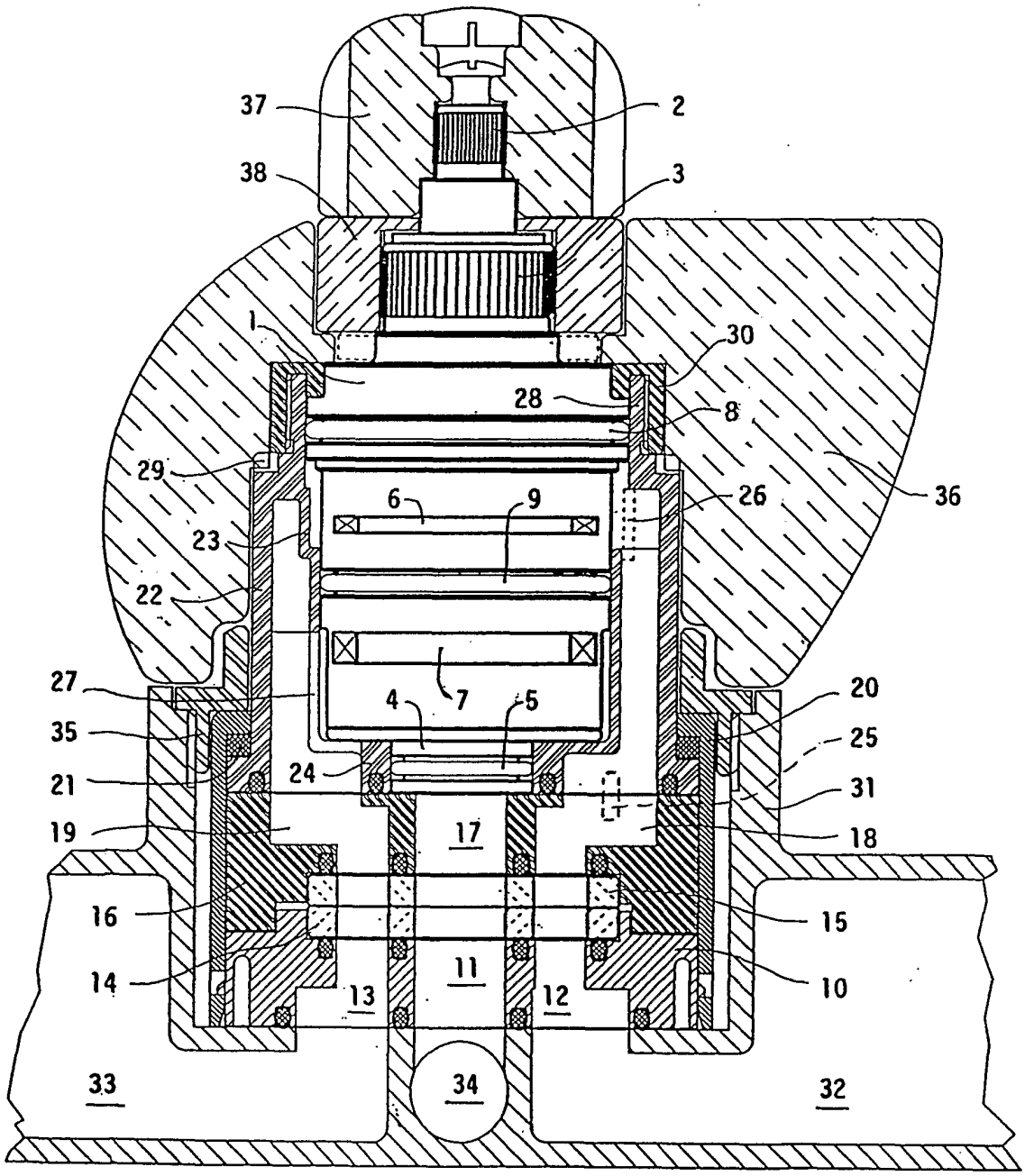
37
2
38
3
1
30
28
8
29
36
6
9
26
23
22
27
4
7
5
20
35
25
24
21
31
19
17
18
16
15
14
11
10
13
12
33
34
32

FIG. 5

INTERNATIONAL SEARCH REPORT

Int nal Application No
PCT/EP 00/09250

A. CLASSIFICATION OF SUBJECT MATTER
IPC 7 G05D23/13

According to International Patent Classification (IPC) or to both national classification and IPC

B. FIELDS SEARCHED

Minimum documentation searched (classification system followed by classification symbols)
IPC 7 G05D

Documentation searched other than minimum documentation to the extent that such documents are included in the fields searched

Electronic data base consulted during the international search (name of data base and, where practical, search terms used)
WPI Data, PAJ, EPO-Internal

C. DOCUMENTS CONSIDERED TO BE RELEVANT

Category °	Citation of document, with indication, where appropriate, of the relevant passages	Relevant to claim No.
X	WO 98 35280 A (OFFICINA MECCANICA RUGA OSVALDO) 13 August 1998 (1998-08-13) cited in the application page 3, line 5 - line 19 page 6, line 26 - line 35; figures 1-5	1,2,4-9
X	DE 41 20 024 A (IDEAL-STANDARD GMBH) 10 December 1992 (1992-12-10) column 4, line 19 -column 7, line 46; figures 1,2	1,2,5
A	EP 0 611 260 A (GALATRON) 17 August 1994 (1994-08-17) column 1, line 25 -column 2, line 14; figures 1,2	1

☐ Further documents are listed in the continuation of box C.

☒ Patent family members are listed in annex.

° Special categories of cited documents :

"A" document defining the general state of the art which is not considered to be of particular relevance

"E" earlier document but published on or after the international filing date

"L" document which may throw doubts on priority claim(s) or which is cited to establish the publication date of another citation or other special reason (as specified)

"O" document referring to an oral disclosure, use, exhibition or other means

"P" document published prior to the international filing date but later than the priority date claimed

"T" later document published after the international filing date or priority date and not in conflict with the application but cited to understand the principle or theory underlying the invention

"X" document of particular relevance; the claimed invention cannot be considered novel or cannot be considered to involve an inventive step when the document is taken alone

"Y" document of particular relevance; the claimed invention cannot be considered to involve an inventive step when the document is combined with one or more other such documents, such combination being obvious to a person skilled in the art.

"&" document member of the same patent family

Date of the actual completion of the international search	Date of mailing of the international search report
2 February 2001	13/02/2001

Name and mailing address of the ISA	Authorized officer
European Patent Office, P.B. 5818 Patentlaan 2 NL – 2280 HV Rijswijk Tel. (+31–70) 340–2040, Tx. 31 651 epo nl, Fax: (+31–70) 340–3016	Goetz, P

INTERNATIONAL SEARCH REPORT

information on patent family members

Int onal Application No
PCT/EP 00/09250

Patent document cited in search report	Publication date	Patent family member(s)	Publication date
WO 9835280 A	13-08-1998	IT MI970238 A	06-08-1998
		AU 5878198 A	26-08-1998
		EP 0958534 A	24-11-1999
DE 4120024 A	10-12-1992	AT 142357 T	15-09-1996
		AU 1877792 A	12-01-1993
		DE 59207070 D	10-10-1996
		WO 9222862 A	23-12-1992
		EP 0647337 A	12-04-1995
		JP 2645179 B	25-08-1997
		JP 6507961 T	08-09-1994
		KR 133684 B	23-04-1998
		US 5370305 A	06-12-1994
EP 611260 A	17-08-1994	IT 1262699 B	04-07-1996
		AU 5487194 A	11-08-1994
		JP 6281030 A	07-10-1994
		US 5433378 A	18-07-1995