US 20040040228A1

(19) United States

(12) Patent Application Publication (10) Pub. No.: US 2004/0040228 A1

Emde et al. (43) Pub. Date: Mar. 4, 2004

(54) SANDWICH-LIKE PANEL ELEMENT

(76) Inventors: **Thomas Emde**, Frankfurt/Main (DE); **Heinrich Robert Pohl**, Koln (DE)

Correspondence Address:
HOFFMAN WASSON & GITLER
2361 JEFFERSON DAVIS HIGHWAY
SUITE 522
ARLINGTON, VA 22202

(21) Appl. No.: **10/450,442**

(22) PCT Filed: **Dec. 20, 2001**

(86) PCT No.: **PCT/EP01/15102**

(30) **Foreign Application Priority Data**

Dec. 22, 2000 (DE)..... 10064744.8
Apr. 6, 2001 (DE)..... 10117104.8

Publication Classification

(51) **Int. Cl.**[7] **E04D 13/18**; E04H 14/00; E04C 2/54

(52) **U.S. Cl.** **52/173.3**; 52/786.11

(57) **ABSTRACT**

The invention relates to a sandwich-like panel element (**100**) comprising at least two panels (**102, 103**) and a lighting device with at least one lighting means (**106**), said light irradiating in the front part of at least one panel (**102, 103**), wherein said light is at least partly deflected approximately perpendicular to said direction of irradiation and is projected over the surface of at least one of said panels, which has a transparent configuration, due to the fact that said panel acts as a light diffuser. To this end, said panel is printed, sand-radiated, etched, coated, engraved or stuck at least on one side or has a malstructure inside the panel, wherein the sandwich-like panel element (**100**) additionally comprises solar cell elements (**108**).

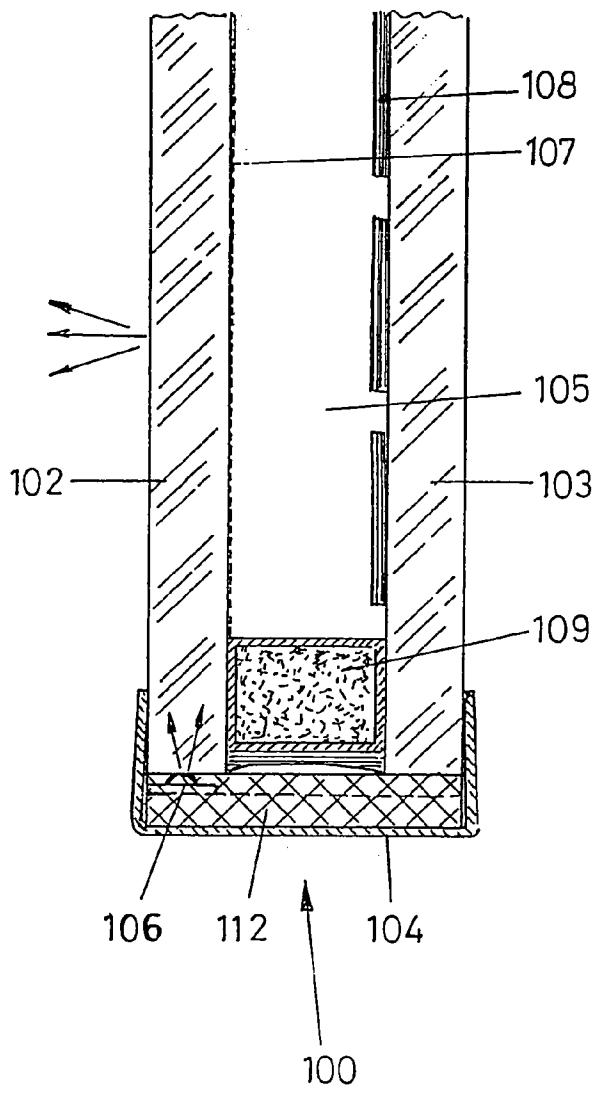

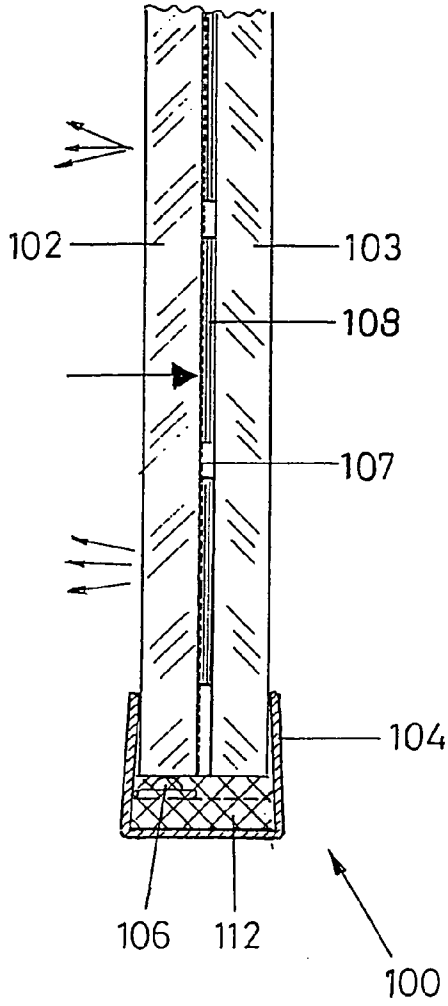

Fig. 1

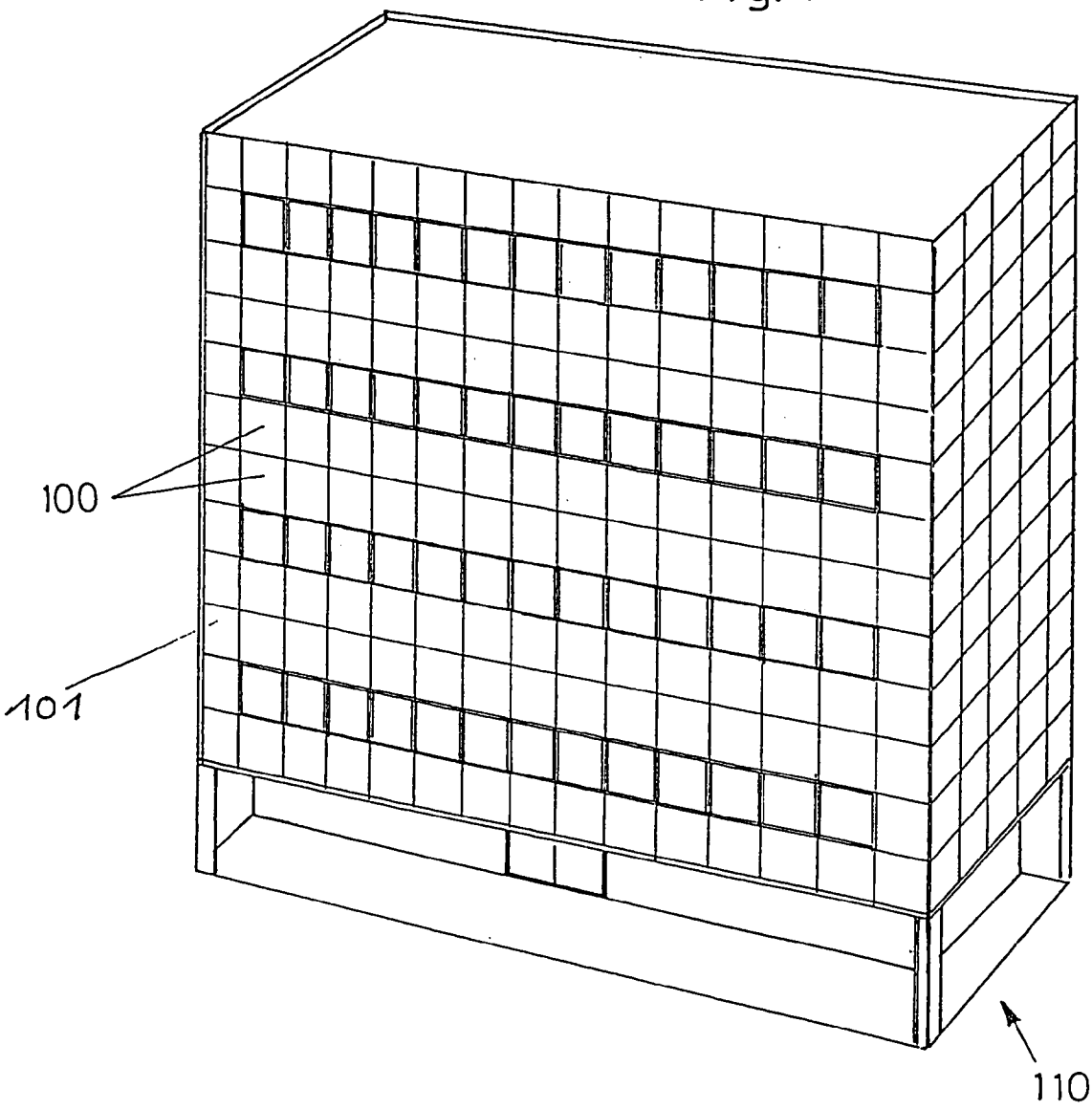

Fig. 2

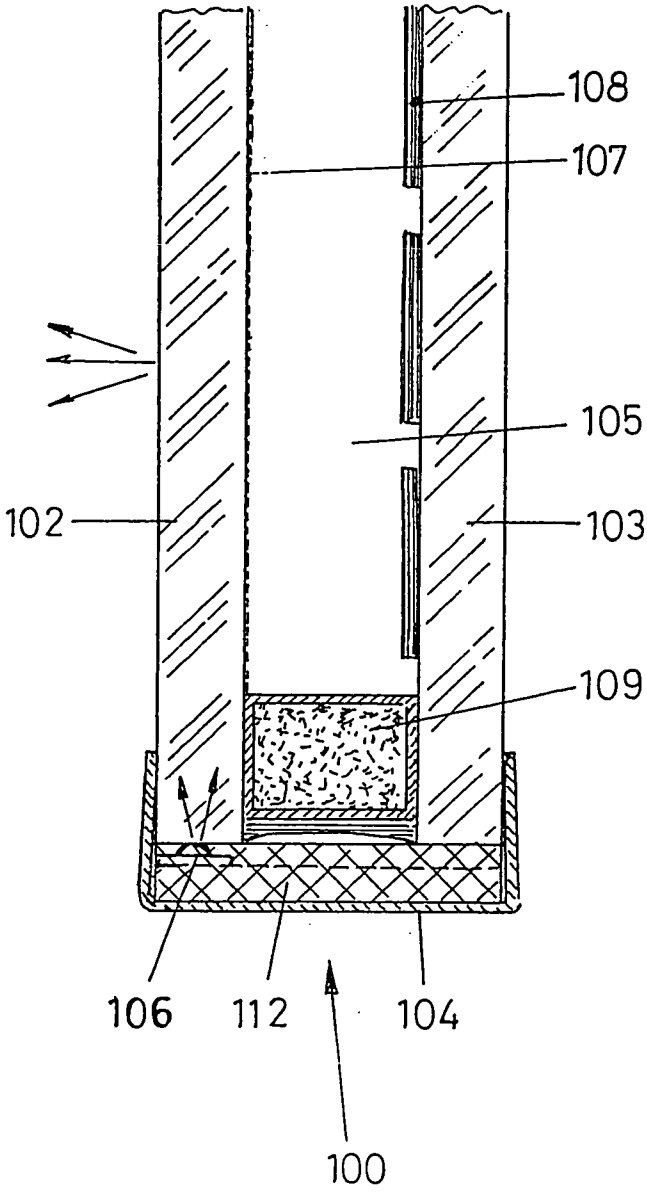
108
107
105
102
103
109
106
112
104
100

Fig. 3

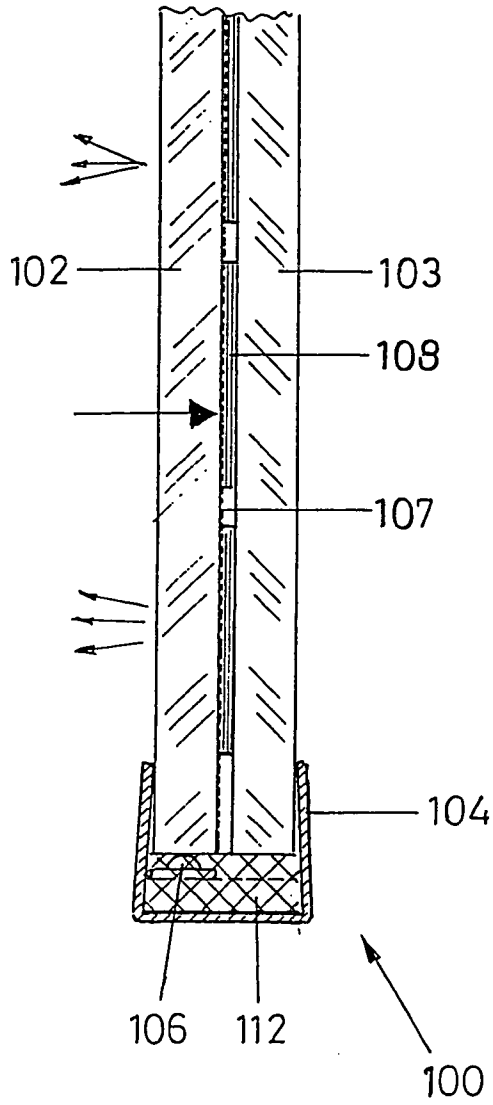
102
103
108
107
104
106
112
100

SANDWICH-LIKE PANEL ELEMENT

[0001] The present invention relates to a sandwich-like panel element comprising at least one panel as well as a lighting device with at least one lighting means which radiates light in the front part into at least one of the panels, whereby this light is deflected at least partially approximately vertically to this direction of irradiation and is projected over the surface at least one of the panels which has a transparent configuration.

[0002] In the area of luminous advertising illuminatable panel elements are known from the prior art for example, in which the light in the front part is radiated into an acrylic panel and then the panel, which is printed on a surface e.g. in a dot matrix, has a light-diffusing effect, so that the light is deflected perpendicularly to the direction of irradiation and is irradiated over the surface of the panel. With these panel elements the light radiated in the front part enters over the edge into the panel itself and is deflected in the panel and then leaves the panel via the surface. The drawback to such panels, which consist of acrylic or comparable synthetic material, is that they are relatively expensive on account of the material price. This leads to considerable restrictions with respect to the use of such panels. As a rule these known panels are thus used for advertising displays and the like, which have overall relatively small surfaces, so that the material price of the acrylic panel is reduced. On account of their high material price these light-diffusing acrylic panels are on the other hand not considered for large-surface applications, fluorescent tubes are generally used as lighting means in these acrylic panels, which irradiate the light in the front part in the panel.

[0003] In the building sector large-surface linings are nor known for facades.

[0004] When it is preferred to configure such a building facade illuminatable, then this is quite costly using conventional means. Since the abovementioned acrylic panels are too cost-intensive, they are not considered e.g. for a large-surface lining of a building facade. Besides, it is disadvantageous that conventionally employed lighting means in this area of application are mostly fluorescent tubes, which have a limited shelf life. For this reason individual fluorescent tubes have to be exchanged again and again, contributing to substantial cost in a large-surface building facade e.g. of a high-rise. A further disadvantageous aspect to conventional means for creating illuminated building facades is the relatively high energy consumption of the many required lighting means, such as e.g. fluorescent tubes.

[0005] The object of the present invention is to provide a sandwich-like panel element, which can be illuminated, projects light over the surface, is relatively cost-effective to manufacture and has minimal energy consumption.

[0006] The solution to this task is supplied by a sandwich-like panel element according to the present invention of the type mentioned at the outset having the characteristics of the main claim. The sandwich-like panel element according to the present invention is distinguished particularly well for the manufacture of large-surface illuminatable building facades, since it consumes very little or no energy.

[0007] The required lighting means can be supplied via solar cell elements, which form part of the sandwich-like panel element. Through the sandwich-like panel elements light can be emitted over the surface, without the lighting means blinding the onlooker, whereby the observer is generally totally unaware of the lighting means.

[0008] According to a possible alternative variant of the invention light is irradiated into at least one panel in the front part and this light is projected over the surface of the panel as diffused light. At the same time the panel can for example be part of a compound panel similar to a compound glass. Alternatively, two or more panels can also be used, which are partially spaced apart from one another and arranged in the cavity between two of these panels solar cell elements. At least one of the panels used in each case comprises a transparent material and attached to this panel, preferably bonded with this panel, are solar cell elements, or the solar cell elements are located in a pane-shaped panel bonded with one or more other panels. The solar cell elements attached to a panel or arranged in a panel satisfy the additional task of generating the current required for running the lighting means for illuminating the transparent panel element, into which the light is irradiated in the front part.

[0009] The first transparent panel can for example comprise glass or optionally also artificial glass and is prepared such that it has a light-diffusing effect. Glass is suggested for this purpose for applications in the facade area, where large surface areas are to be lined, because it is a relatively cost-effective basic material. The light-diffusing effect can be created by the transparent panel being printed at least on one side, sand-blasted, etched, coated, engraved or stuck and then preferably in a corresponding screen, for example in a dot matrix or band pattern to achieve the desired light-diffusing effect. The abovementioned screen, in particular dot matrix or band pattern, can comprise very small dots or dashes, of which the observer is virtually unaware and which barely prevent light from penetrating through the transparent panel.

[0010] The light falling through the transparent panel can irradiate onto the second panel containing the solar cell elements practically unhindered. The screen produced by printing or by one of the other abovementioned methods can be a screen pattern changing over the surface of the panel, which increases for example in density or size of dots or bars from the edge of the panel to the middle of the panel over the surface. This results in an improved light-diffusing effect in the desired direction.

[0011] Another consideration within the scope of the present invention is to achieve lower energy consumption than when using conventional lighting means such as fluorescent tubes or the like. Within the scope of the present invention accordingly, preferably relatively small economising lighting means with comparatively high light output are used, such as e.g. a number of LED's, SMD's, other light-emitting diodes or the like. For example a number of such LED's can be used, which are applied to a striated arrangement, situated in the front part on a panel, so that the light is irradiated into this panel. Such a striated arrangement can be attached to the frame construction, for example in a groove or the like, so that the lighting means are not visible to the observer during normal observation, that is, when he is looking in front of the panel. This creates a particularly pleasant lighting effect, since the observer is not only not blinded, but is also virtually unaware of the lighting means.

[0012] The lighting means can also be attached to a plate or the like, attached in the front part before one of the panels,

so that the light radiates into this panel. Such a plate can be used to attach a number of relatively small-sized light-emitting diodes. Such lighting means can also be cast in a type of transparent or substantially transparent synthetic block or in a square synthetic strip. One advantage of this is that the lighting means are then housed there protected from moisture.

[0013] Furthermore, any optionally required exchange of defective lighting means is much easier to handle, because the synthetic strip can then be exchanged in one piece with the embedded lighting means or the plate. In such a synthetic strip or on such a plate the required supply lines for running and optionally controlling the lighting means are generally also present, whereby strip conductors can lead to the individual lighting means. These lighting means, preferably light-emitting diodes, can be arranged in rows and optionally in individual groups.

[0014] The abovementioned lighting means such as in particular LED's and SMD's have the added advantage of being controlled using comparatively little effort that they adapt e.g. in brightness to the brightness of the surroundings. In addition, these lighting means permit many other control options.

[0015] Preferably, within the scope of the present invention control devices are provided which enable such control of the lighting means that either white or any coloured light is projected, depending on demand. Also, control devices and sensors are preferably provided, the purpose of which is to control the lighting means depending on the incident daylight. Moreover, a control can be provided depending on a person being present in the vicinity, for which a motion sensor for example is used. For control depending on incident daylight photocells or the like can be employed. And as an alternative to this or at the same time a control according to any preset program can be effected.

[0016] The sandwich-like panel element according to the present invention preferably also provide devices for fastening the panel element to a wall, to a ceiling or to a floor. One of the preferred variants offers the option of attaching such a sandwich-like panel element by adhesion, screwing or otherwise to a wall or facade of a building, so as to illuminate the wall/facade. The prime advantage of the sandwich-like panel elements is that the observer is practically unaware of the concrete light or the lighting means. Rather, there is the impression that the facade is clad by quasi self-illuminating panels. Because these lighting means such as LED's, SMD's etc. can be controlled in the so-called RGB mode (red, green and blue lighting means), the sandwich-like panel elements can be put up in any colours and thus apart from the actual lighting function can produce a lighting effect, e.g. with coloured panel patterns also.

[0017] Changing the projected light colour advantageously requires no exchange of the lighting means, rather it is only the control which is effected, where said control is actuated by the user as required, or a preset program control is stored for this purpose.

[0018] With a control dependent on daylight, for instance, the lighting means can be switched on with gradually increasing light strength, so that the observer is then barely aware of the transition from daylight to artificial light.

[0019] The sandwich-like panel elements according to the present invention can be part of a facade or a wall of a building, that is, they themselves either form part of the building wall or are placed as a facade component cladding a building wall quasi in front of the building wall and attached thereto.

[0020] The object pf the present invention is also a building facade or building wall, which comprises at least one sandwich-like panel element of the type according to the present invention having the abovementioned characteristics.

[0021] The sandwich-like panel elements according to the present invention can also be configured such that not only is at least one of the panels configured transparent, but also at least one other panel, at least partially comprising solar cell elements, is likewise configured at least partially transparent. Today solar panels are known in which the solar cell elements absorbing the light are not black, but opaque or brightly coloured, such that the solar cell elements at least partially absorb irradiated light, but the light also partially penetrates the solar panel comprising solar cell elements essentially without a change of direction. Such partially transparent panels with solar cell elements can be employed as second panel for a sandwich-like panel element according to the present invention. Such usage is particularly meaningful for lit ceilings in building or building walls as well, in which natural daylight is encouraged to penetrate throughout the day. In this case, by using sandwich-like panel elements for e.g. a lit ceiling three functions can be fulfilled.

[0022] Throughout the day these are at least partially permeable to daylight, as at least one of the panels of the sandwich-like panel element is light-permeable and the panel exhibiting the solar cell elements is likewise at least partially light-permeable. Thus daylight can be utilised for brightening the building. At the same time throughout the day as a result of solar radiation solar energy is at least partially absorbed, converted into solar power and stored. The energy generated by the solar cell elements can be supplied to the mains directly as current. In the evening, in the interests of achieving a smooth transition from daylight to artificial light, the lighting means of the sandwich-like panel element can be switched on gradually, whereby the solar current stored throughout the day can be used to run lighting means, which require little power. Lit ceilings or building walls, which have a quasi glass effect and comprise sandwich-like panel elements of the abovementioned type, are likewise an object of the present invention.

[0023] As already explained, the panel elements according to the present invention can be bonded panel elements or structured like insulating glass panes. But it is also possible to work with simple panels made of glass or artificial glass, into which the light is irradiated in the front part in the abovementioned manner, which are printed, etched etc. to generate diffused light at least on one side on the surface and to which solar cell elements are applied on one side.

[0024] The characteristics mentioned in the sub-claims relate to preferred further developments of the solution according to the present invention.

[0025] Further advantages of the invention will emerge from the following detailed description.

[0026] The present invention will now be described hereinbelow in greater detail by embodiments with reference to the attached diagrams, in which:

[0027] **FIG. 1** is a view of a facade of a building, which is clad in sandwich-like panel elements according to the present invention;

[0028] **FIG. 2** is a sectional view of an exemplary sandwich-like panel element according to a first variant of the invention;

[0029] **FIG. 3** is a sectional view of an exemplary sandwich-like panel element according to another alternative variant of the invention.

[0030] Reference is first made to **FIG. 1**. The illustration shows the facade **101** of a high-rise building **110**, which is clad on its large surfaces in sandwich-like panel elements **100** at least in part areas. These sandwich-like panel elements **100** according to the present invention comprise solar cell elements and are therefore in a position throughout the day to convert incident light into current, whereby the lighting means are supplied overnight by this generated current, via which the sandwich-like panel elements are illuminated. This brings about the possibility of a facade illuminated fully or in part, created by very little external power or completely without such. The light is fed via suitable lighting means in the front part into one of the panels of the sandwich-like panel element **100** and is deflected e.g. by screen printing of the surface of the panel element on at least one side and is then projected over the surface of the panel element substantially at a right angle in the direction of irradiation as diffused light.

[0031] A blinding effect is avoided by the lighting means generally not being directly visible to the observer. If the lighting is switched off, it can be possible to see through the sandwich-like panel element, if suitable transparent solar cell elements have been selected. In this case, the sandwich-like panel elements can be used not only as cladding elements for the facade, but also as window elements, through which light enters the building throughout the day. In this variant the invention consequently enables three functions, namely first the passage of natural light through the sandwich-like panel elements (window function), secondly the option of creating surface-lit panel elements, which are lit optionally in colour, and thirdly the surface of the building covered by the sandwich-like panel elements is used to capture sunlight and to generate current over the solar cell elements.

[0032] The more precise structure and method of operation of an exemplary sandwich-like panel element **100** according to the present invention is based on the depiction according to **FIG. 2**. In this case the sandwich-like panel element is structured like an insulating glass window with an approximately U-shaped frame construction **104**, which includes two glass panels **102**, **103** at the edge. Both glass panels **102**, **103** are spaced apart from one another as in the case of an insulating glass window, creating a cavity **105** between both glass panels **102**,**103**. The distance between both glass panels **102**, **103** is defined by a spacer **109**.

[0033] As is further inferred from the diagram, light-emitting diodes **106**, which can be cast in a type of plate **112** from a transparent material, are arranged in the front part in the region of the frame construction. The light-emitting diodes (LED's) **106** in the embodiment are in the front part in front of the transparent panel **102** and are arranged in a row (in the direction of the depth of the plane of projection). A relatively high number of such light-emitting diodes can be used, depending on the illumination requirements, for example up to several hundred lighting means **106** per running metre of transparent panel **102**. The transparent panel **102** is printed in a dot matrix **107** on one side such that the light, supplied in the front part via the LED's **106** into the glass panel **102**, is deflected and is projected as diffused light outwards over the surface of the glass panel **102**.

[0034] Applied to the inside of the glass panel **103** moreover are solar cell elements **108**, so that throughout the day natural light falling in through the glass panel **102** lands on the solar cell elements **108** where it is converted into electric energy, by means of which the lighting means **106** can be supplied with energy.

[0035] **FIG. 3** shows another alternative variant embodiment of an exemplary sandwich-like panel element **100** according to the present invention in a longitudinal section. In this variant embodiment the sandwich-like panel element **100** is a bonded element essentially comprising two glass panels **102**,**103** or artificial glass panels, which are extensively transparent.

[0036] One of the panels of the bonded element may comprise white glass and one may comprise float glass. Embedded between both these panels **102**,**103** are solar cell elements **108**. The whole bonded element is set in the front part by a frame construction **104** with an approximately U-shaped frame profile. Located in front of the front side of both glass panels **102**, **103** is a type of plate made of transparent material, in which LED's **106** are cast, which irradiate their light into the front side of the glass panel **102**. One of the surfaces, for example the inner surface of the glass panel **102**, is again printed with a dot matrix **107** or the like or etched or coated in a corresponding screen, or in its interior has a fault structure, by which the light irradiating in the front part into the glass panel, is substantially deflected at a right angle, so that it is projected over the entire surface of the glass panel **102** as diffused light.

[0037] It is also possible to also irradiate light into the front side of the second glass panel **103** via other light-emitting diodes. As in the previously described variant embodiment natural light falls throughout the day through the essentially transparent glass panel **102** onto the solar cell elements **108**, where current is generated by means of which the lighting means **106** can be fed when in the illuminated state. Since LED's or the lime are used as lighting means, they have a much lower energy consumption, and at the same time a longer shelf life. By an essentially transparent material being used to cast the plate **112** the lighting means **106** are protected against the influence of weather and mechanical influences. Such a sandwich-like bonded panel element **100** according to the variant embodiment in **FIG. 3** can also comprise more than two glass panels, which can be arranged in the bond.

1. A sandwich-like panel element (**100**) comprising at least one panel (**102**,**103**), as well as a lighting device with at least one lighting means (**106**), which irradiates light in the front part into at least one of the panels (**102**,**103**), whereby this light is deflected at least partially approximately perpendicular to this direction of radiation and is projected over the surface at least of one of the panels, which has a transparent configuration, whereby this panel has a light-diffusing effect and for this purpose at least on one side

is printed, sand-blasted, etched, coated, engraved or stuck, or inside the panel has a fault structure, characterised in that the sandwich-like panel element (**100**) also comprises solar cell elements (**108**).

2. The sandwich-like panel element as claimed in claim 1, characterised in that it comprises a second panel (**103**) at least partially comprising solar cell elements, or in that solar cell elements (**108**) are arranged on a single transparent panel (**102**) at least on one side.

3. The sandwich-like panel element as claimed in claim 1 or **2**, characterised in that the panel (**102**) configured for flat light projection and the panel (**103**) at least partially comprising solar cell elements or single solar cell elements (**108**) form a compound panel in particular similar to a compound glass.

4. The sandwich-like panel element as claimed in any one of claims 1 to 3, characterised in that solar cell elements (**108**) are attached on at least one panel of a simple glass, artificial glass or compound glass.

5. The sandwich-like panel element as claimed in any one of claims 1 to 4, characterised in that it is an insulating glass element having at least two spaced-apart panels and solar cell elements (**108**) in the cavity between both panels or arranged on at least one of both panels.

6. The sandwich-like panel element as claimed in any one of claims 1 to 5, characterised in that it is a compound glass element, whereby panels arranged bonded at least partially accommodate solar cell elements and optionally an additional panel positioned at a distance from the compound glass is provided, so that there is a cavity between the latter and the compound glass, which has an insulating effect.

7. The sandwich-like panel element as claimed in any one of claims 1 to 6, characterised in that it has a frame construction (**104**), which includes the panels (**102**, **103**) as well as optionally the solar cell elements (**108**) at least partially in the edge region.

8. The sandwich-like panel element as claimed in any one of claims 1 to 7, characterised in that a number of LED's (**106**), SMD's or other light-emitting diodes or the like is provided as lighting means arranged in the front part on the frame construction.

9. The sandwich-like panel element as claimed in any one of claims **1** or **8**, characterised in that at least one transparent panel (**102**) is printed at least one-sided in a dot matrix (**107**), band pattern or similar screen.

10. The sandwich-like panel element as claimed in any one of claims 1 to 9, characterised in that the surface of at least one transparent panel at least on one side has a dot matrix, band pattern or other screen for light diffusion created by sandblasting, etching, coating, engraving or adhesion with particles.

11. The sandwich-like panel element as claimed in any one of claims 1 to 10, characterised in that the lighting means are attached to a striated arrangement or on a plate.

12. The sandwich-like panel element as claimed in any one of claims 1 to 11, characterised in that the lighting means are cast in a transparent extensively transparent synthetic block.

13. The sandwich-like panel element as claimed in any one of claims 1 to 12, characterised in that at least one transparent panel comprises glass or artificial glass.

14. The sandwich-like panel element as claimed in any one of claims 1 to 13, characterised in that control devices are provided to control the lighting means such that they give off either white or coloured light.

15. The sandwich-like panel element as claimed in any one of claims 1 to 14, characterised in that control devices as well as sensors are provided, whose effect is to control the lighting means depending on the incident daylight, depending on an operator being in the vicinity of the sandwich-like panel element or according to any preset program.

16. The sandwich-like panel element as claimed in claim 15, characterised in that at least one photocell and/or one motion sensor is provided as sensors.

17. The sandwich-like panel element as claimed in any one of claims 1 to 16, characterised in that it is configured as a facade component and has fastening means for attaching to a building facade or building wall.

18. The sandwich-like panel element as claimed in any one of claims 1 to 17, characterised in that it has storage means such as storage batteries or the like for storing the current generated in the solar cell elements for supplying the lighting means on demand with the stored current, or in that a mains supply of the generated current is provided.

19. A building facade or building wall, characterised in that it comprises at least one sandwich-like panel element as claimed in any one of claims 1 to 18 as facade component or wall component.

20. A transparent ceiling of a building, characterised in that it comprises at least one sandwich-like panel element as claimed in any one of claims 1 to 18, whereby in this sandwich-like panel element the second panel at least partially comprising solar cell elements also has an at least partially transparent configuration.

* * * * *