US 20050246975A1

(19) United States

(12) Patent Application Publication

(10) Pub. No.: US 2005/0246975 A1

(43) Pub. Date: Nov. 10, 2005

Weisbach

(54) INTERLOCKING CONCRETE JOINT FORMS

(75) Inventor: **Eric P. Weisbach**, Louisville, KY (US)

Correspondence Address:
**Scott R. Cox**
**LYNCH, COX, GILMAN & MAHAN, P.S.C.**
**Suite 2100**
**500 W. Jefferson Street**
**Louisville, KY 40202 (US)**

(73) Assignee: **CARDINAL MANUFACTURING**, LOUISVILLE, KY

(21) Appl. No.: **11/108,188**

(22) Filed: **Apr. 18, 2005**

**Related U.S. Application Data**

(60) Provisional application No. 60/568,832, filed on May 6, 2004.

**Publication Classification**

(51) **Int. Cl.**[7] ..... **E02D 5/74**; E01C 7/00; E04B 5/00; E04B 7/00; E04B 1/00; E01C 11/04; E01C 11/02

(52) **U.S. Cl.** ..... **52/155**; 249/9; 249/3; 404/50

(57) **ABSTRACT**

An interlocking concrete joint form including a metal stake having a flattened end containing a plurality of serrations and an elongated metal form having a generally flat top portion and a pair of parallel planer side portions, wherein one of the side portions contains an inwardly facing inner portion which forms a locking pawl for interacting with the serrations of the metal stake and wherein neither side portion contains a key-joint portion.

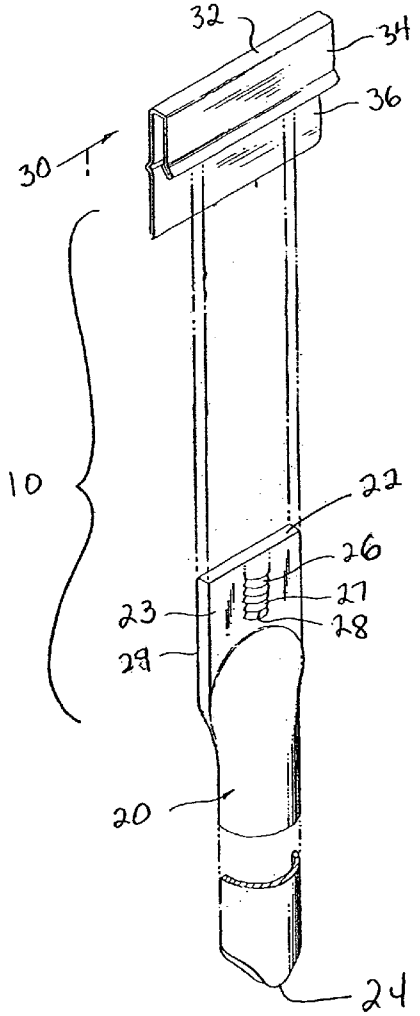

FIG. 1

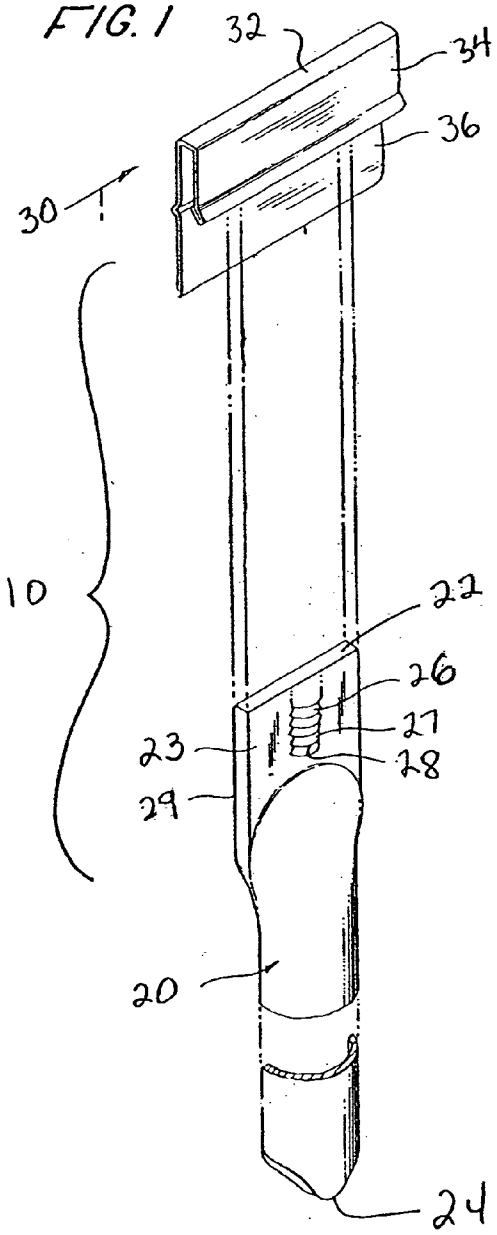


FIG. 2

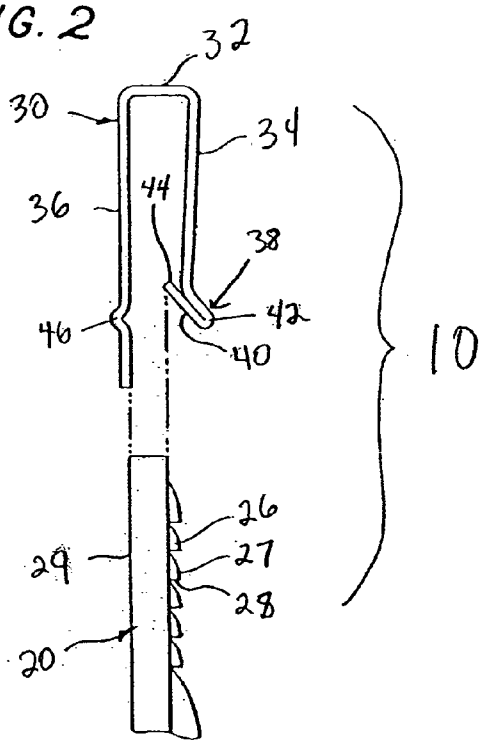


FIG. 3

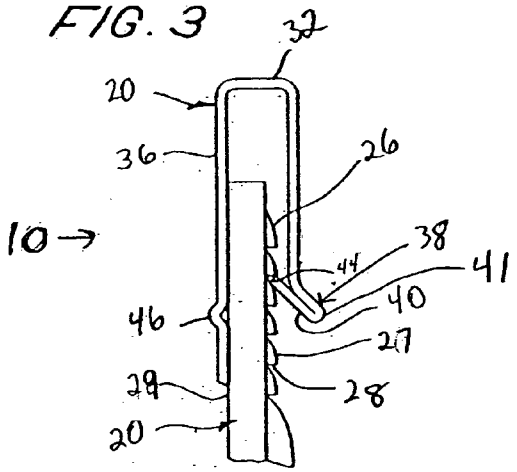

# INTERLOCKING CONCRETE JOINT FORMS

## RELATED APPLICATIONS

[0001] This application claims priority from Provisional application Ser. No. 60/568,832, filed on May 6, 2004.

## BACKGROUND OF INVENTION

[0002] This invention relates to metal concrete joint forms which utilize adjustable stakes. In particular, it relates to an interlocking concrete joint form containing a metal stake having a plurality of serrations which interact with a locking pawl contained in a lower edge of one side of an elongated metal form, wherein the metal form does not include a key-joint portion.

[0003] Concrete is used for flooring in most major buildings and in other commercial utilizations both inside and out of doors because of its strength, durability and reliability. However, because concrete tends to expand and contract depending on the temperature, concrete slabs frequently crack once they have dried. Concrete also tends to buckle and rise at the point of any fractures caused by the cracking of the concrete slabs.

[0004] To allow for expansion and contraction while at the same time preventing the vertically displacement of the concrete, metal divider strips adapted to form a key-joint between two adjacent concrete slabs have been developed such as those shown for example, in U.S. Pat. No. 4,455,104. These key-joints are used in concrete slabs on a premade surface or on the ground. To set up these key-joint forms before pouring the concrete, vertical stakes are driven into the ground or subground and arranged with their upper ends near the proposed height of the concrete slab. These stakes contain a means for attachment to the key-joint forms to hold those forms at a preset height. One means of attachment of the stake to the key-joint forms is shown in U.S. Pat. No. 4,455,104.

[0005] Conventional key-joint forms extend a significant distance into the concrete and include key joints which frequently prevent the placement of wires, conduits and wire mesh under the key-joint forms prior to or during the pouring of the concrete. In addition, conventional key-joint metal concrete joint forms are expensive to produce.

[0006] In some situations when the area to be covered by concrete is relatively small, instead of using key-joint forms in the concrete, a slab of concrete is poured. The concrete slab is then cut with a concrete saw. The concrete saw forms expansion joints in the concrete. However, the preparation of these joints in concrete slabs can be difficult because of the need for the use of expensive concrete saw cutting equipment.

[0007] As an alternate process a metal or plastic strip can be installed into the concrete after it has been poured, but before it sets, to form a joint. This system also has disadvantages based on the nature of the joint strips.

[0008] Because of the cost of conventional metal concrete key-joint forms and because of the difficulties associated with the use of concrete saws and metal or plastic pieces used to form joints in concrete, an improved concrete joint form for use with adjustable stakes is necessary.

[0009] Therefore, it is an object of the inventors to provide an inexpensive concrete joint form that does not include a key-joint.

[0010] The objects and features of the present invention will become apparent to those skilled in the art from a consideration of the following detailed description, drawings and claims. The description along with the accompanying drawings provides a selected example of construction of the device to illustrate the invention, but does not place any limitation on the scope of the claims of the invention.

## SUMMARY OF THE INVENTION

[0011] In accordance with the present invention there is provided an interlocking concrete joint form **(10)** containing a supporting metal stake **(20)** having a generally flattened end **(22)** containing a plurality of serrations **(26)** formed on one side **(23)** of the flattened end **(22)**, and

[0012] an elongated metal form **(30)** having a generally flat top portion **(32)** with generally parallel planer side portions **(34, 36)**, each of which extends at angle of about 90° away from the top portion **(32)**, wherein one of the side portions **(34)** is preferably shorter than the other side portion **(36)**, wherein the horizontal edge **(38)** of the shorter side portion **(34)** furthest from the top portion **(32)** comprises a hook portion **(40)** having a downwardly turned flange **(42)** and an inwardly facing inner portion **(44)** which forms a locking pawl, wherein the longer side portion **(36)** contains an outwardly extending horizontal section **(46)** located approximately the same distance from the top portion **(32)** as the flange **(42)** of the shorter side portion **(34)**, and wherein neither side portion contains a key-joint portion.

## BRIEF DESCRIPTION OF DRAWINGS

[0013] **FIG. 1** is an exploded, perspective view of the interlocking metal concrete joint form of the invention.

[0014] **FIG. 2** is an exploded, side elevational view of the concrete joint form with the stake separated from the elongated metal form.

[0015] **FIG. 3** is a side elevational view similar to **FIG. 2** with the concrete joint form in interlocking relationship with the supporting stake.

[0016] **FIG. 4** is a perspective view showing a building site wherein interlocking concrete joint forms have been installed prior to the pouring of concrete.

## DESCRIPTION OF A PREFERRED EMBODIMENT

[0017] Although the invention is adaptable to a wide variety of uses, it is shown in the drawings for purpose of illustration as embodied in an interlocking concrete joint form **(10)** comprised of a metal stake **(20)** interconnected with an elongated metal form **(30)**, as shown in **FIGS. 1-3**.

[0018] The metal stake **(20)** of the interlocking concrete joint form **(10)** is an extended vertical stake designed for driving into the area to be covered by concrete. The metal stake locates and levels the metal form **(30)** before the concrete is poured. Preferably, the metal stake **(20)** is constructed of heavy steel. It contains a flattened, top end **(22)** with a generally pointed bottom end **(24)**. Preferably, the flattened, top end **(22)** includes a generally flat side

portion (**23**) on one side of the stake (**20**) for engagement with the elongated metal form (**30**).

[**0019**] On the generally flat side portion (**23**) of the stake (**20**) is formed a plurality of closely spaced, vertical serrations (**26**), as shown in **FIGS. 1-3**. In a preferred embodiment each serration (**26**) is in the shape of an upwardly tapered, semi-conical tooth (**27**) having a lower, generally horizontal undercut (**28**) separating it from the next lower serration. It will be understood by those skilled in the art that other shapes for the serrations (**26**) can be utilized without departing from the present invention. These serrations (**26**) are preferably formed as embossments by striking the flattened end (**22**) of the stake (**20**) from the backside (**29**) at the same time that the flattened end (**22**) is flattened.

[**0020**] The elongated metal form (**30**) is comprised of a generally flat top portion (**32**), a generally planar, shorter side portion (**34**) and a generally planar longer side portion (**36**) as shown in **FIGS. 1-3**. The generally planar longer side portion (**36**) is generally no more than about ½-2 inches longer than the generally planar, shorter side portion (**34**). Each side portion (**34, 36**) is preferably no more than about 1-3 inches in height from the top portion (**32**) to the respective horizontal edges of the side portions (**34, 36**). By keeping these sides portions (**34, 36**) relatively short, there is significant room below them in the concrete to place wires, cables and mesh. Each of the planar side portions (**34, 36**) extends at approximately a 90 degree angle from the generally flat top portion (**32**) of the metal form (**30**) as shown in **FIGS. 2 and 3**. The generally flat top portion (**32**) can be of any width, but generally is relatively narrow, being slightly wider than the width of the flattened end (**22**) of the metal stake (**20**), as shown in **FIG. 3**. The two generally planar side portions (**34, 36**) extend in a generally parallel direction to each other downwardly from the generally flat top portion (**32**).

[**0021**] The generally planar, shorter side portion (**34**) contains a lower horizontal edge (**38**) with a downward turned flange (**42**), a hook portion (**40**) and inwardly facing inner portion (**44**). The lower horizontal edge (**38**) of the generally planar, shorter side portion (**34**) is formed while the downwardly turned flange (**42**) is formed with a hem on the inside of the flange (**42**). Then the hemmed edge (**38**) is folded outward at an angle of about 45 degrees and then folded inwardly to form the inner portion (**44**), as shown in **FIGS. 2 and 3**. This inwardly facing inner portion (**44**) serves as the pawl for cooperation with the plurality of serrations (**26**) on the flattened end (**22**) of the metal stake (**20**), as is shown in **FIG. 3**. Sufficient space (**28**) is provided between each of serrations (**26**) on the flattened end (**22**) of the metal stake (**20**) so that the inwardly facing inner portion (**44**) fits into the space (**28**) between the serrations (**26**). The interaction between the inwardly facing inner portion (**44**) of the generally planar shorter side portion (**34**) and the plurality of serrations (**26**) of the metal stake (**20**) permit the metal stake (**20**) to slide into the space between the shorter (**34**) and longer (**36**) planar side portions, snapping into place to form a strong, adjustable locking action between the metal stake (**20**) and the elongated metal form (**30**). The vertically arranged serrations (**26**) are considered a ratchet and the inwardly facing inner portion (**44**) is considered a locking pawl that is stressed in compression in the event a lifting force is applied to the joint form (**10**), tending to lift the elongated metal form (**30**) from the stake (**20**). While it is relatively easy to insert the flattened end (**22**) of the metal stake (**20**) into the space between the generally planar shorter (**34**) and longer (**36**) side portions, these portions (**34, 36**) cannot be inadvertently disengaged from the metal form (**30**). If it is necessary to remove the metal form (**30**) from the metal stake (**20**), a screwdriver or other tool should be inserted from the under side up into the space between the planar shorter side portion (**34**) and the planar longer side portion (**36**) to spread the downward turned flange (**42**) outwardly and disengage the inwardly facing inner portion (**44**) from the plurality of serrations (**26**) of the metal stake (**20**).

[**0022**] The generally planar, longer side portion (**36**) is roughly parallel to the generally planar shorter side portion (**34**), as shown in **FIGS. 2 and 3**. The longer side portion (**36**) extends downward in a generally straight plane except for an outwardly extending, horizontal section (**46**) which runs the length of the generally planar, longer side portion (**36**). This outwardly extending, horizontal section (**46**) is located approximately opposite the downwardly turned flange (**44**) of the generally planar, shorter side portion (**34**).

[**0023**] In contrast to conventional metal key-joint forms, such as is disclosed in U.S. Pat. No. 4,454,104, the longer planar side portion (**36**) extends only a short distance beyond the outwardly extending horizontal section (**46**) as, shown in **FIGS. 2 and 3**, preferably about 0.5 to about 2 inches beyond. No key-joint, as designated by element **18** in U.S. Pat. No. 4,454,104, is included as part of this generally planar, longer side portion (**36**). Without this component more space is provided below the elongated metal form (**30**) in the concrete for placement of wires, conduits and wire mesh. Such unimpeded space is not present with a conventional key-joint, as provided by conventional concrete key-joint forms of the prior art. In addition, by eliminating the key-joint and any further extension of the generally planar, longer side portion (**36**), the interlocking concrete joint form (**10**) of the invention is particularly useful for smaller jobs, where fewer joints are necessary.

[**0024**] Use of the joint form (**10**) of the invention also eliminates the need for use of a concrete saw to cut joints into already formed concrete slabs. Further, the use of the concrete joint form (**10**) of the invention without a key-joint eliminates the need for using metal or plastic pieces placed in the concrete after the concrete has been poured to form a joint.

[**0025**] Further, by use of a combination of the elongated metal form (**30**) with a generally planar, longer side portion, (**36**) which does not contain a key-joint, with the metal stake (**20**), a simplified joint form (**10**) is provided for the consumer to produce joints in concrete at a specific depth while still permitting the placement of all components, such as wires, conduits and wire mesh, beneath the joint form (**10**) within the concrete.

[**0026**] In operation, a mechanism is introduced to permit placement of metal stakes (**20**) at the site where a concrete slab is to be poured. For example, stretch lines (**50**) can be erected across the area where the concrete is to be poured, as shown in **FIG. 4**. The metal stakes (**20**) are then driven into the ground a sufficient distance until the top of the flattened end (**22**) is near the desired height for the concrete determined by the stretch lines. Sufficient metal stakes (**20**) are driven to support the full length of the elongated metal

forms **(30)** that are necessary to form the cracks in the particular concrete slab. The appropriate elongated metal forms **(30)** are cut to the appropriate length and are then driven onto the flattened end **(22)** of the metal stakes **(20)** until the elongated metal form **(30)** is in the proper level position. Because of the easy placement of the inwardly facing inner portions **(44)** of the elongated metal form between the plurality of serrations **(26)** of the metal stake **(20)**, it is not necessary to use significant force to drive the elongated metal form **(30)** onto the metal stake **(20)**. Once sufficient elongated metal forms **(30)** are in place on the metal stakes **(20)**, the concrete can be poured and the concrete slab prepared.

[**0027**] Modifications of this invention can be made by those skilled in the art. Therefore, it is understood that this invention is not limited to the particular embodiment disclosed in the specification but is intended to cover all modifications which are within the scope of the invention.

**1**. An interlocking concrete joint form comprising

a metal stake having a generally flattened end, wherein the flattened end contains a plurality of serrations formed on one side of the flattened end, and

an elongated metal form capable of interlocking with the metal stake, wherein the elongated metal form comprises a generally flat, top portion and generally parallel, planer side portions, each extending at a angle of about 90° in the same direction away from the top portion, wherein one of the side portions is shorter than the other side portion, wherein the bottom edge of the shorter side portion furthest away from the top portion comprises a hook portion having a downwardly turned flange and an inwardly facing inner portion which forms a locking pawl, wherein the second longer side portion containing an outwardly extending horizontal section, located approximately the same distance from the flat top portion as the hook portion of the first side portion and wherein neither side portion contains a key-joint portion.

**2**. An interlocking concrete joint form comprising

a metal stake having a generally flattened end, wherein the flattened end contains a plurality of serrations formed on one side of the flattened end, and

an elongated metal form capable of interlocking with the metal stake, wherein the elongated metal form comprises a generally flat, top portion and generally parallel, planer side portions, each extending at a angle of about 90° in the same direction away from the top portion, wherein one of the side portions is shorter than the other side portion, wherein the bottom edge of the shorter side portion furthest away from the top portion comprises a hook portion having a downwardly turned flange and an inwardly facing inner portion which forms a locking pawl, wherein the second longer side portion containing an outwardly extending horizontal section, located approximately the same distance from the flat top portion as the hook portion of the first side portion and wherein neither side portion contains a key-joint portion and wherein the metal stake further comprises an extended, raised portion, raised from the plurality of serration, wherein the raised portion prevents the shorter side portion from extending further down the metal stake.

**3**. An interlocking concrete joint form comprising

a metal stake having a generally flattened end, wherein the flattened end contains a plurality of serrations formed on one side of the flattened end, and

an elongated metal form capable of interlocking with the metal stake, wherein the elongated metal form comprises a generally flat, top portion and generally parallel, planer side portions, each extending at a angle of about 90° in the same direction away from the top portion, wherein one of the side portions is shorter than the other side portion, wherein the bottom edge of the shorter side portion furthest away from the top portion comprises a hook portion having a downwardly turned flange and an inwardly facing inner portion which forms a locking pawl, wherein the second longer side portion containing an outwardly extending horizontal section, located approximately the same distance from the flat top portion as the hook portion of the first side portion and wherein neither side portion contains a key-joint portion and wherein each of the serration are formed in the shape of an upwardly tapered tooth having a lower, generally horizontal undercut separating it from the next lower serration.

**4**. The interlocking concrete joint form of claim 1, wherein the space between the serrations of the metal stake is approximately equal to the thickness of the locking pawl of the first side portion of the elongated metal form.

**5**. The interlocking concrete joint form of claim 1, wherein the height of the shorter side portion and the longer side portion is from about 1 to about 3 inches.

**6**. The interlocking concrete joint form of claim 1, wherein the difference in height between the shorter side portion and the longer side portion is from about ½ inch to about 2 inches.

**7**. The interlocking concrete joint form of claim 2, wherein the space between the serrations of the metal stake is approximately equal to the thickness of the locking pawl of the first side portion of the elongated metal form.

**8**. The interlocking concrete joint form of claim 3, wherein the space between the serrations of the metal stake is approximately equal to the thickness of the locking pawl of the first side portion of the elongated metal form.

**9**. The interlocking concrete joint form of claim 2, wherein the height of the shorter side portion and the longer side portion is from about 1 to about 3 inches.

**10**. The interlocking concrete joint form of claim 3, wherein the height of the shorter side portion and the longer side portion is from about 1 to about 3 inches.

**11**. The interlocking concrete joint form of claim 2, wherein the difference in height between the shorter side portion and the longer side portion is from about ½ inch to about 2 inches.

**12**. The interlocking concrete joint form of claim 3, wherein the difference in height between the shorter side portion and the longer side portion is from about ½ inch to about 2 inches.

* * * * *