March 27, 1945. W. F. ROSS 2,372,605

METHOD AND APPARATUS FOR MAKING SOLID OBJECTS FROM METAL POWDER

Filed Nov. 4, 1941 5 Sheets-Sheet 1

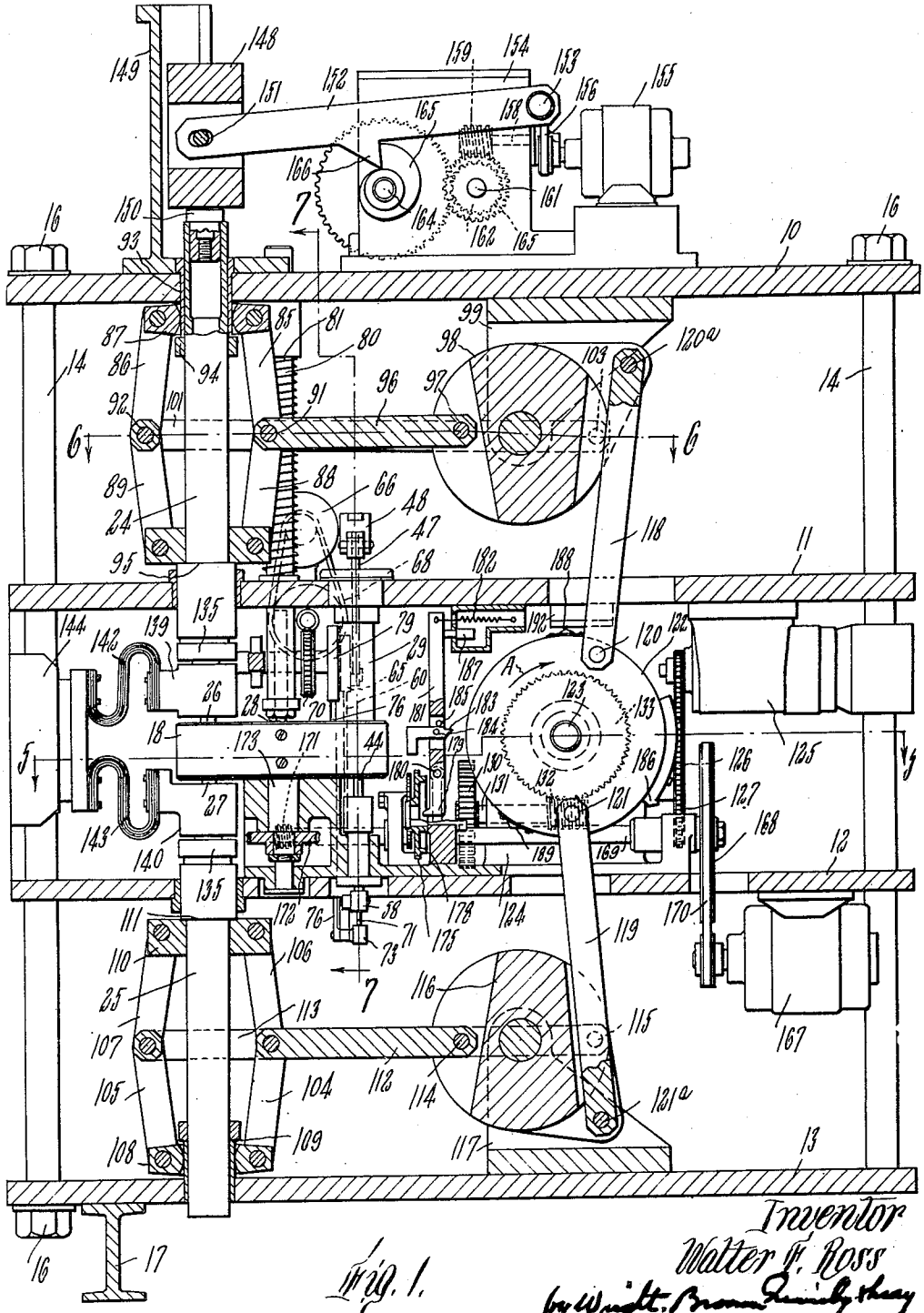

Fig. 1.

Inventor
Walter F. Ross
by Wright, Brown, Quinby & Shay
Attys.

March 27, 1945. W. F. ROSS 2,372,605

METHOD AND APPARATUS FOR MAKING SOLID OBJECTS FROM METAL POWDER

Filed Nov. 4, 1941 5 Sheets-Sheet 2

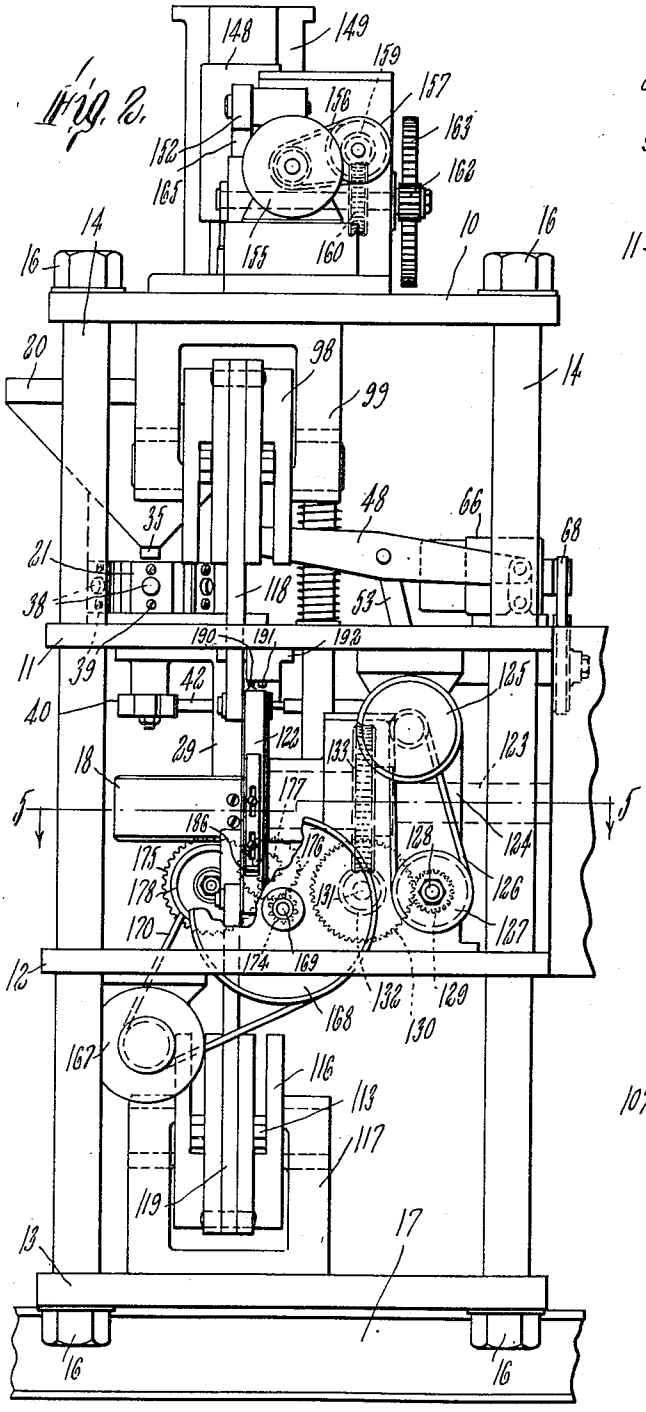

Fig. 2.

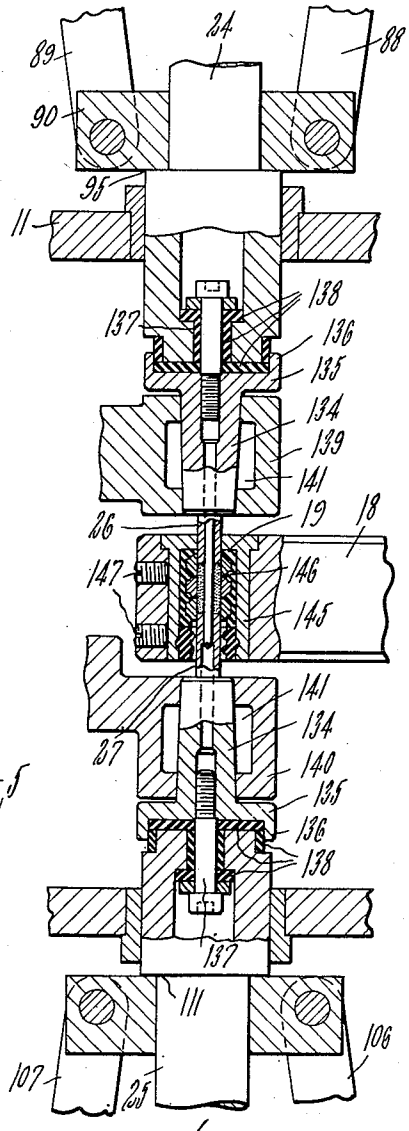

Fig. 3.

Inventor
Walter F. Ross
by Wright, Brown, Quinby & Macy
Attys.

March 27, 1945. W. F. ROSS 2,372,605

METHOD AND APPARATUS FOR MAKING SOLID OBJECTS FROM METAL POWDER

Filed Nov. 4, 1941 5 Sheets-Sheet 3

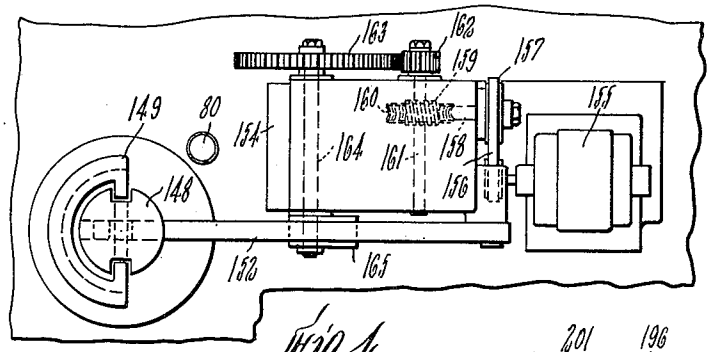

Fig. 4.

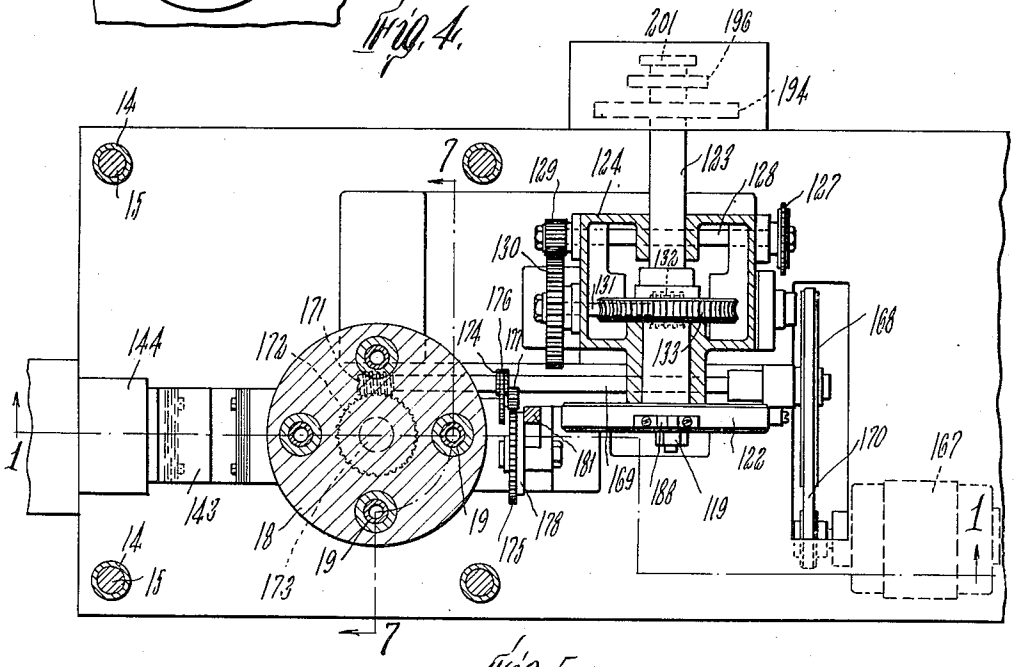

Fig. 5.

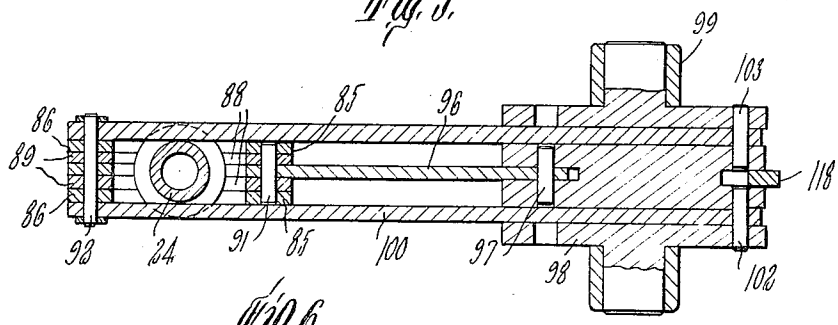

Fig. 6.

Inventor
Walter F. Ross
by Wright, Brown, Quinby & May
Attys.

March 27, 1945. W. F. ROSS 2,372,605

METHOD AND APPARATUS FOR MAKING SOLID OBJECTS FROM METAL POWDER

Filed Nov. 4, 1941 5 Sheets-Sheet 4

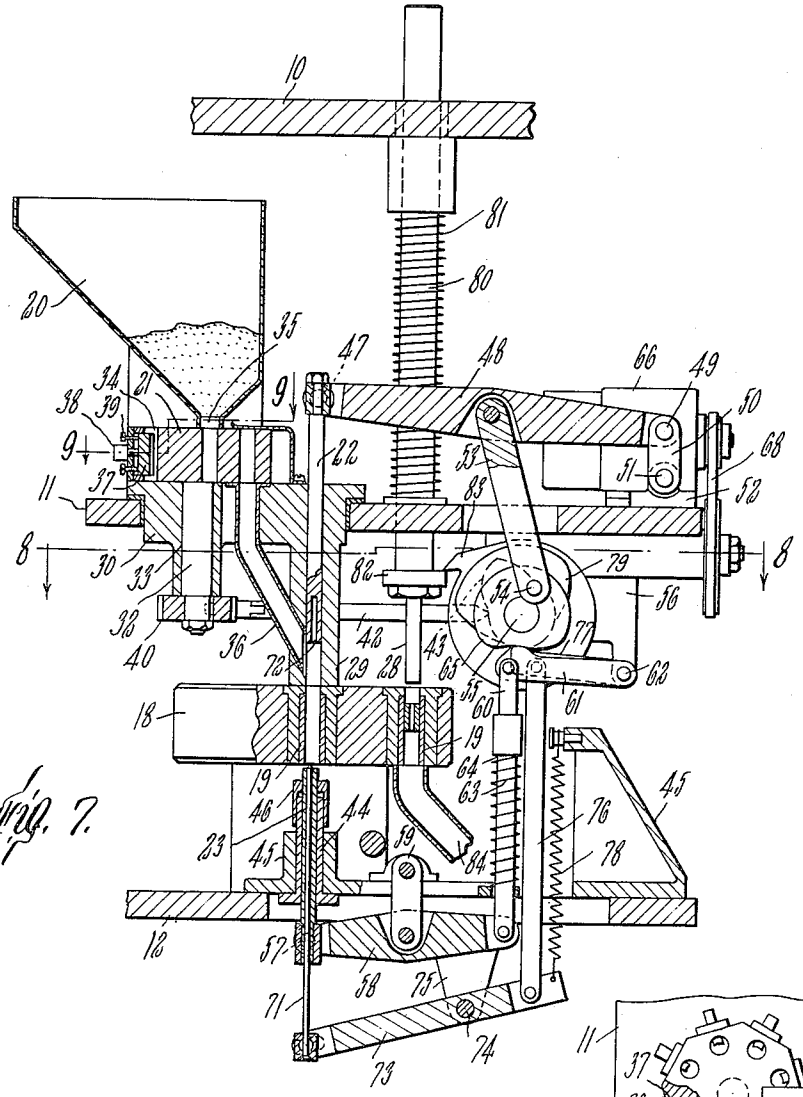

Fig. 7.

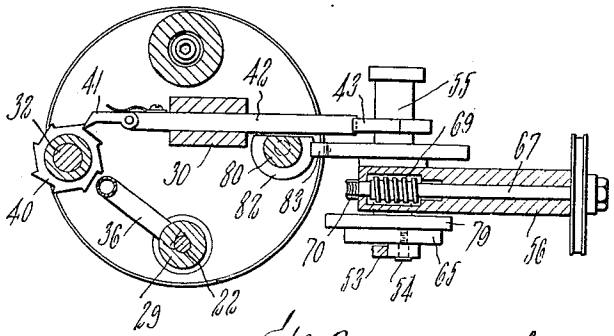

Fig. 8.

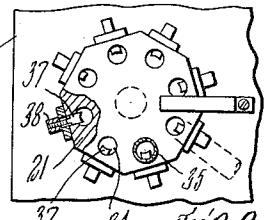

Fig. 9.

Inventor
Walter F. Ross
by Wright, Brown, Quinby & Huxley
Attys.

March 27, 1945. W. F. ROSS 2,372,605

METHOD AND APPARATUS FOR MAKING SOLID OBJECTS FROM METAL POWDER

Filed Nov. 4, 1941 5 Sheets-Sheet 5

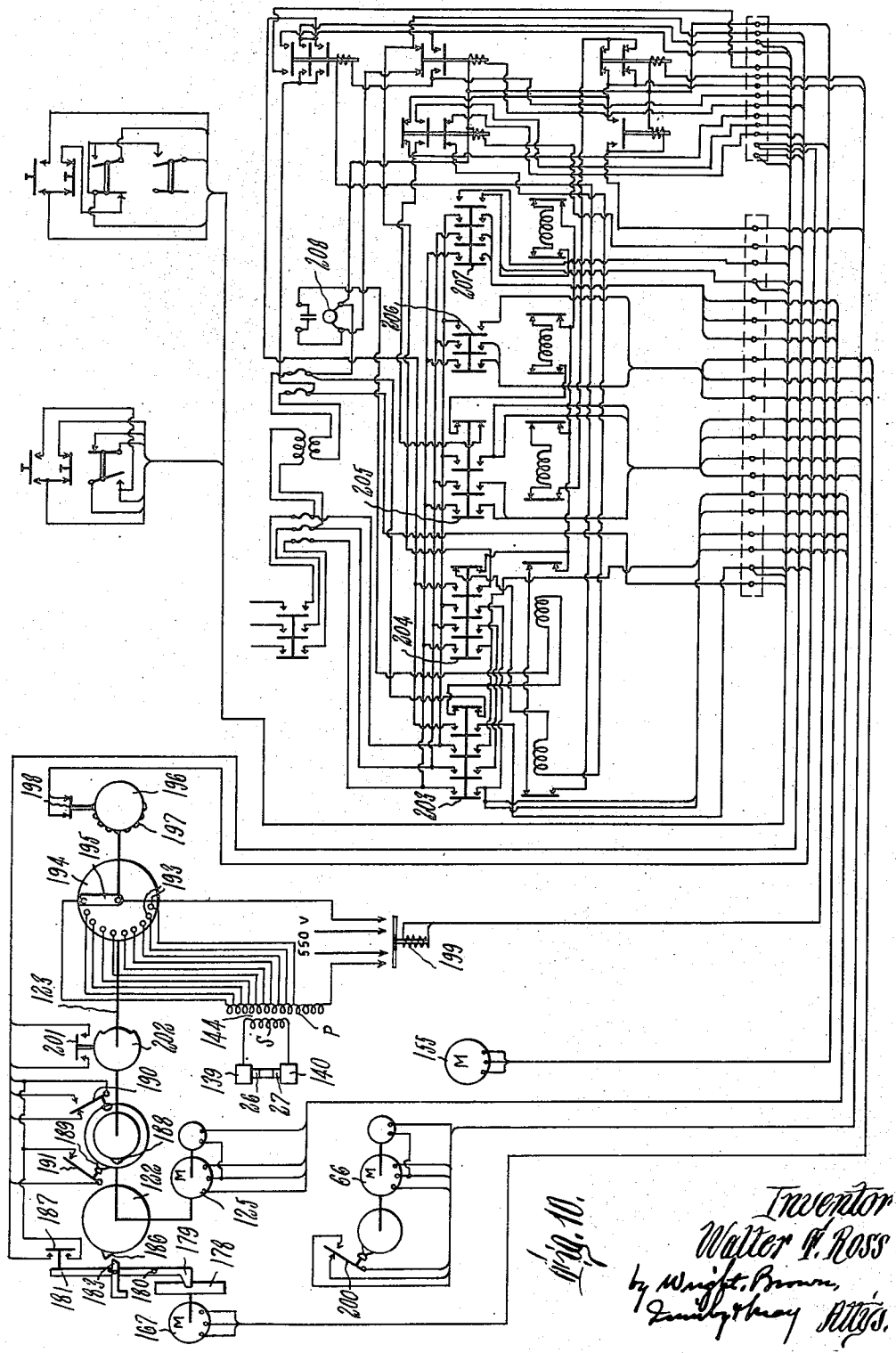

Fig. 10.

Inventor
Walter F. Ross
by Wright, Brown, Quinby & Clay
Attys.

Patented Mar. 27, 1945

2,372,605

UNITED STATES PATENT OFFICE

2,372,605

METHOD AND APPARATUS FOR MAKING SOLID OBJECTS FROM METAL POWDER

Walter F. Ross, Detroit, Mich., assignor to The Fellows Gear Shaper Company and to Jones & Lamson Machine Company, both of Springfield, Vt., and both corporations of Vermont

Application November 4, 1941, Serial No. 417,806

12 Claims. (Cl. 75—22)

The present invention relates to the subject generically known as powder metallurgy. It is more particularly concerned with that phase of the art which consists in consolidating metallic powders into coherent objects by simultaneous application of heat and pressure.

Heretofore the development of powder metallurgy in commercial practice has been mainly along the lines of the so called cold press process, according to which quantities of metal powder are pressed cold in a mold under pressure, sometimes aided by binding material, sufficient to produce a metal powder compact or briquette which can be handled, but is not strong enough for use. The briquette so made is then sintered, i. e., heated to a degree sufficient to cause permanent adhesion to one another of the particles at their points of mutual contact. In the case of some products, notably the hard cemented carbides, where a powder mixture containing different metals, one of which has a lower melting point than others, is used, the heat treatment is carried on at a temperature high enough to cause fusion and flow of the ingredient of lower melting point.

Except in the case of very soft metals which are readily deformable under pressure, cold compression does not close up the voids between the particles, wherefore pieces which are sintered without fusion are permanently porous. Such porosity, while of advantage in certain circumstances, as where absorption of oil for lubrication occurs, is an objection where maximum density, strength and wear resisting properties are desired. Thus the cold press process is not satisfactory for molding powders of iron, iron alloys, and other metals and alloys of comparable hardness because it does not produce a sufficiently close approach to the true theoretical density of the metal in the finished product. Pressures up to 200,000 pounds per square inch have been found necessary with certain ferrous powders in order to obtain products having a reasonable density. Obviously, to compress pieces of any considerable dimensions with such an intensity of pressure would require extremely large, heavy and expensive presses; in some cases far beyond the limits of practicability and, in any case, involving a great capital investment.

But if the metal could be sufficiently heated to soften the particles, simultaneously with the application of pressure, a comparable density could be obtained with pressures in the order of one tenth those required in the cold pressing method, and products of density approximating the true density of the metal could be made by application of practicable pressures.

There is a crying need at the present time for a practical means for hot pressing ferrous and other powders which are highly resistant to deformation when cold. Many articles in the technical literature point to the great advantages incident to hot pressing in comparison with cold pressing. But no practical commercial means has yet been devised, to the best of my knowledge, whereby metal powder masses may be heated and compressed to a density approximating that of the forged metal, rapidly, and at the same time molded to finshed form and dimensions.

The primary object of this invention is to provide a commercial machine adapted to supply this need. Objects contributory to the foregoing are to regulate and control the temperature, amount and timing of heat input during pressing; to regulate the intensity of pressure loading applied to the powder mass or briquette; and to apply shock or impact loading in conjunction with constant, or squeeze, loading, or independently. Further objects, which are preferred but not obligatory, are to effect a precompression, without heating, of the powder in the same die or mold in which hot compression is effected; to deliver automatically measured quantities of powder to the die or mold, and to carry out the steps of loading the mold, precompressing the powder, hot pressing the briquette, and ejecting the finished product in an automatic sequence of operations.

Illustrative means capable of accomplishing the foregoing objects are shown in the drawings and described in the following specification.

In the drawings,

Fig. 1 is a central vertical section of the machine, showing the hot pressing elements thereof in elevation;

Fig. 2 is a side view of the machine as seen from the right of Fig. 1;

Fig. 3 is a sectional view of the hot pressing equipment in a plane parallel to that of Fig. 1, and shown on a larger scale;

Fig. 4 is a partial plan view of the machine;

Fig. 5 is a horizontal section taken on line 5—5 of Figs. 1 and 2;

Fig. 6 is a detail sectional view taken on line 6—6 of Fig. 1 and shown on a larger scale;

Fig. 7 is a vertical sectional view taken approximately on line 7—7 of Figs. 1 and 5;

Fig. 8 is a horizontal section taken on line 8—8 of Fig. 7;

Fig. 9 is a partial section and partial plan view of the powder metering and feeding element of the machine taken on line 9—9 of Fig. 7;

Fig. 10 is a diagram of electrical circuits controlling the operation of the machine.

Like reference characters designate the same parts wherever they occur in all the figures.

The operative instruments of the machine are mounted and supported by a frame structure of any convenient construction, here shown as horizontal plates 10, 11, 12 and 13 spaced apart, one above another, by spacing sleeves 14 located at suitable positions, and tied together by rods 15 passing through holes in the plates and through the sleeves 14, and on the ends of which nuts 16 are threaded above the top plate 10 and beenath the bottom plate 13. This structure rests on a base, a portion of which is indicated in Figs. 1 and 2 as an I beam 17.

In the organization of the machine for automatically furnishing measured quantities of powder, precompressing the powder, uniting the powder into a solid body under pressure, and ejecting the finished product, there is provided a turret 18 containing four dies 19, which is indexed to bring each die successively into each of four different positions; a hopper 20 for containing powder; a metering head 21; precompression plungers 22 and 23; main pressing bars or rods 24 and 25 carrying plungers or rams 26 and 27, respectively; an ejector 28; mechanisms for operating these several instruments in proper sequence; and means for causing flow of electric current between the main pressure plungers through the powder in sufficient volume to heat the powder by electric resistance to welding temperature. These instrumentalities are taken up for further description in detail in the approximate order of their sequence of operations on the material, rather than in the order of their importance to the invention.

The powder hopper 20, metering head 21 and a guide 29 for the upper precompression plunger 22 are all supported on or provided in a bracket 30 supported on and in the frame plate 11. The metering head is secured to a shaft 32, rotatable in a bearing 33 in the bracket 30, and contains a number of passages 34 arranged to be placed in succession, by rotation of the head, beneath the outlet 35 of the hopper. Passages 34 extend throughout the depth of the metering head and are obstructed at their lower ends by the supporting surface of bracket 30. Adjacent to one of the stopping locations of these passages, a conduit 36 passes through the bracket 30 and into the side of the plunger guideway 29 for conducting powder to that molding die which is alined with plungers 22 and 23. Blocks 37 are adjusted by screws 38 and 39 to protrude more or less into the metering passages or cavities 34 for regulating the volume of the charges. A ratchet 40 is keyed to shaft 32 and is operated by a pawl 41, carried by a bar 42 which slides in a guideway in a portion of the bracket 30, and a cam 43, to turn the metering head intermittently, whereby the passages are brought into register with the hopper outlet and the conduit 36 successively.

A guide 44 for the lower precompression plunger 23 is mounted in a bracket 45, supported on the frame plate 12, in vertical alinement with the guide 29, beneath the turret 18 and in alinement with one of the stopping positions of the dies 19. A seal 46 is mounted on guide 44 and closely surrounds the plunger 23 to exclude metal dust from the guide.

Plunger 22 is connected by a pivot pin 47 with a lever 48 pivoted at 49 to a link 50, which in turn is pivoted at 51 to a bracket 52 on the frame plate 11. This lever is coupled by a connecting rod 53 with a crank pin 54 carried by a cam shaft 55 which rotates in a bracket 56 secured to the under side of plate 11. Plunger 23 is coupled by a pivot 57 with a lever 58, which is suspended from bracket 45 by a link 59. A rod 60 is coupled at one end to lever 58 and at its other end to a lever 61 which is pivoted at 62 to the bracket 56. A spring 63 reacts between a portion of bracket 45 and a shoulder 64 on the rod 60, holding a cam follower portion of lever 61 against a cam 65 on cam shaft 55.

The cam shaft is rotated by an electric motor 66 which drives a shaft 67 through belt transmission 68, said shaft 67 being contained in a bearing in bracket 56 and carrying a worm 69 meshing with a worm wheel 70 on the cam shaft. Cam 43, which rotates the metering head, is likewise secured to shaft 55.

The equipment here illustrated is adapted to mold pieces with central openings. A rod or core pin 71 for providing such an opening is mounted to travel endwise through the plunger 23, which has a central bore for the purpose, and to enter a recess 72 in the plunger 22. This core pin is coupled by a pin and slot connection with a lever 73 which is pivoted at 74 to a bracket 75, (said bracket being secured to the under side of frame plate 12), and the other arm of which is coupled by a link 76 with a lever 77 mounted beside the lever 61 on pivot pin 62. A spring 78 is suspended from an anchorage on bracket 45 and connected to lever 73, exerting force thereon to hold a cam follower portion of lever 77 against a cam 79 on cam shaft 55.

These several cams and the crank pin 54 are suitably timed to cause withdrawal of the plungers from turret 18 prior to indexing movement of the latter and then, in the following order, advance plunger 23 into the lower end of the contiguous die 19, project the core rod 71 from the plunger, turn the metering head to deliver a quantity of powder into the die, and advance plunger 22 so as to exert a pressure against the mass of powder resting on the lower plunger. Sufficient pressure is thus exerted to cause the powder briquette to remain in the die while traveling to the main pressing position. When pieces without apertures are made, the core rod 71 may be removed, and solid plungers substituted for the recessed plunger 22 and tubular plunger 23.

The ejector 28, which is above the turret in alinement with the final position of the dies, is likewise operated by the cam shaft 55. It is carried by the lower end of a bar 80, which is movable endwise through guide passages in the frame plates 10 and 11 and is normally held above the turret by a spring 81. It carries a collar 82 in position to receive the impingement of a finger 83 carried by the cam shaft which is suitably located and proportioned to depress the ejector, while the camshaft turns counter-clockwise with respect to Fig. 7, far enough to displace the finished article from the subjacent die into a conduit or receptacle 84.

The main pressing action is performed when the die reaches the rearmost position shown in Figs. 5 and 8. The plunger (or ram-carrying) rods 24 and 25 are forced toward one another with

a powerful squeezing action by toggle linkages. These linkages are alike for both plungers. That for the upper plunger consists of double links 85 and 86 pivoted to a yoke 87, links 88 and 89 pivoted to a collar 90, and knuckle pins 91, connecting links 85 and 88 together, and 92 connecting link 86 to link 89. Yoke 87 surounds the plunger rod 24 and is anchored to the frame. The anchorage here shown is a sleeve 93 supported in frame plate 10 and through which the rod 24 is movable, the yoke being confined with provision for limited rocking movement, between said plate and a shoulder 94 on sleeve 93. Collar 90 surrounds the plunger rod and grasps it frictionally with sufficient force to raise the rod when the knuckle pins are moved apart to break the toggles, while permitting slip of the rod under the hammer impulsion later described. Adjustable means to maintain the described clutching effect after wear may be used. This collar impels the rod, when the toggles are straightened, by thrusting against a shoulder 95 on the rod.

The knuckle pin 91 of one toggle is connected by a link 96 with a pivot pin 97 carried by a rocker 98 which is supported rotatably in a bracket 99 suspended from the frame plate 10. The other toggle knuckle 92 is connected by two links, 100 and 101, which embrace the rod or bar 24, with pivot pins 102 and 103 mounted in alinement with each other at the diametrically opposite side of rocker 98 from the pivot 97.

Identical toggle links 104, 105, 106 and 107 are connected to a yoke 108 (which is confined between the bottom frame plate 13 and the shoulder 109), and a collar 110 which surrounds rod 25 and thrusts against a shoulder 111 thereon. The knuckle pins of the latter toggle are connected by an inner link 112 and two outer embracing links 113 with pins 114, 115 at diametrically opposite sides of a rocker 116 which is pivotally mounted on a bracket 117 secured to the bottom plate 13.

The two rockers 98 and 116 are operated by connecting rods 118 and 119 from crank pins 120 and 121 on a crank disk 122, the connecting rods being coupled with the rockers by pivots 120*a* and 121*a*. The several links and pivots are arranged so that, when crank pin 120 is on dead center with respect to connecting rod 118, the pivots 97, 102 and 103 are on dead center with respect to the links 96, 100 and 101, respectively, and ram 26 is fully advanced. The same conditions exist with respect to crank pin 121, connecting rod 119, the pivots 114 and 115, links 112 and 113, and ram 27. The throw of the cranks 120 and 121 and the displacement of the toggle links are made sufficient to withdraw the rams wholly from the turret 18.

The crank pins 120 and 121 are preferably nonsymetrical with respect to the axis of the crank disk and their respective connecting rods, in such manner that one crank pin approaches its dead center in advance of the other. Assuming that the pin 121 is the one in advance, this pin will reach and pass dead center while the crank pin 120 is approaching dead center, if their rotation is carried so far. Hence the rams, after entering the die, travel at unequal speeds and the mass of powder confined between them is shifted along the die while being compressed; at least during the final stages of compression. If the pin 121 is moved beyond dead center through a small angle while the pin 120 is coming near dead center, there will be a slight movement of both plungers in the same direction at the same time. Owing to the different speeds of the rams, there is less tendency for the compressed mass to seize on the die than there would be if it were compressed equally from both ends at equal speeds toward a fixed central position; and when the rams are thereafter moved in the same direction as above described, the likelihood of seizing is further reduced.

Crank disk 122 is mounted on a shaft 123 rotatable in a bracket 124 on the frame plate 12. This shaft is driven by a reversible electric motor 125 (secured to frame plate 12) which, for convenience, may be called the main motor, through a belt or chain 126, a sprocket 127 on a shaft 128, change gears 129 and 130, secured respectively to said shaft and to a shaft 131, a worm 132 on shaft 131, and a worm gear 133 meshing with worm 132 and secured to shaft 123.

When pieces with through passages are made, one of the rams is provided with a projecting rod to hold the passage open while pressure is applied; as shown in Fig. 3 with respect to ram 26. Such rod may be made of non-conductive material or of metal electrically insulated from one, or both rams. It is, of course, omitted, and rams with closed ends employed, when solid articles are made.

The rams or plungers 26 and 27 are the terminals of an electric welding circuit through which electric current of low voltage and high amperage is delivered to heat the metal powder, by the electrical resistance of the powder, to a temperature at which the particles are soft enough to be readily deformable, and will unite. They are of form and dimensions such that they may enter and fit closely but slidingly in the dies. Ram 26 is formed with an enlargement 134 back of its terminal extremity and with a flange 135 and centering lip 136 at its opposite end to bear on and embrace the end of plunger rod 24. It is secured to the plunger rod by a screw 137 and is insulated from the rod by sleeves and washers of insulating material, all comprehensively designated 138. Ram 27 is correspondingly formed and is secured to and insulated from the plunger rod 25 by duplicates of the same means, designated by the same reference characters.

Electrodes 139 and 140 surround the enlarged portion 134 of the respective rams with good electrical contact and a water tight fit. They are internally cored to provide chambers 141 through which water or other cooling fluid may be passed to keep the rams at a low temperature. They are connected by means of laminated flexible conductors 142 and 143 with the secondary winding of a high current transformer 144.

The dies 19 are each constructed of a series of rings in tandem arrangement and accurate alinement, supported in a shell or casing 145 by insulating material 146 which insulates them electrically from the shell. The rings may also be insulated from each other by thin washers of mica or the like to prevent a short circuit through them; but this is not of vital importance, for reasons later set forth, and each die may be made of a single solid piece. Such rings may be made of hard and tough metal finished internally to exact prescribed dimensions with polished surfaces. The several die casings 145 are provided with an inner flange at one end and a lock at the other end to retain the insulation 146, between which and the rams are air spaces wide enough to prevent leakage of current. They are fitted in suitably located holes extending through

the turret and are secured therein by set screws 147.

In addition to the pressure or squeeze loading, to which the metal powder briquette is subjected through the agency of the toggle linkages previously described, the briquette is further subjected to shock or impact loading applied by a hammer 148 to the ram 26 through the plunger rod 24. This hammer is mounted to slide on a guide 149 mounted on the uppermost frame plate, and is arranged to move in alinement with the plunger rod 24 and to impinge on a cap piece 150 secured to the upper end of said rod. It is coupled by a pin and slot connection 151 with a lever 152 which is pivoted at 153 to a bracket 154 secured to the top plate. An electric motor 155, which may be called the hammer motor, actuates the hammer through a train consisting of belt 156, pulley 157, shaft 158, worm 159, worm gear 160, shaft 161, change gears 162 and 163, shaft 164 and cam 165, cooperatively arranged as clearly shown in Figs. 1 and 4. This cam is located beneath the lever 152 and engages a projection 166 on the lever. In the form here shown, it is provided with a continuous rise through 360° of arc and a sharp drop, whereby it is adapted to raise the hammer, and permit descent of the hammer by gravity, once during each revolution.

This, however, is but one of several types of means which may be used for the purpose. For instance, I may use a cam designed to cause more than one hammer stroke during each revolution, or to cause a greater or less drop of the hammer than that here indicated, or to effect a series of hammer blows of progressively increasing force as the compression proceeds; or provide means for applying force other than gravity to the hammer. And by use of appropriate change gears 162—163, and timing means for starting and stopping motor 155, I may cause the hammer to deliver as many blows as desired during or after the advance of the rams. Any desired timing of the shock impacts with the pressure loading may be practised.

Indexing of the turret 18 is effected by an electric motor 167 under control of the pressure mechanism. Motor 167, which may be called the indexing motor, drives a pulley 168 on shaft 169 by a belt 170. Shaft 169 carries a worm 171 meshing with a worm gear 172 on the shaft 173, which turns in a bearing formed in a part of the bracket 124, and to which the turret is secured. Shaft 169 carries also a gear 174 which drives an index plate 175 through a compound gear 176, 177, of which one element meshes with gear 174 and the other with teeth on the circumference of the index plate. The index plate includes a flange 178 having a single notch arranged to be entered by the toe of a locking dog 179 which is mounted on a pivot 180. These parts are all cooperatively supported by rigid portions of the bracket 124.

An arm 181 forms a structural part of the dog 179 and extends to the opposite side of pivot 180 therefrom. A spring 182 is connected to arm 181 and acts so as normally to hold the dog in locking engagement with the index plate.

A striker 183 is connected to arm 181 by a pivot 184 and is weighted so that it bears against a stop pin 185. It projects into the path of a cam projection 186 on the circumference of crank disk 122, and has a beveled face arranged to be engaged with the beveled advancing face of cam 186 during the rotation of the crank disk in the direction which causes separation of the pressing rams. In the illustrated machine, as seen in Fig. 1, the direction referred to is clockwise and is indicated by the arrow A. When such engagement occurs, the cam projection is rising and the striker is blocked by the stop pin 185, so that arm 181 is displaced to the left, and dog 179 to the right, of the position shown in Fig. 1. Arm 181 controls a switch 187 in the circuit of the indexing motor, (further shown diagrammatically in Fig. 10). The arrangement of these parts is such that the initial movement imparted to the arm 181 closes the switch contacts, thereby energizing the motor 167, and thereafter the dog is fully withdrawn from the index plate. After cam 186 passes the striker, spring 182 holds the dog against the index plate ready to reenter the notch in the latter when the plate has made a complete revolution. On the reverse rotation of the crank disk, cam 186 displaces the striker in passing it without moving the lever. The cam is adjustable and is set to start the indexing action after the rams have withdrawn from the turret and before the crank disk has come to the end of its clockwise rotation.

It will be understood that the gearing 174—175 which drives the index plate is in ratio to the worm gearing 171—172 such that it turns the index plate through a complete rotation while the turret is turned through a quarter rotation; i. e., from one stopping place to the next. On the completion of such rotation of the index plate, the dog enters the notch in flange 178 and the arm 181 opens the switch 187, causing the indexing motor to stop.

The reversals and driving of the main motor 125 in opposite directions are controlled by cam projections 188 and 189 on the circumference of crank disk 122 coacting with limit switches 190 and 191 respectively, in a switch box 192, (Figs. 1 and 2). These limit switches are interconnected with the switch contact 187 as electric interlocks so as to prevent advance of the compression rams, after their retraction to permit indexing of the turret, until the indexing movement has been completed. Suitable electrical connections for the purpose are shown in the diagram, Fig. 10. It may be noted that in this diagram the crank disk 122 is in the position occupied when the rams are withdrawn, whereas Figs. 1–3 show the condition where the rams are fully advanced into a die.

All of these cam elements may be adjusted, or shifted to different positions, along the circumference of the crank disk in order to control and regulate the extent of penetration of the rams into the dies, short of or up to the limit established by the toggle linkages. The intensity of pressure loading on the charges of powder may be thus regulated, in conjunction with regulation of the quantity of powder, or the dimensions of the briquette, placed in the die.

An important part of the invention consists in methods of applying electric heating current, in conjunction with application of mechanical force, to the powder mass or briquette, and in means for carrying such methods into effect. The methods referred to include the steps of delivering heating current intermittently in impulses of shorter or longer duration, varying the intensity of the current thus delivered, and regulating the number, intensity and duration of current impulses according to the character of the material undergoing the consolidating treatment.

The effect of the current of high amperage

and low voltage is to heat the particles of the powder to a condition of plasticity at their points of contact. In the initial condition of the briquette, the particles of powder are in contact with one another at a comparatively few points of relatively narrow area. Resistance to flow of current from particle to particle is therefore very great, and is greatest at the points of contact which have the least area. These points are quickly brought to the plastic condition in which they join together cohesively and are sufficiently ductile to be readily deformed by the pressure. Such deformation enlarges the contact areas and causes the interparticles resistance to be diminished. With repeated impulses of current and continued pressure application, or repeated hammer blows, a progressive and irregular deformation of the particles occurs as the narrow contact areas become wider and the particles approach mutual conformity of shape.

The method of applying current in brief impulses, analogous to mechanical jolts or hammer blows, is of advantage over continuously passing current through the material, in a number of respects. It enables the heating effects to be accurately controlled. It avoids any serious heating of the die member even though the latter be continuously conductive and thus capable of furnishing shunt paths for the current. Due to the short duration of current flow during each impulse, the powder particles are heated to welding temperature at their contact points while the die is not heated objectionably. It enables the optimum treatment for any particular material or mixture of materials to be determined and accurately duplicated in treating successive powder masses of like composition.

By thus briefly applying current, and varying the strength and duration of different current impulses, the heat input and temperature may be easily and exactly controlled and adjusted to the characteristics of the metal operated on. At temperatures approaching their melting points, metals become plastic. The plastic range varies with different metals, but with most metals its lower limit is at a temperature considerably below the melting point. However, in some cases the plastic range is very narrow and close to the melting point. It is necessary to maintain the metal in the plastic range while pressing for, if the metal melts, due to too great an input of heat or to the die being too highly heated, it acquires the undesirable properties of cast metal upon cooling. There would also be a tendency for the metal to adhere to the die walls or the rams.

Metals that are not heated to the plastic stage have low strength, both in tension and compression, low density, and poor structure. They are liable to change their dimensions in unpredictable directions under subsequent heat treatment. But articles made from metal powders compressed while in the plastic stage retain the original characteristics of the metal. They have correct density and their micro structure usually shows a condition resembling that of a forged structure, but superior, in that the grains are usually finer and there are no flow lines or planes of weakness caused by drawn out inclusions.

One of the possible means for performing the methods referred to is shown diagrammatically in Fig. 10. Here P represents the primary, and S the secondary, windings of the high current transformer 144. The primary winding is tapped at various points and such tapping points are connected electrically with removable contact buttons 193 on a tap selector 194. A contact arm 195 is connected in the circuit and is arranged to pass from one contact button to the next in succession in time with the rotation of the crank disk 122. It may be carried by the crank shaft 123, or may be driven therefrom by intermediate gearing so as to turn through a larger or smaller arc than that through which the crank disk turns, if desired. The several contact buttons may be connected to any desired ones of the tapping points, so as to put different fractions of the primary winding in the circuit in any desired order. There may be more or fewer contacts 193 than the number shown here, with equal or unequal spacing as desired, and different ones may have a wider or narrower extent of contact area than others, whereby to vary the duration of the respective current impulses. Any of these contacts may be removed and wholly omitted, or others may be substituted for them. The capacity for adjustment and variation in these respects makes it possible to apply any desired number of current impulses during the cycle, to make such impulses longer or shorter, to make them of equal or unequal strength, and to apply relatively stronger or weaker current impulses in any desired sequence. For instance, the current may be progressively increased or decreased as the interparticle resistance diminishes with widened areas of contact, or an impulse of low strength may be administered between strong impulses, and vice versa.

A device for interrupting the transformer circuit in time with the movement of the selector arm is associated with the selector. This device comprises a cam 196 rotated in synchronism with the arm 195 and having projections 197 arranged to open a face plate interlock 198 in circuit with a line contact switch 199. The projections 197 are adjustable and removable for substitution of others subtending larger or smaller angles, to correspond with the spacing and extent of the selector contacts 193. They are located so as to open the switch 199 just before the selector arm leaves any one of the contacts 193 so as to avoid arcing and to prevent the transformer circuit from being closed whenever the selector arm bridges across two contacts. This device is timed also to insure that there will be no current in the electrodes when the rams are being retracted from the die.

The diagram further shows a starting switch 200 for the motor 66 of the measuring and precompression means, (called for convenience the loading motor), and a switch or interlock 201 for controlling the hammer motor 155. This interlock is shown as operated by a cam 202 on the crank shaft 123, which may be suitably designed to start and stop the hammer motor once or a number or times during the persistence of the continuous pressure loading. The diagram further shows main reversing switches 203 and 204 for the main motor 125; main switches 205, 206 and 207 for the loading motor, indexing motor and hammer motor, respectively; auxiliary starting devices for these several motors; and a time relay 208 in connection with the main motor switch 203 and the interlock 190. The function of this time relay is to delay reversal of the main motor after the rams have been pressed together, for such length of time as may be prescribed for hammering or persistence of the squeezing pressure and heating effect. Holding circuits are also provided in order to insure continual supply of current to the main motor. But as the details of

the electrical circuits and connections are not of the essence of the invention, but are within the field of electrical engineering design and may be widely varied, it is unnecessary to describe them here.

The intermittent impact loading applied by blows of the hammer supplements the progressive pressure loading and brings the particles more rapidly into conformity with one another. It overcomes the tendency of the particles to form bridges or arches which, in some circumstances, prevent consolidation of powder masses in their central portions. Preferably the current is interrupted when the hammer blows are struck, so that lines of magnetic force, which cause bridging effect, then disappear. The hammer action may be continued after the end of the pressing operation, or may be applied only at the end of that operation, or not at all.

Various modifications from the construction and combination here shown may be made within the scope of this invention. Thus the precompression step performed by the plungers 22 and 23 may be omitted and the powder may be loaded in a loose condition into the dies when in the final compressing location. Preliminary compression, however, is desirable, as it brings the particles into a relation to one another which promotes and hastens the heating effect under the electric current.

Any powders which have sufficient conductivity to permit current flow, and sufficient resistance to be heated to ductility when in contact at a limited number of points of small area, may be treated by the procedure here described. It is particularly effective, however, with the harder and more resistant metals, such as iron, iron alloys, and still harder metals and alloys. Powder mixtures of metals and non-metallic substances may likewise be converted into finished products of considerable strength, provided enough metal is present to afford conductive paths for the current.

The phase of the invention which comprises heating simultaneously with pressure application is not limited exclusively to the production of a heating effect by electrical resistance, or even to heating the powder while in the die itself. For some classes of material the heating effect may be obtained by induction, i. e., concentration of lines of magnetic force by high frequency current passed through coils surrounding the dies. Or powder briquettes previously heated to high temperature, (for instance, approaching white heat), may be placed in the dies while in loading position, and then compressed and forged by the rams in the forging position.

Products of many different forms and dimensions may be made according to the procedure here described by the selection of dies and complemental plungers and rams of appropriate forms and dimensions. Gears, other machine elements, armor piercing projectiles for artillery and small arms, and many other articles may be thus made. The resulting pieces are substantially without voids, have a density closely approximating the density of the constituent particles, and a perfection of dimensions and surface finish exceeding that obtainable by any method of casting. Products too hard to be finished economically by metal cutting tools may be thus made with an accuracy closely approximating that obtainable by the most accurate machining or grinding operations.

What I claim and desire to secure by Letters Patent is :

1. An apparatus for hot pressing metal powder, comprising a die, rams arranged to confine a mass of powder in said die, a source of electric current in circuit connection with said rams for producing a flow of current from one ram to the other through the metal powder between them, means for exerting pressure loading on one of said rams and advancing the same toward the other, and means for varying the intensity of the current during the advance of one ram toward the other.

2. An apparatus for hot pressing metal powder, comprising a die, rams arranged to confine a mass of powder in said die, a source of electric current in circuit connection with said rams for producing a flow of current from one ram to the other through the metal powder between them, means for exerting pressure loading on one of said rams and advancing the same toward the other, means for applying impact loading to one of said rams during the persistence of such pressure loading, and means for interrupting and varying the intensity of the electric current in the course of such pressure and impact loadings.

3. An apparatus for hot pressing metal powder, comprising a die, rams arranged to confine a mass of powder in said die, a source of electric current in circuit connection with said rams for producing a flow of current from one ram to the other through the metal powder between them, means for exerting pressure loading on one of said rams and advancing the same toward the other, means for repeatedly applying impact loading to one of said rams simultaneously with the exertion of such pressure loading, and means for interrupting the current while the impact loadings are applied and causing current flow between the repetitions of the impact loading.

4. A powder compressing apparatus comprising a molding die, rams disposed to enter said die from opposite ends thereof, plungers carrying said rams, toggle linkages mounted for operation to exert pressure on said plungers, each in the direction toward the other, and common operating means coupled to both said linkages for bringing them toward the maximum pressure-exerting condition simultaneously, one of said plungers being connected with its toggle linkage with capability for movement independently thereof in the direction of the pressure application exerted by said linkage, and means for applying impact loading to said plunger during persistence of the pressure exerted by the linkage.

5. A powder compressing apparatus comprising a molding die, rams disposed to enter said die from opposite ends thereof, toggle linkages mounted for operation to exert pressure on said rams, each in the direction toward the other, common operating means coupled to both said linkages for bringing them toward the maximum pressure-exerting condition simultaneously, one of said rams being movable independently of its toggle linkage in the direction of the pressure application exerted by said linkage, a hammer disposed for operation to apply impact loading to the last named ram in the same direction, and means correlated with said operating means to actuate said hammer for the purpose set forth while the associated toggle linkage is in pressure exerting condition.

6. A powder compressing apparatus comprising a molding die, rams disposed to enter said die

from opposite ends thereof, toggle linkages mounted for operation to exert pressure on said rams, each toward the other, correlated cranks cooperatively related with the respective toggle linkages to cause approach of the toggles toward straightened condition while the cranks approach their dead center locations, one of said cranks being in advance of the other whereby to approach dead center sooner than the other.

7. The method of transforming metal powder into solid articles, which consists in placing a charge of metal powder in a die, advancing a ram into the die, applying pressure of progressively increasing intensity to the ram, passing a current of electricity through the mass of powder under compression in sufficient quantity to cause heating and softening of the particles of powder at their points of mutual contact, and altering the amount of current so passing while the powder is under compression.

8. The method of bonding discrete metal particles into a solid body, which consists in confining a quantity of such particles in a closed space, passing electric current in intermittent impulses of brief duration, and of strength sufficient to make the particles plastic at their points of mutual contact, through such mass, and exerting pressure on the mass while the particles are in plastic condition at their contact points.

9. The method of bonding discrete metal particles into a solid body, which consists in confining a quantity of such particles in a closed space, passing electric current in intermittent impulses of brief duration, and of strength sufficient to make the particles plastic at their points of mutual contact, through such mass, exerting pressure on the mass while the particles are in plastic condition at their contact points, and varying the current strength of different current impulses.

10. The method of converting discrete metal particles into cohesive solid bodies, which consists in placing a mass of such particles in a closed space, passing an electric current through the mass of particles in sufficient strength to make the particles plastic at their points of mutual contact, applying pressure to said mass in a succession of impacts, and interrupting the current flow while such impacts are applied.

11. The method of bonding discrete metal particles into a cohesive body, which consists in placing a mass of such particles in a closed space, exerting progressively increasing pressure on the particles so confined, passing an electric current, of intensity sufficient to make the particles plastic at their points of mutual contact, through such mass, in a series of intermittent impulses during the progress of the pressing action, and superimposing on the continuous pressure loading a succession of impact loadings.

12. The method of bonding discrete metal particles into a cohesive body, which consists in placing a mass of such particles in a closed space, exerting progressively increasing pressure on the particles so confined, passing an electric current of intensity sufficient to make the particles plastic at their points of mutual contact, through the mass, in a series of intermittent impulses during the progress of the pressing action, superimposing on the continuous pressure loading a succession of impact loadings, and timing the impact loading with the intermittent current application to cause occurrence of the impacts when there is no current passing through the mass.

WALTER F. ROSS.