April 12, 1955 L. G. EHMANN 2,706,061

MATERIAL HANDLING EQUIPMENT FOR INDUSTRIAL TRUCKS

Filed March 13, 1951 2 Sheets-Sheet 1

FIG. 1.

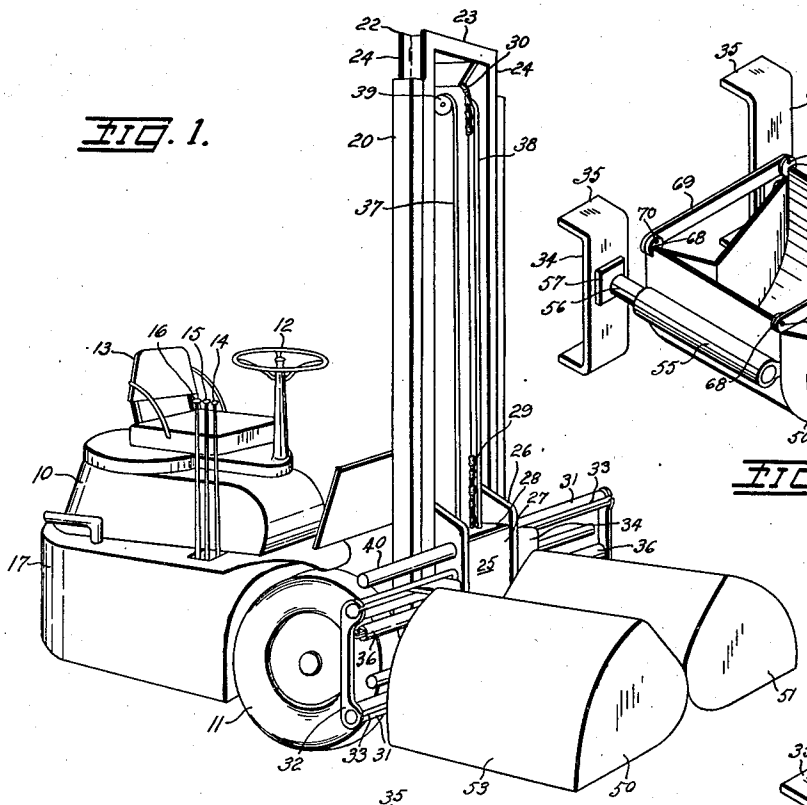

FIG. 3.

FIG. 2.

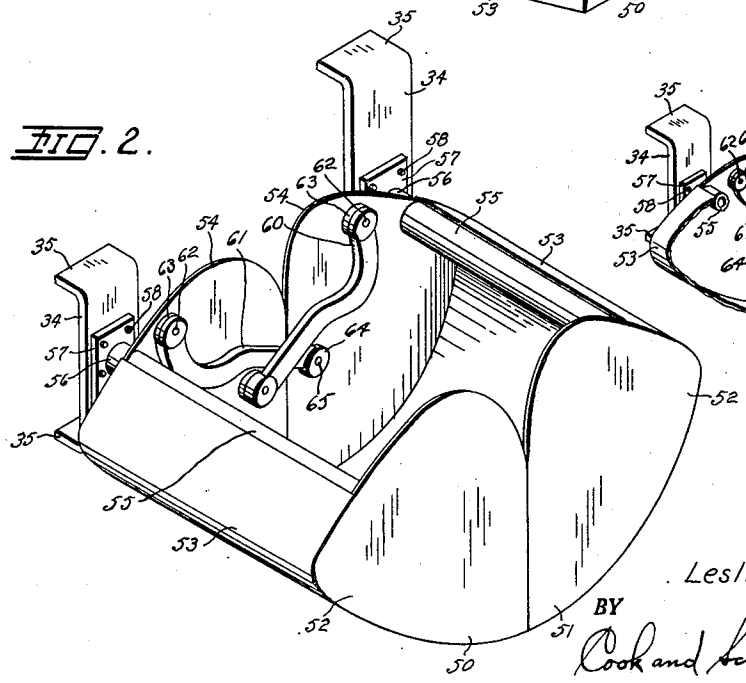

FIG. 2a

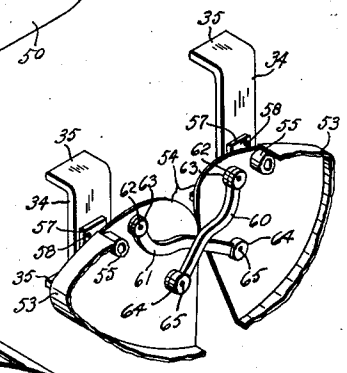

INVENTOR.
Leslie G. Ehmann
BY
Cook and Schermerhorn
ATTORNEYS

April 12, 1955 L. G. EHMANN 2,706,061

MATERIAL HANDLING EQUIPMENT FOR INDUSTRIAL TRUCKS

Filed March 13, 1951

2 Sheets-Sheet 2

FIG. 4.

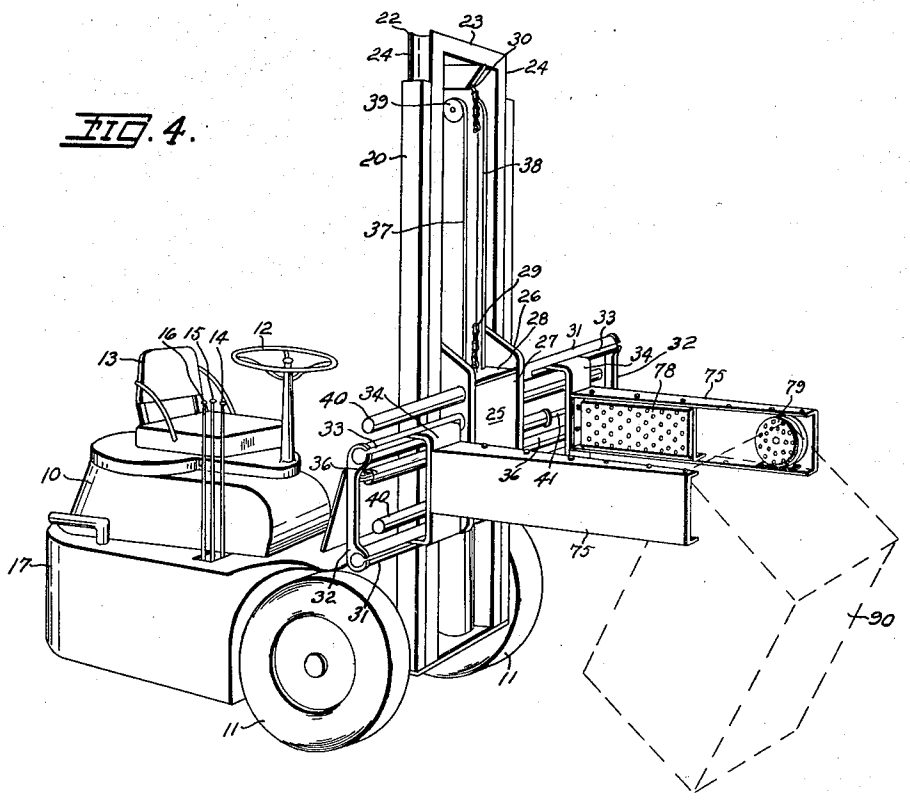

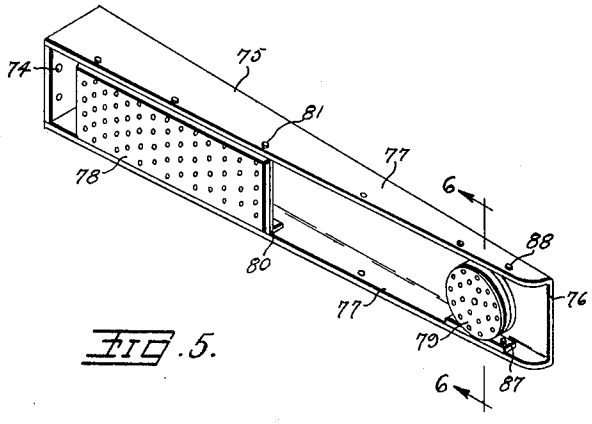

FIG. 5.

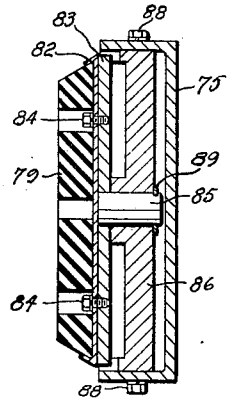

FIG. 6.

INVENTOR.
Leslie G. Ehmann

BY
Cook and Schermerhorn
ATTORNEYS

United States Patent Office

2,706,061

Patented Apr. 12, 1955

2,706,061

MATERIAL HANDLING EQUIPMENT FOR INDUSTRIAL TRUCKS

Leslie G. Ehmann, Portland, Oreg., assignor to Hyster Company, Portland, Oreg., a corporation of Oregon

Application March 13, 1951, Serial No. 215,263

5 Claims. (Cl. 214—653)

This application is a continuation-in-part of application Serial No. 32,429, filed June 11, 1948, now Patent No. 2,571,550, granted October 16, 1951.

This invention relates to material handling equipment for use on industrial lift trucks or the like.

It is an object of the present invention to provide load carrying members which are readily attached to and detached from a lift truck or the like, to extend the usefulness of the truck. A particular object is to provide novel and improved load carrying members on a lift carriage having laterally extensible and retractible load supporting arms.

Another object of the invention is to provide a clamshell bucket mechanism to be mounted on a lift truck for picking up and carrying loose materials.

Another object is to provide a clamshell bucket with a novel linkage to open and close the bucket by the operation of existing control levers on a truck of the type described.

Other objects are to provide load carrying members for handling and manipulating different types of materials or containers, to provide load carrying members which eliminate the use of pallets, and to provide load carrying members with rotatable gripping surfaces.

The apparatus of the present invention is utilized to especial advantage on industrial lift trucks equipped with extensible and retractible load supporting arms. On such trucks the load arms are mounted on a lift carriage having suitable operating means such as hydraulic cylinder and piston rod units for extending and retracting the arms. One form of the invention comprises a novel clamshell bucket arrangement adapted to be mounted on and operated by a special form of load arms. The special load arms comprise cylindrical trunnion arms for the pivotal mounting of the two bucket halves. The two bucket halves may be pivotally interconnected by a pair of crossed links so that the bucket will open when the arms are moved together, or may be so pivoted as to open when the arms are moved apart.

Another form of the invention comprises a pair of load clamping arms equipped with rotatable pads to grip articles to be lifted. By thus gripping and lifting one end of a box or the like, the box may be upended or turned over as desired without manual handling. Spaced from the rotatable pads are fixed pads to prevent tipping when the grip is shifted. The use of such clamping arms facilitates the picking up of articles without the articles first being piled on pallets because a direct hold can be obtained on a box, bundle, or the like.

The invention will be better understood and additional objects and advantages will become apparent from the following description in connection with the accompanying drawings illustrating preferred embodiments of the invention. It is to be understood, however, that the invention may take other forms, and all such modifications as will be obvious to persons skilled in the art are included in the invention.

In the drawings:

Figure 1 is a perspective view of a lift truck showing the present clamshell bucket installed thereon, with the bucket fully open;

Figure 2 is a perspective view of the clamshell bucket of Figure 1 detached from the lift truck, showing the bucket in closed position;

Figure 2*a* is a fragmentary perspective view showing the bucket partially open;

Figure 3 is a perspective view of a modified form of clamshell bucket;

Figure 4 is a perspective view of a lift truck having load carrying arms equipped with rotatable pads;

Figure 5 is an enlarged perspective view of one of the load carrying arms shown in Figure 4; and

Figure 6 is a sectional view, taken on the line 6—6 of Figure 5.

In Figure 1 the invention is illustrated in connection with a lift truck **10** having a pair of engine driven front wheels **11** and a single rear wheel, not shown, which is steerable by the usual hand wheel **12**. The numeral **13** designates the driver's seat which is accessible to the necessary controls for driving the vehicle, and also to levers **14**, **15** and **16** for controlling the load handling mechanism. In this type of truck, the load is carried entirely in front of the front wheels **11**, and so the rear end **17** of the vehicle is usually equipped with a heavy counterweight in addition to the weight of the engine to hold the rear end of the vehicle down.

Such lift trucks are further equipped with an upright frame **20** on the front of the truck to guide a lift frame **22**. The lift frame **22** has a top horizontal cross member **23** and a pair of vertical members **24** mounted for vertical sliding movement in the upright frame **20**. The lift frame **22** may be raised by various means, such as a vertical hydraulic cylinder (not shown) having a piston with a piston rod extending upwardly to support the top cross member **23**. Lift trucks of this type are equipped with a hydraulic pump for operating various hydraulic instrumentalities such as the vertical cylinder for the lift frame **22** and a cylinder for tilting the upright frame **20**. The lift cylinder is controlled by a valve lever such as the lever **14** in Figure 1, and the cylinder for tilting the frame is controlled by a valve lever such as the lever **16**. The mechanism of the present invention includes additional hydraulic cylinders which are intended to be supplied from the hydraulic pressure system of the vehicle.

The truck is provided with a lift carriage designated generally by the numeral **25**. The lift carriage **25** is equipped with rollers (not shown) mounted on side plates **26** for vertical movement in the lift frame **22** with a minimum of friction. The carriage frame also includes a front bumper guard plate **27** and cross member **28** extending between the side plates **26**. The lift carriage **25** is supported by a link chain **29** having one end secured to the cross member **28** and an intermediate portion trained over a sheave **30** in a sheave mounting on the upper cross member **23** of the lift frame **22**, the chain having its other end anchored at the bottom of the upright frame **20**. The above described arrangement is such that when hydraulic pressure is admitted to the lower end of the vertical lift cylinder by manipulation of the lever **14**, its piston is forced upwardly to elevate the lift frame **22** and sheave **30** to raise the carriage **25**.

Two pairs of parallel horizontal tubular guides **31** extend through aligned holes in the side plates **26** and are integrally attached thereto as by welding. The outer end of each pair of guides **31** is provided with a spacing member or plate **32** which is welded to the guides to make the members **32** integral parts of the carriage **25**. Each of the guide tubes has a slot **33** and slidably mounted within each of the guide tubes **31** is a slide **40**. Each pair of the slides **40** is integrally connected at its outer end by a cross head member **34** having horizontal end portions **35** extending through and adapted to slide in the slots **33**. The ends of the guide tubes are left open for the ends of the slides to project therethrough when the cross head members are extended and retracted.

The cross head members **34** are extended and retracted by hydraulic pressure from a pair of horizontal cylinders **36** extending in opposite directions through holes in the side plates **26**. Each cylinder is pivotally connected at one end to one of the end plates **32** of the lift carriage. Within each of the cylinders **36** is a piston having a piston rod **41** (see Figure 4) pivotally connected at its outer end to one of the cross heads **34**. The cross head members **34** are extended by pumping hydraulic fluid into the outer ends of the two cylinders through

suitable pressure and return lines 37 and 38 which are trained over a pair of sheaves 39 at the top of the lift frame 22 to travel with the lift chain 29 without producing slack in the conduits. The flow of hydraulic fluid is controlled by the operator by manipulation of the lever 15 which is connected with a four-way reversing valve. When lever 15 is moved in one direction fluid under pressure enters the inner ends of the cylinders 36 through conduit 37 and fluid from the outer ends of the cylinders returns through conduit 38. When the lever 15 is moved in the opposite direction, the conduit 38 becomes the pressure line and the conduit 37 becomes the return line. The lever 15 has an intermediate rest position in which the fluid flow is blocked and the pistons in the hydraulic cylinders are held in fixed positions.

The general arrangement of parts thus far described comprises one form of lift truck to which the present load handling equipment may be applied, but it is to be understood that the invention may also be applied to other trucks and apparatus not possessing these specific features.

In Figure 1 a preferred form of a clamshell bucket is shown in open position and in Figure 2 it is shown closed. Figure 2*a* shows the same bucket partly open. The bucket structure may be readily bolted to the movable cross head members 34 for picking up loose material such as grain, coal, or the like from warehouse floors or boxcars, for removing snow from streets or sidewalks, or in general construction work for picking up and carrying loose dirt, gravel and a multitude of other materials.

As seen in Figures 2 and 2*a*, the bucket structure comprises two bucket halves 50 and 51 each having end plates 52 and a curved plate 53 forming the bottom and side walls. The curved wall portion 53 is integrally connected to the end plates and extends sufficiently around the end plates to provide the desired capacity. The top edges 54 of the end plates 52 in Figure 2 are rounded as shown to rock on each other in opening and closing movements of the bucket.

The two bucket halves 50 and 51 are each provided with a tubular sleeve 55 extending between the end plates and through the end plates at one end of the bucket. The sleeves 55 receive supporting trunnion arms 56 and are rotatable thereon for the opening and closing of the two bucket halves. The trunnion arms 56 are each carried by a base plate 57 which may be bolted to a movable cross head member 34 by bolts 58. The clamshell bucket is thereby easily attached to the cross head members by inserting the bolts 58 therein, and the device is also easily detached when a different form of load handling mechanism is to be installed. In Figures 2 and 2*a* it is to be understood that cross head members 34 are permanently attached to slides 40 and are not detached therefrom in mounting or removing the special equipment described herein. The rest of the lift carriage is merely omitted in these views. In changing the accessory equipment, the slides 40 may be removed along with trunnion arms 56, if desired.

The bucket is constructed so that upon inward or retracting movement of the cross head members 34 the bucket will open. This mode of operation is accomplished by a pair of crossed links 60 and 61 pivotally mounted to the bucket halves by pins 62 and 65. The links are formed with end bosses 63 and 64 for spacing the links from end plates 52 different distances to clear each other without rubbing. The link 60 is spaced farther from the end plates than link 61 so that the link 60 will travel freely over the link 61 when the bucket halves are moved relative to one another. Also, the links may be identical by forming the end bosses to protrude more on one side of the link than the other so that the links can be crossed. The link 61 in such case is mounted on the bucket with the short bosses engaging the bucket end wall to form a bearing surface thereagainst and the link 60 is merely turned over to present the longer bosses toward the bucket end wall, thereby placing the links in different planes.

The crossed links 60 and 61 are connected to the bucket halves at points selected to produce a mechanical advantage such that the bucket will open fully when the cross head members 34 are moved inwardly only a short distance. The links each extend downwardly from an upper point on one of the bucket halves to a lower point on the other bucket half, and movement of the cross head members 34, therefore, controls the movement of the oppositely disposed bucket half. When the bucket opens, the end plates 52 roll upwardly against each other on their curved edges 54 which provide a bearing surface therefor, until, as seen in Figure 1, the bucket halves have rotated to their fully open and inverted position. The links are curved so that when the bucket is open each link will clear the upper boss 63 of the other link.

In operating the clamshell bucket, the operator manipulates the levers 14 and 15, the lever 14 controlling the vertical movement of the lift carriage, and the lever 15 controlling the horizontal movement of the cross head members 34. To pick up a load of loose material, the lever 15 is manipulated to bring the cross head members inwardly, opening the bucket, as desired, above the material to be picked up. Lever 14 is manipulated to adjust the height of the carriage and the bucket to the floor surface. Movement of the lever 15 to its opposite position extends the cross head members to close the bucket on its load, whereupon the lever 15 is moved to its rest or neutral position which locks the piston rods in the cylinders 36 to hold the bucket halves together. The carriage and bucket may then be raised off the floor surface by manipulating the lever 14.

A modified form of clamshell bucket is shown in Figure 3. The bucket halves 50*a* and 51*a* are carried by tubular sleeves 55 mounted on cylindrical trunnion arms 56. Each arm 56 is carried by a base portion 57 which may be bolted to the movable cross head member 34 by bolts 58 as in Figure 2. The upper end of each of the bucket members 50*a* and 51*a* is provided with ears 68 which are pivotally connected to a pair of cross links 69 by pins 70 whereby, when the cross heads 34 are moved apart, the bucket is opened at the bottom, and when the cross heads are moved together the bucket is closed. The action is the reverse of that of the bucket in Figure 2.

The cross head members 34 may also be equipped with other types of load handling devices, one such device being shown in Figures 4 to 6. In these views are illustrated an improved load arm 75 for handling boxes and the like. The arm 75 comprises a channel member having a vertical web portion 76 with inwardly directed top and bottom horizontal flanges 77. The arms are preferably not exactly parallel but slightly convergent toward their outer ends to compensate for a certain unavoidable amount of elastic deformation of the apparatus under the maximum possible pressure which may be developed by the pistons in cylinders 36 in gripping a box. The desired convergence is obtained by the angular relation of the base end of the arm to the plane of web 76, the base end having holes 74 to receive screws or bolts into the cross head member 34.

Each of the load carrying arms 75 is equipped with two different forms of gripping devices. The inner end of the arm carries an elongated rubber pad 78. The outer end of the arm carries a small rubber pad 79 mounted for rotation in the channel of the arm. The pad 78 is mounted on a channel plate 80 which is secured to the channel of the arm 75 by machine screws 81, or the like, which extend through apertures in the flanges. The rubber pad 79 is mounted on a backing plate 82, best seen in Figure 6, which in turn is secured to an annular plate 83 by machine screws 84. The plate 83 carries a stub shaft 85 which is journaled in a bearing in a supporting member 86. Integral with the supporting member 86 are plates 87, Figure 5, receiving machine screws 88, or the like, extending through apertures in the flanges, whereby the support member 86 is held rigidly in the arm 75 and the rubber pad is rotatable. Stub shaft 85 is held in place by a retainer 89.

Figure 4 shows a pair of the arms 75 attached to the cross head members 34 of the lift truck. Boxes or the like may be picked up and carried between the arms, utilizing both pads 78 and 79 to obtain a firm grip on the box without damage, the compression necessary to exert a firm grip on the box taking place in the rubber cushions 78 and 79 rather than in the box itself. The revolving pad 79 is useful for gripping the corner or end of a box 90, as shown in dotted lines, either to tip the box up on its end or to lay it down on its side. After the box has been placed in the desired position by use of the rotatable pads 79, the truck is driven forward to grip the box with both pads 78 and 79 on each arm to lift the box, the pads 79 then having a supporting function but being unable to rotate. In this manner, heavy articles may be turned

over and stacked in different positions with a minimum of effort and lost motion, and without manual assistance.

Having now described my invention and in what manner the same may be used, what I claim as new and desire to protect by Letters Patent is:

1. A load handling mechanism comprising a load carriage, a pair of channel-shaped load carrying arms mounted on said carriage for lateral extension and retraction to embrace opposite sides of an article to be lifted, and load engaging pads mounted in the channels of said arms in longitudinally spaced relation and secured to the flanges of the channel, each arm having one pad fixedly mounted in the arm at a distance from the outer end of the arm and one pad at the outer end of the arm mounted for rotation in a vertical plane.

2. A load handling mechanism comprising a load carriage, a pair of load carrying arms mounted on said carriage for lateral extension and retraction to embrace opposite sides of an article to be lifted, load engaging elements on the ends of said arms rotatable in vertical planes, and additional load engaging elements fixed to said arms at a distance from said rotatable elements.

3. In a load handling mechanism having a pair of load carrying arms retractable and extendable toward and away from each other for embracing opposite sides of an article to be lifted, a pair of coaxial rotatable load engaging pads mounted in opposed relation, one on the end of each arm, for tilting or upending an article engaged solely by said rotatable pads, and additional load engaging pads on said arms for engaging an article jointly with said rotatable pads to prevent tilting of the article.

4. In a load handling mechanism having a pair of load carrying lift arms retractable and extendable toward and away from each other for embracing opposite sides of an

article to be lifted, a rotatable load engaging pad on the outer end of each arm, the two pads being disposed in opposed coaxial relation for tilting or upending an article engaged solely by said rotatable pads in two point support, and additional load engaging pads on said arms at a distance from the rotatable pads and extending toward the inner ends of the arms to engage an article jointly with said rotatable pads in four point support to prevent tilting of the article.

5. A lift truck load arm comprising an elongated channel member having a vertical web portion and horizontal flange portions, a base member detachably connected with said flange portions at the outer end of the arm, a rotatable gripping pad on said base member, a second base member detachably connected with said flange portions near the inner end of the arm, and a gripping pad fixedly secured to said second base member.

References Cited in the file of this patent

UNITED STATES PATENTS

1,490,664	Eidmann	Apr. 15, 1924
2,468,999	Pettler	May 3, 1949
2,469,812	Breslav	May 10, 1949
2,475,367	Avery	July 5, 1949
2,497,118	Ferrario et al.	Feb. 14, 1950
2,554,433	Warren	May 22, 1951
2,571,550	Ehmann	Oct. 16, 1951
2,604,220	Frischmann	July 22, 1952
2,611,497	Backofen	Sept. 23, 1952

FOREIGN PATENTS

633,180	Great Britain	Dec. 12, 1949