Nov. 8, 1949 M. CLAR 2,487,312

PEN, PENCIL AND GENERAL UTILITY CLIP

Filed Aug. 23, 1944

Fig. 1.

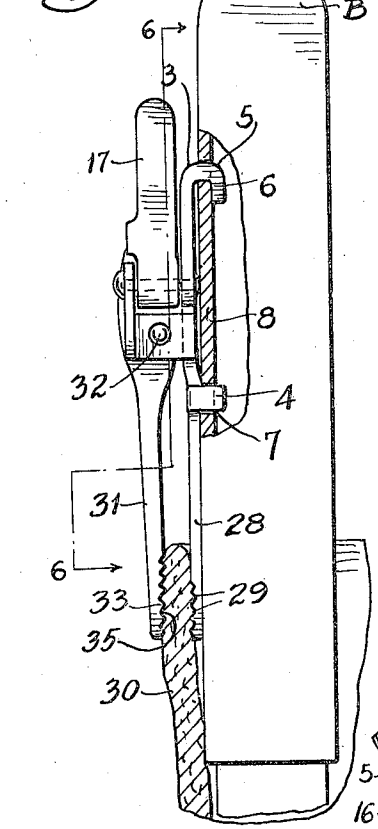

Fig. 2.

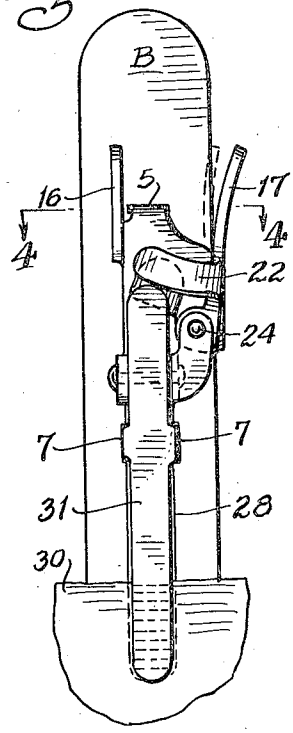

Fig. 3.

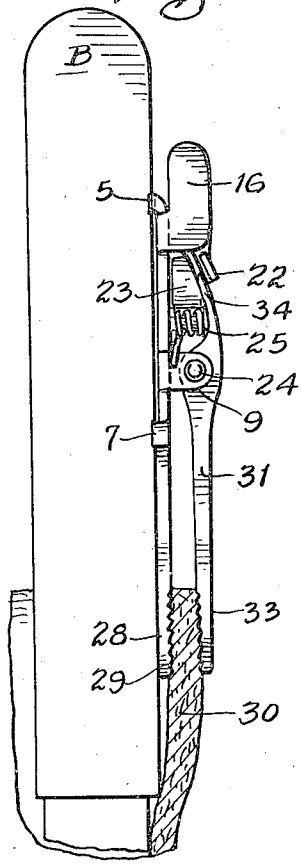

Fig. 4.

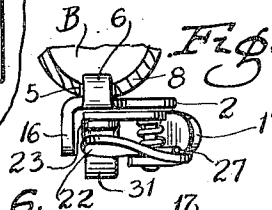

Fig. 5.

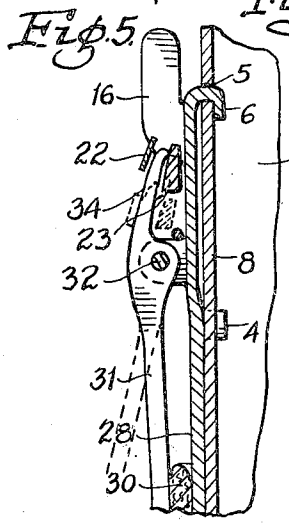

Fig. 6.

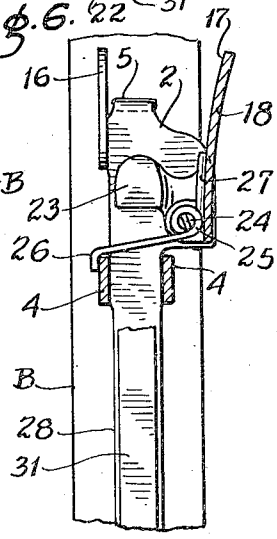

Fig. 7.

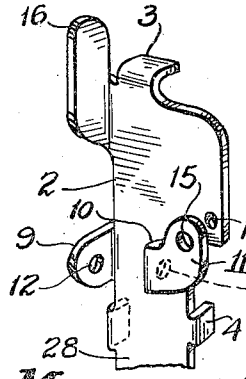

Fig. 8.

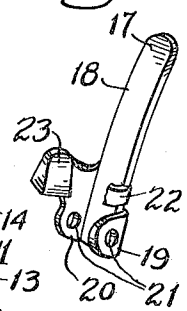

INVENTOR.
MOTTEL CLAR
BY W. E. Williams
ATTORNEY.

Patented Nov. 8, 1949 2,487,312

UNITED STATES PATENT OFFICE

2,487,312

PEN, PENCIL, AND GENERAL UTILITY CLIP

Mottel Clar, Torrance, Calif.

Application August 23, 1944, Serial No. 550,807

3 Claims. (Cl. 24—11)

1

My invention relates to pen, pencil and general utility clips used in the form of clasps which clamp a loose article to a carrying body and are more generally used for clamping pens and pencils into the edge of a pocket to hold the article in a given position in the pocket or in some other location where the article to which it is attached may hold the pen or other article in secure position and the article be easily attached and firmly held in place as desired, and correspondingly be easily removed as and when needed.

An object of my invention is to provide a more secure fastening means than has heretofore been employed in clips of this class for holding the article against accidental displacement.

Another object of the invention is to provide more secure fastening means without requiring the user of my clip to employ extra pressure with the fingers when applying it to or releasing it from the pocket or other support.

Other objects of the invention will be indicated herein.

Reference will be had to the accompanying drawings in which:

Figure 1 is an edge view, partly in section, of my invention attached to what is indicated as a pen or pencil body.

Figure 2 is a front elevational view of what is shown in Figure 1.

Figure 3 is a similar view to that of Figure 1 indicating the reverse side of my invention.

Figure 4 is a top plan view, partly in section taken on line 4—4 in Fig. 2, of what is shown in Figures 1, 2 and 3.

Figure 5 is a sectional view similar to that of Figure 1, being a central section.

Figure 6 is a front elevational sectional view looking in the direction indicated at 6—6 in Figure 1.

Figure 7 is a perspective view of the base plate of the clip.

Figure 8 is a perspective view of a member before assembly with the base plate shown in Figure 7.

In the drawings there is shown the body part of a pen or pencil which I choose to call the barrel thereof, indicated by B. Insofar as my invention is concerned, it can be fastened to any supporting means of suitable character as desired.

My clip is provided with a base frame plate 2 (Figs. 6 and 7) of any suitable construction and I show this base 2 provided with a single top projection 3 and two side projections 4 at the bottom of the plate 2. These projections 3 and 4 are shown as entered into notches into the base or barrel B and clinched over the inside of the barrel, as shown by the projection 3 being entered into the notch 5 and turned over on the inside, as indicated by 6, see Figure 1. The projections 4 being two in number, are entered

2

into notches 7 at the bottom of the base 2. Thus the base 2 is securely fastened in the wall 8 of the barrel B.

While I prefer to use the above means of fastening the base 2 to the barrel B, any other suitable means may be employed for fastening my clip to its supporting means. This may be accomplished by riveting or by bands which will embrace the barrel B when so desired.

The base 2 is provided with a lug 9 which may be integral with the base 2 or may be a separate piece firmly fixed to the base 2, likewise the base 2 is provided with a lug 10 which has a surface paralleling the inside of the lug 9 and it too may be integral with the base 2 or may be composed of a separate piece attached to the base in any suitable manner. The lug 10 is provided with a projection 11 which is turned over to form a surface substantially parallel to the flat surface of the base 2. The lugs 9 and 10 are provided with bearing openings 12 in the lug 9 and 13 in the lug 10, the latter indicated in dotted lines in Figure 7. A bearing opening 14 is shown in the base 2 in line with a bearing opening 15 in the projection 11.

The clip is provided with finger and thumb projections or contact pieces, one of which being a projecting thumb or finger abutment 16 integral with the base 2 or permanently fixed thereto, and the other a thumb or finger piece 17, which is a part of the peculiarly shaped block 18 (Fig. 8). The block 18 is provided at its bottom with flanges 19 and 20 in which are formed axially aligned pin holes 21.

Above the flanges 19 and 20 on the block 18 an inclined arm flange 22 on the front side is indicated in Figures 2, 4 and 8. In Figure 8 the outside end of this flange is broken away for purposes of illustration. On the other side of the block 18, as shown by Figure 8, there is an inclined or wedge projection 23 integral with the block 18. This block 18 becomes a moving part when the finger or the thumb of the user of the clip engages the finger piece 17 in applying and releasing the clip from its supporting body, as shown in dotted lines in Fig. 5. The block 18 is mounted into the base 2 by a hinge pin 24 which passes through flanges 19 and 20 of the block 18 and through the holes 12 and 13 when the block 18 is mounted in the base 2.

Mounted on the pin 24 there is coiled a spring wire 25, one end 26 of which contacts one of the projections 4 of the base 2, see Figure 6. The other end 27 of this spring wire 25 extends upwardly and contacts the block 18, and thereby holds the block 18 spread apart from the thumb or finger piece 16, see Figure 6.

The base 2 has a projection 28 which extends downwardly terminating in a serrated inside end 29, see Figures 1 and 3. This portion of the base

2 becomes one of the clamping fingers of the clip which enters the inside of the pocket of the wearer, the cloth of the pocket being indicated by 30.

A clasp piece 31 is hinged at 32 in the holes 12 and 13 of the lugs 9 and 10 of the base 2. This clasp is provided with a clamping end 33, the inside surface 35 of which is roughened in the same manner as the lower end 29 of the base 2.

The actuating end 34 of the clasp 31, see Figure 5, projects upwardly between the arm projection 22 and the inclined or wedge projection 23. Thus when the block 18 is rocked on the hinge pin 24 by the action of the spring 25, the inclined surface of the projection 23 presses the actuating end 34 of the clasp 31 outwardly from the base 2 and thereby effects a clamping of the pocket 30 between the clasp ends 29 and 33 under tension of the spring 25. As the user presses the end 17 of the block 18 toward the projection 16 of the base 2, the clasp end 34 is moved inwardly toward the base 2, and clamping end 33 is moved outwardly from the end 28 of the base 2 and thus releases contact with the pocket or other support 30. This inward movement of the finger end 34 is brought about by inwardly directed pressure applied to it by the inner inclined surface of the arm 22. The upward and downward movements of the inclined or wedge projection 23 and the arm 22 around the hinge pin 24 thus oscillates the clasp 31 into and out of clamping engagement with support 30.

By my construction a relatively weak spring 25 will actuate the movement of the block 18 to cause its inclined surface 23 to exert a greater clamping pressure on the support 30 than the direct pressure of the spring itself could provide.

What I claim is:

1. In a general utility clip, a plate fixed to a supporting base and having an outwardly facing surface, a stationary clasp member on said plate and projecting laterally therefrom, a movable clasp member pivotally mounted on said plate for oscillation on an axis substantially parallel to said plate surface, a clasp arm and an actuating end on said movable clasp member located on opposite sides of said axis, a clamp block mounted on said plate for movement transversely to said plate surface, an inclined surface and a flange on said block in opposing spaced relation one to the other and receiving between them said clasp actuating end, pressure applying means mounted on said plate and applying pressure against said block to move it in a direction away from said clasp actuating end, a finger piece on said block and an abutment on said plate spaced from said finger piece, whereby manual application of pressure to said finger piece and abutment effects movement of said block toward said clasp actuating end to apply pressure through said block flange to said clasp actuating end in a direction laterally of the path of said block movement to separate said movable and stationary clasp members, and upon removal of said manual pressure said block inclined surface, under pressure of said pressure applying means, oscillates said clasp actuating end to swing said movable clasp member toward said stationary clasp member, thereby to clamp a suitable support between said clasp members.

2. In a general utility clip, a plate fixed to a supporting base and having an outwardly facing surface, a stationary clasp member on said plate and projecting laterally therefrom, a movable clasp member pivotally mounted on said plate for oscillation on an axis substantially parallel to said plate surface, a clasp arm and an actuating end on said movable clasp member located on opposite sides of said axis, a clamp block mounted on said plate for movement across said surface, an inclined surface and a flange on said block in opposing spaced relation one to the other and receiving between them said clasp actuating end, pressure applying means mounted on said plate and applying pressure against said block to move it outwardly, a finger piece on said block and an abutment on said plate spaced from said finger piece, whereby manual application of pressure to said finger piece and abutment effects inward movement of said block toward said clasp actuating and to apply pressure through said block flange inwardly to said clasp actuating end to separate said movable and stationary clasp members, and upon removal of said manual pressure said block inclined surface, under pressure of said pressure applying means, oscillates said clasp actuating end outwardly to swing said movable clasp member toward said stationary clasp member, thereby to clamp any suitable support between said clasp members.

3. In a general utility clip, a plate fixed to a supporting base and having an outwardly facing surface, a stationary clasp member on said plate and projecting laterally therefrom, a movable clasp member pivotally mounted on said plate for oscillation on an axis substantially parallel to said plate surface, a clasp arm and an actuating end on said movable clasp member located on opposite sides of said axis, a clamp block comprising a wedge-shaped member and a flange, said block being pivotally mounted on said plate for oscillation on an axis substantially at rightangles to said plate surface, an inclined surface of said wedge-shaped member and the inner face of said flange being in opposed spaced relation and receiving said clasp actuating end between them, a spring mounted on said plate and applying pressure against said block to oscillate the latter outwardly, a finger piece on said block and an abutment on said plate spaced from said finger piece, whereby manual application of pressure to said finger piece and abutment effects inward oscillation of said block to apply pressure inwardly to said clasp actuating end by said block flange to separate said movable and stationary clasp members, and upon removal of said manual pressure said block inclined surface, under pressure of said spring, oscillates said clasp actuating end outwardly to swing said movable clasp member toward said stationary clasp member, thereby to clamp any suitable support between said clasp members under pressure applied by said spring.

MOTTEL CLAR.

REFERENCES CITED

The following references are of record in the file of this patent:

UNITED STATES PATENTS

Number	Name	Date
1,059,051	Lapp	Apr. 15, 1913
1,810,304	Tangen	June 16, 1931
2,268,116	Gordon	Dec. 30, 1941

FOREIGN PATENTS

Number	Country	Date
142,708	Great Britain	May 13, 1920