PCT WORLD INTELLECTUAL PROPERTY ORGANIZATION
International Bureau

INTERNATIONAL APPLICATION PUBLISHED UNDER THE PATENT COOPERATION TREATY (PCT)

(51) International Patent Classification 3 :		(11) International Publication Number: WO 83/ 03075
B41J 13/00	A1	(43) International Publication Date: 15 September 1983 (15.09.83)

(21) International Application Number: PCT/SE83/00072

(22) International Filing Date: 4 March 1983 (04.03.83)

(31) Priority Application Number: 8201399-6

(32) Priority Date: 8 March 1982 (08.03.82)

(33) Priority Country: SE

(71) Applicant *(for all designated States except US):* FACIT AKTIEBOLAG [SE/SE]; S-597 00 Åtvidaberg (SE).

(72) Inventor; and
(75) Inventor/Applicant *(for US only) :* PERSSON, Göte, Christer [SE/SE]; Berggårdsvägen 3, S-597 00 Åtvidaberg (SE).

(74) Agents: GAMSTORP, Bengt et al.; Telefonaktiebolaget LM Ericsson, S-126 25 Stockholm (SE).

(81) Designated States: DE (European patent), FR (European patent), GB (European patent), JP, NL (European patent), US.

Published
With international search report.

(54) Title: PAPER ADVANCING DEVICE IN PRINTERS, TYPEWRITERS OR THE LIKE OFFICE MACHINES PROVIDED WITH A PAPER MAGAZINE

(57) Abstract

The invention relates to a paper advancing device in a printer, typewriter or like office machine (11) provided with a paper magazine (10), said machine including friction feed means (19, 20) for advancing a sheet (29) of paper past a printing apparatus arranged in the machine, the paper magazine similarly being provided with friction feed means (15) adapted for coaction with those of the machine, for transferring a sheet from the paper magazine to a printing start position in the machine. A sensing means (27) is adapted to indicate passage of the forward edge of a sheet (29) which is transferred to the machine (11), said indication controlling the magazine friction feed means (15) for advancing the sheet a predetermined distance from the moment of indication into contact with the friction feed means (19, 20) of the machine, both friction feed means (15; 19, 20) being adapted for coaction during the continued conveyance of the sheet (29) to the print start position, the magazine friction feed means (15) being activated at least as long as any part of the sheet (29) is in contact therewith.

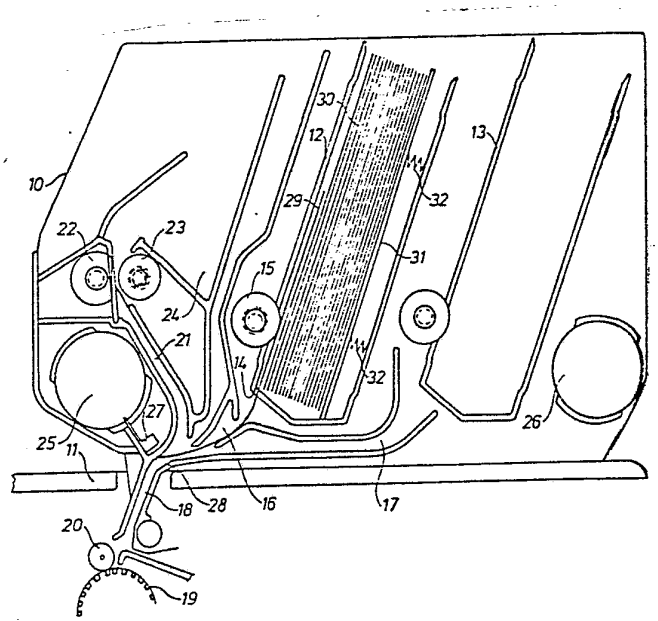

FOR THE PURPOSES OF INFORMATION ONLY

Codes used to identify States party to the PCT on the front pages of pamphlets publishing international applications under the PCT.

AT	Austria	**LI**	Liechtenstein
AU	Australia	**LK**	Sri Lanka
BE	Belgium	**LU**	Luxembourg
BR	Brazil	**MC**	Monaco
CF	Central African Republic	**MG**	Madagascar
CG	Congo	**MR**	Mauritania
CH	Switzerland	**MW**	Malawi
CM	Cameroon	**NL**	Netherlands
DE	Germany, Federal Republic of	**NO**	Norway
DK	Denmark	**RO**	Romania
FI	Finland	**SE**	Sweden
FR	France	**SN**	Senegal
GA	Gabon	**SU**	Soviet Union
GB	United Kingdom	**TD**	Chad
HU	Hungary	**TG**	Togo
JP	Japan	**US**	United States of America
KP	Democratic People's Republic of Korea		

PAPER ADVANCING DEVICE IN PRINTERS, TYPEWRITERS OR LIKE OFFICE MACHINES PROVIDED WITH A PAPER MAGAZINE.

TECHNICAL FIELD

The present invention relates to a printer, typewriter or like office machine provided with a paper magazine and particularly relates to a paper advancing device for such a machine.

BACKGROUND ART

In a known printer with a separate paper magazine coupled to the printer, transfer of a sheet from the magazine to the printer takes place so that friction drive means arranged in the printer takes hold of, and pulls the sheet out of the magazine. In this movement the sheet in turn drives friction drive means with which it is in frictional engagement in the magazine, and the movement of this drive means can be detected e.g. by a code disc coupled to the drive means, the code disk activating a transducer during its rotation. When such movement is indicated, the magazine friction drive means is activated and gives advancing assistance for a predetermined distance, subsequent to which such help ceases until the paper is stretched, to once again drive the magazine friction drive means, for movement thereof to be detected by the transducer. In the known embodiment, there is a great risk of slip occurring in the friction drive means of the machine, and this can result in a sheet being advanced on the skew.

One method of avoiding the above-mentioned slip is to let the machine give an order for advancing assistance from the paper magazine simultaneously as it starts its own friction feed. Advancing assistance can then be given under the major portion of the transfer distance. However, advancing assistance must be broken off during the latter part of conveying the sheet, due to variation in the length of the sheet. For example, if the magazine is allowed to give advancing assistance for a distance which is too long, there is the risk that subsequent sheets are also advanced a minor amount. The advancing errors thus occurring will accumulate, so that after a plurality of sheet advances it may happen that simultaneously with a sheet being correctly advanced into the printer, subsequent sheets will at least partially be

BUREAU OMPI WIPO

fed into it with a breakdown of the paper feed as a result.

In paper magazines of the kind mentioned, it is usual to arrange some form of separation means, for ensuring that only one sheet at a time is advanced from the magazine. A separation means often used comprises two oblique edges extending in over and partially covering the forward corners, seen in the advancing direction, of a paper holder arranged in the magazine. There is thus achieved that the uppermost sheet in the holder will be liften in its central portion on being advanced, while the forward corners are retained by the oblique edges and the sheet is separated from remaining sheets in the holder before the sheet is entirely released from these oblique edges.

In accordance with what has been mentioned above, it is a desire that the uppermost sheet in the magazine is advanced without subsequent sheets being affected. If advancing assistance is to be obtained from the magazine along the entire length of the sheet, a subsequent sheet may also be somewhat affected, so that it assumes its curved separating position. If the sheet remains thus for any length of time, it may receive a durable deformation which makes subsequent conveyance through the magazine and the paper channels arranged in the printer more difficult. To obviate this problem it is desirable that the magazine advancing assistance is extended so that a subsequent sheet is also advanced so far that the separation position has been passed, although without the occurrence of any accumulated advancing error, as mentioned above.

DISCLOSURE OF THE INVENTION

The invention has the object of removing the drawbacks mentioned above, and of providing a paper advancing device of the kind in question, allowing a sheet of paper to be transferred without being pulled out of line and with controlled advance of subsequent sheets from the paper magazine to a printing start position in the typewriter. The object is achieved with a paper advancing device having the characterizing features disclosed in the following claims.

BUREAU OMPI WIPO INTERNATIONAL

BRIEF DESCRIPTION OF DRAWINGS

An embodiment of the invention will now be described with reference to the appended drawings.

Figures 1-3 schematically illustrate a section through a paper magazine connected to a printer, with a sheet of paper depicted in different positions during transfer from the magazine to the printer.

Figures 4 and 5 are also sections as in Figures 1-3 but depict the path of a sheet while being advanced from the printer to the paper magazine.

A paper magazine 10 is schematically illustrated in Figure 1, and arranged above the printer, which is only indicated in the Figure and denoted by the numeral 11. Two paper holders 12, 13 are arranged in the magazine, each having at their lower edges an aperture 14 through which the sheets are advanced. There is also an opening in each holder accomodating a friction drive roll 15 engaging against the uppermost sheet 29 of a stack 30 of sheets in the holder. Engagement pressure between the drive roll 15 and the sheet is created by a movable side wall 31, against which the stack in the holder rests, the side wall being urged against the drive roll by springs 32. A chute 16 from the holder 12 and a chute 17 from the holder 13 guide a sheet from the respective holder into a feed channel 18 from the paper magazine. The channel 18 opens out into a friction feed means arranged in the printer in the shape of a friction belt 19 and associated backup rolls, of which an upper one is illustrated in the Figure and has the denotation 20.

BEST MODE FOR CARRYING OUT THE INVENTION

For advancing a ready-printed document 34 to the paper magazine, the latter has a channel 21 for leading the document via a drive roll 22 and associated backup roll 23 to a collection compartment 24. A motor 25 is adapted for driving the drive roll 22 and the drive roll 15 associated with the holder 12, via unillustrated toothed belts. In a corresponding manner, a motor 26 is adapted for driving the drive roll associated with the holder 13. For sensing the position of a sheet which is to be advanced into, or out from, the printer there is arranged a

BUREAU OMPI WIPO INT.

reflecting opto-unit 27, e.g. comprising a light emitting diode and a phototransistor. The diode emits light towards a reflecting surface 28, from which the light is reflected towards the phototransistor. When a paper intervenes between the opto-unit 27 and the reflecting surface 28, substantially less light will be reflected back again to the opto-unit phototransistor, which can thereby indicate that the forward edge of the paper, seen in the advancing direction, has passed.

It is assumed for the following description of the function of the paper advancing device that the advancing sequence is controlled by a unit arranged in the printer, and not more closely described, said unit preferably being a microcomputer. An advancing sequence is accordingly initiated by the control unit giving an order for the transfer of a sheet from the paper magazine. The motor 25 then starts and the drive roll 15 advances the uppermost sheet 29 in the paper holder 12 to the position shown in Figure 1, in which the paper is just about to pass the light rays from the opto-unit. When the light rays have been passed, the unit 27 gives a signal to the control unit ordering the motor 25 to drive the roll 15 to advance the paper a predetermined distance, namely to the position illustrated in Figure 2, in which the sheet is inserted in the space between the friction drive belt 19 and the backup roll 20 in the printer. The control unit orders advance of the sheet with a certain excess, resulting in that the forward edge of the sheet is urged into said space. The control unit now orders a motor (unillustrated), arranged in the printer, to start the friction belt 19 for continued advance of the sheet to a printing start position in the printer. The control unit simultaneously requests advancing assistance from the paper magazine, resulting in that the drive roll 15 is also activated. Advancing help remains as long as any part of the sheet is in contact with the drive roll 15.

Oblique edges covering the forward corner edges of the paper are arranged in the paper holder 12 in conjunction with the advancing aperture 14. The object of this is to ensure that only one sheet at a time is advanced. To enable advancing asssistance along the whole length of the paper, the drive roll 15 is coupled in for a length of time such that a subsequent sheet 33 is also advanced a minor distance. The advantage of this is that the subsequent sheet is advanced such that it

passes the separating edges and thus assumes a flat unaffected condition. No accumulated advancing errors occur if the advance of the subsequent sheet is stopped before the forward edge thereof has passed the opto-unit 27. When the first sheet has left the drive roll 15 and the latter has caused the short advance of the subsequent sheet, the motor 25 is stopped and the friction drive belt 19 by itself advances the sheet to the print start position.

A ready-printed document is advanced via the paper channel 21 by the drive roll 22 and backup roll 23 to the collection compartment 24. The opto-unit can here be utilized for indicating that a sheet is fed up from the printer and also that the sheet has passed the common paper channel 18, so that a new sheet can be fed down from the paper magazine. Figure 4 illustrates a sheet during advance through the paper channel 21, while Figure 5 shows the paper in the collection compartment 24.

BUREAU OMPI INTERNATIONAL

CLAIMS

1. A paper advancing device in printers, typewriters or like office machines (11) provided with a paper magazine (10), said machine also including a friction feed means (19, 20) for advancing a sheet (29) of paper past a printing unit arranged in the machine, the paper magazine including a sheet separating means and being further provided with friction feed means (15) adapted to coact with the friction feed means (19, 20) of the machine for transferring a sheet from the paper magazine to a printing start position in the machine, there being sensing means (27) adapted for indicating the passage of the forward edge of a sheet (29) which is transferred to the machine (11), characterized in that the sensing means signal controls the friction feed means (15) of the magazine to advance the sheet a predetermined distance from the instant of indication into contact with the friction feed means (19, 20) of the machine with an excess accommodatable in the paper magazine (10), subsequent to which both friction feed means (15; 19, 20) are adapted for coaction during continued conveyance of the sheet (29) to the printing start position, the friction feed means (15) of the paper magazine being adapted to advance a subsequent sheet (33) also, apart from the uppermost sheet (29) as long as the forward edge of the former has passed the separating means.

2 Device as claimed in claim 1, characterized in that the sensing means (27) is located such that the short advance of subsequent sheets (33) past the separating means is enabled without the forward edge of the sheet reaching the sensing means.

BUREAU OMPI WIPO INTERNATIONAL

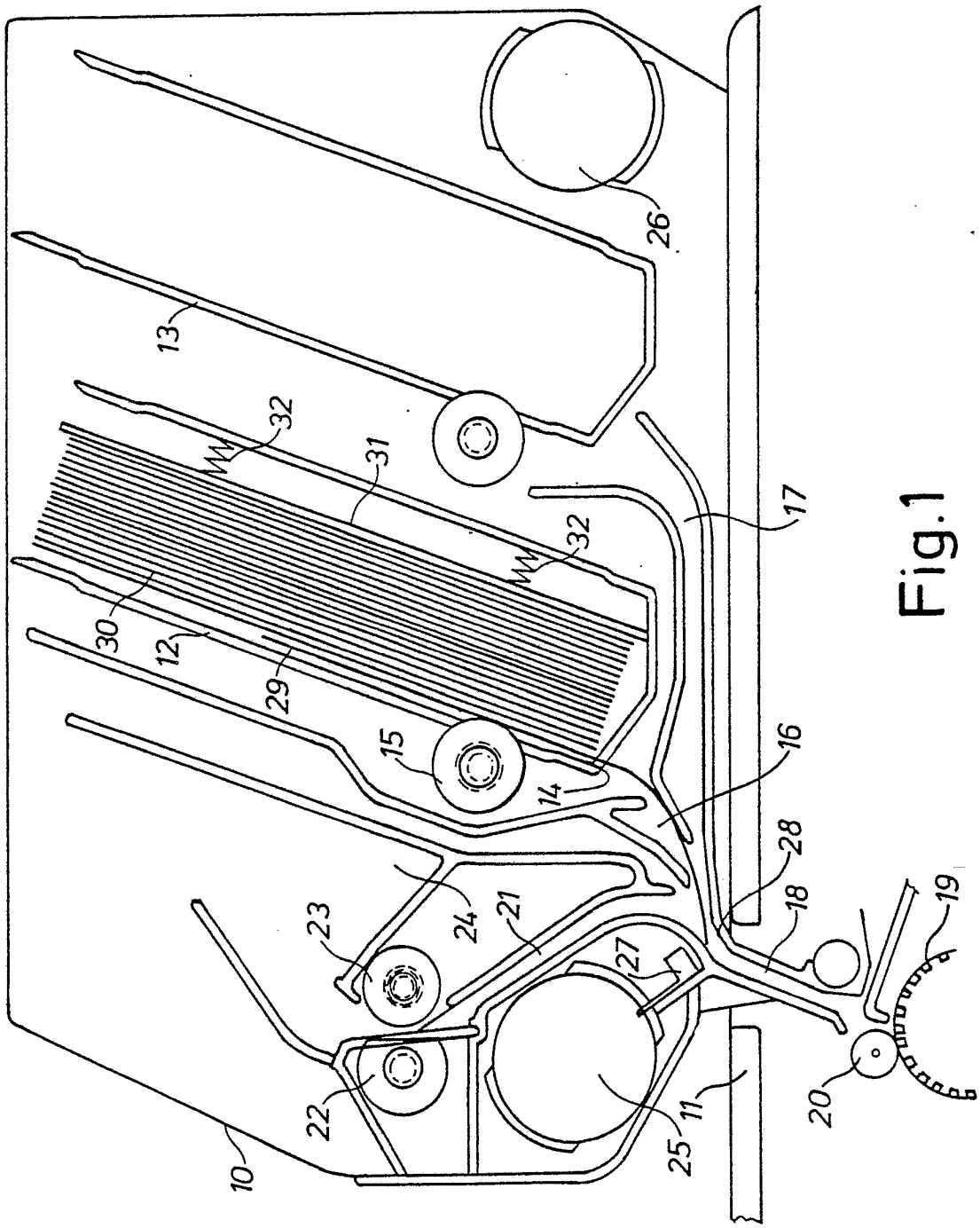

Fig.1

BUREAU OMPI WIPO INTERNATIONAL

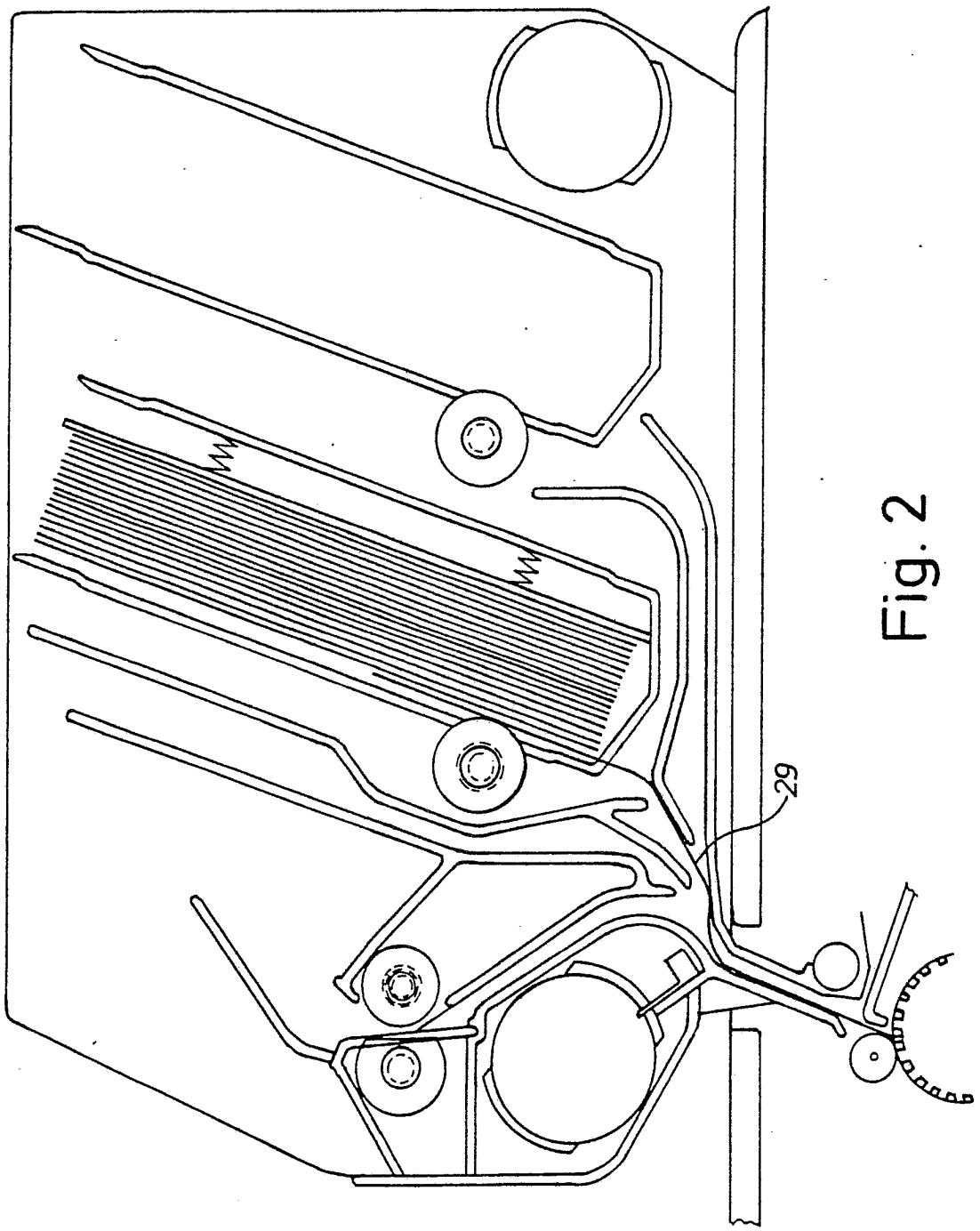

Fig. 2

BUREAU OMPI WIPO INTERNATIONAL

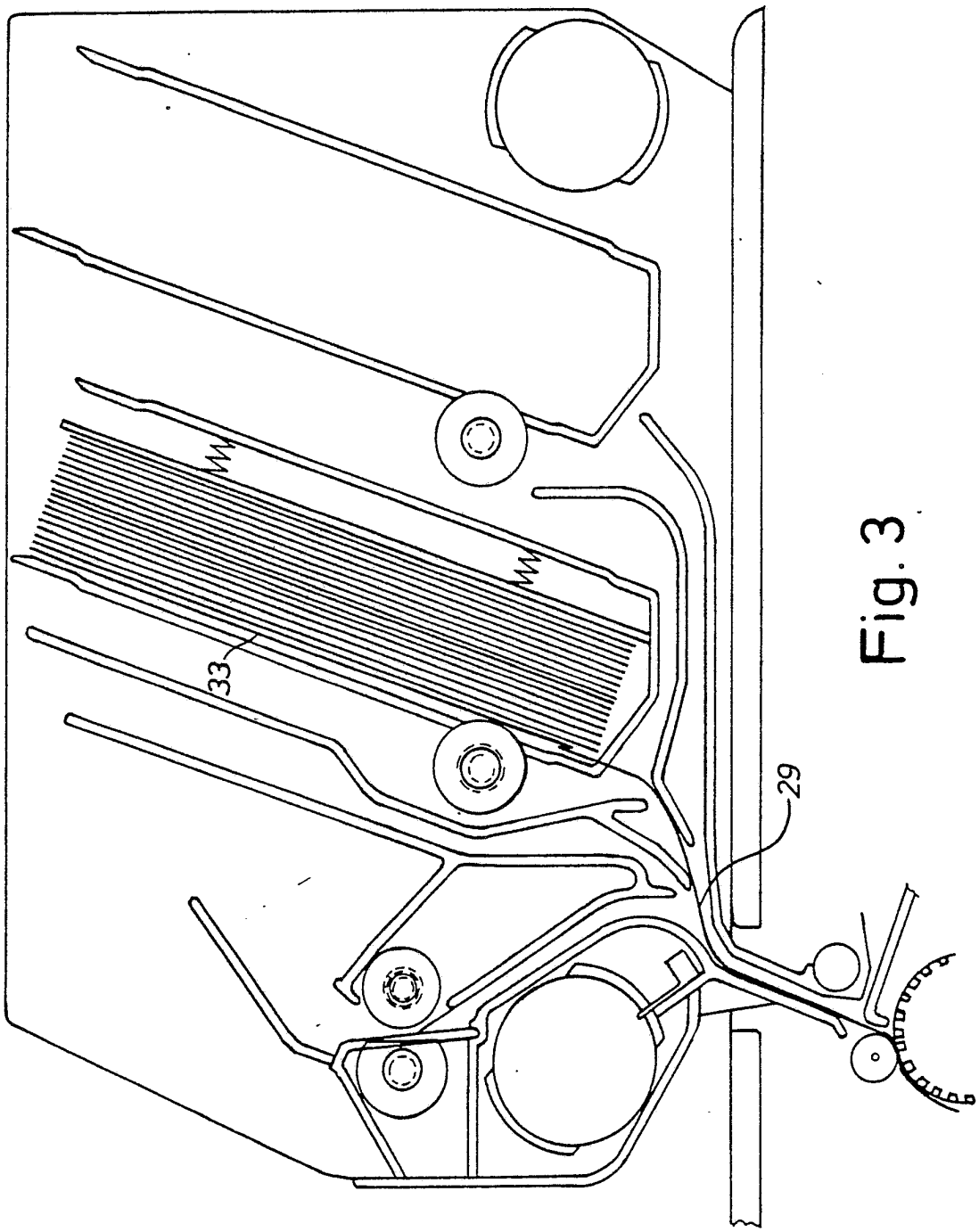

Fig. 3

BUREAU OMPI

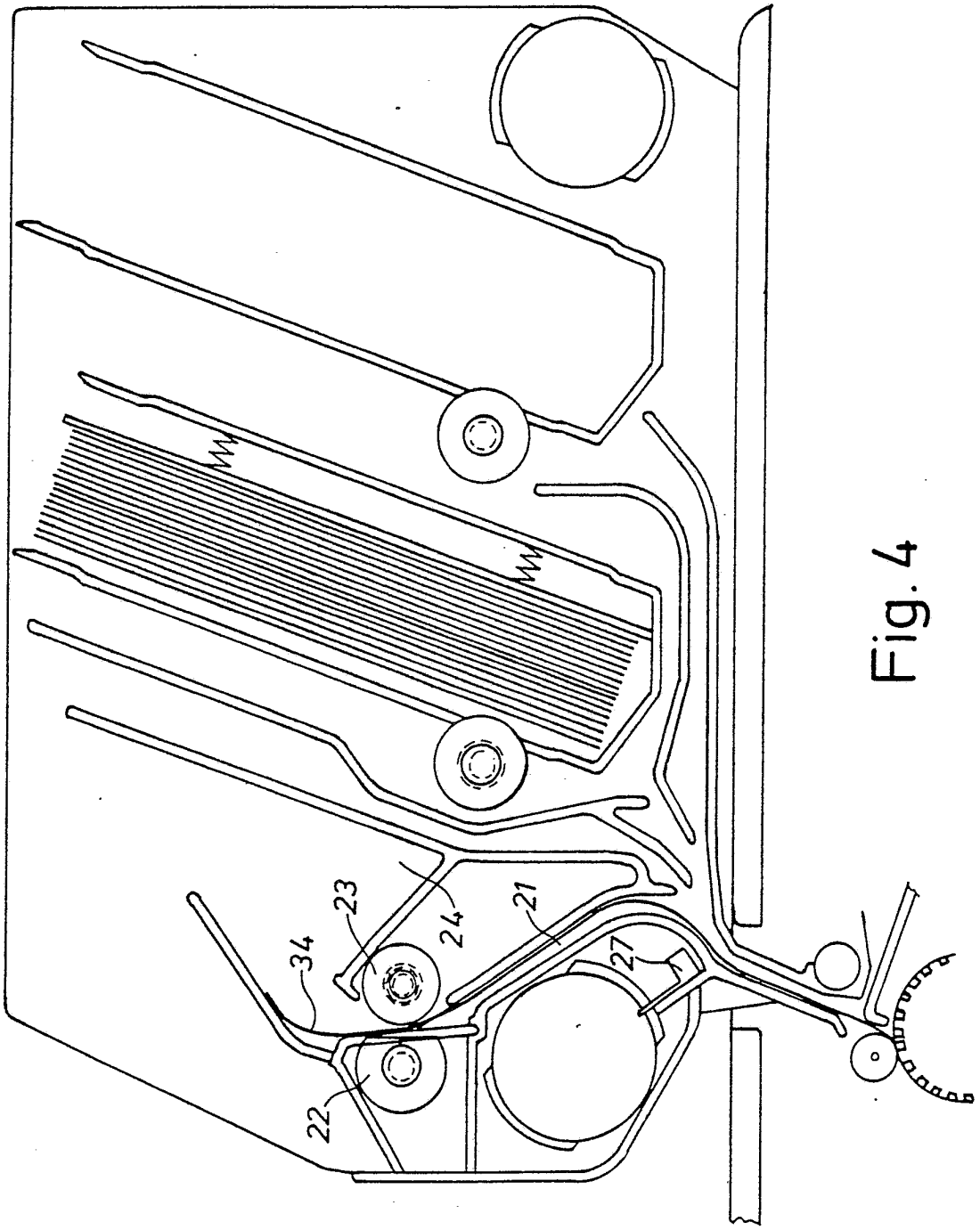

Fig. 4

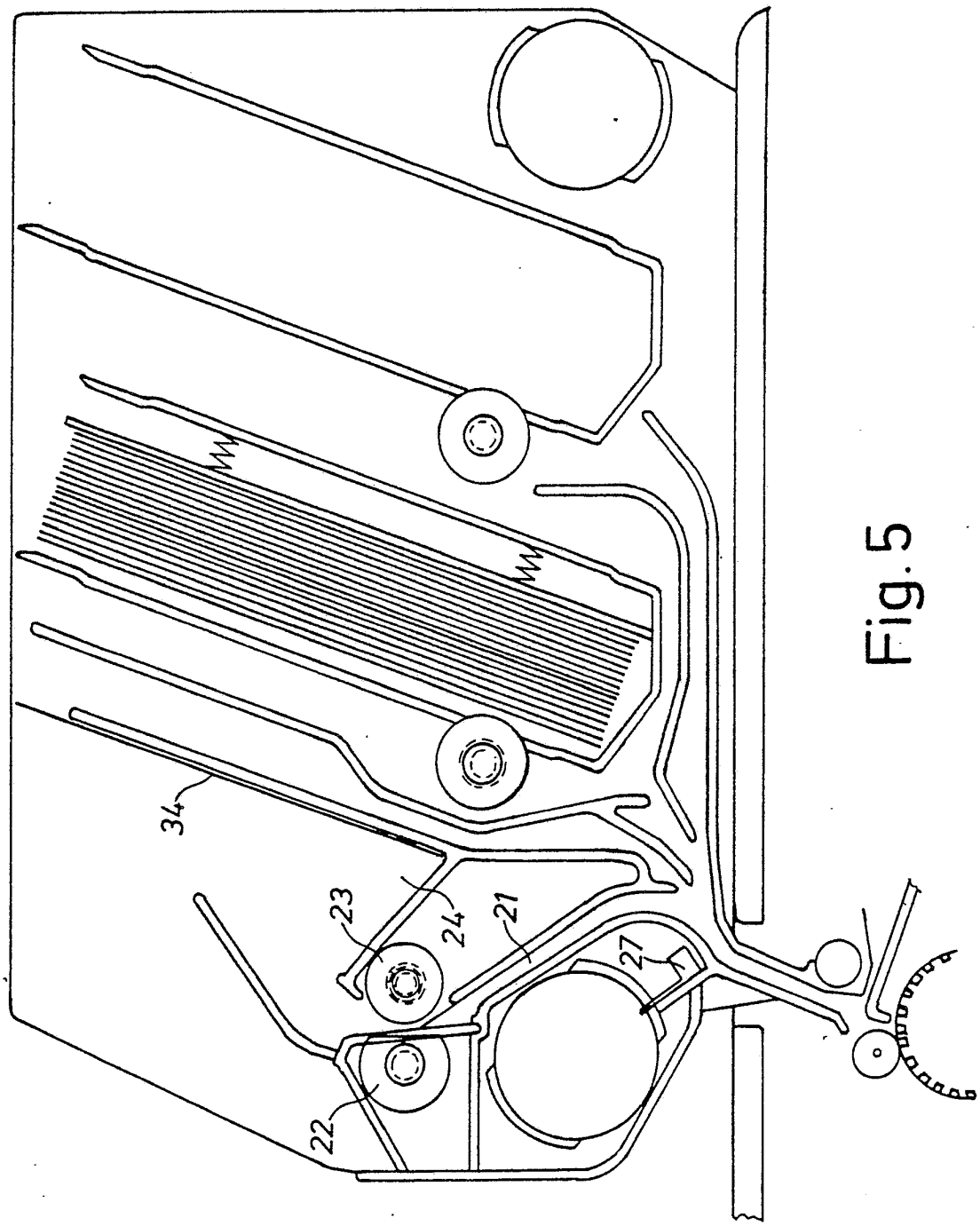

Fig. 5

INTERNATIONAL SEARCH REPORT

International Application No PCT/SE83/00072

I. CLASSIFICATION OF SUBJECT MATTER (if several classification symbols apply, indicate all) [3]

According to International Patent Classification (IPC) or to both National Classification and IPC 3

B 41 J 13/00

II. FIELDS SEARCHED

Minimum Documentation Searched [4]

Classification System	Classification Symbols
IPC 3	B 41 J 13/00, 13/02,03, 13/10, 11/58; B 65 H 3/06, 5/06, 7/02, 7/08, 7/14, 7/18; G 06 K 13/103

Documentation Searched other than Minimum Documentation to the Extent that such Documents are Included in the Fields Searched [5]

SE, NO, DK, FI classes as above

III. DOCUMENTS CONSIDERED TO BE RELEVANT [14]

Category *	Citation of Document, [16] with indication, where appropriate, of the relevant passages [17]	Relevant to Claim No. [18]
X	US, A, 4 268 021 (RUTISHAUSER ET AL) 19 May 1981	1
X	US, A, 3 981 493 (KLAPPENECKER ET AL) 21 September 1976	1
A	US, A, 4 089 402 (HYLAND ET AL) 16 May 1978	

* Special categories of cited documents: [15]

"A" document defining the general state of the art which is not considered to be of particular relevance

"E" earlier document but published on or after the international filing date

"L" document which may throw doubts on priority claim(s) or which is cited to establish the publication date of another citation or other special reason (as specified)

"O" document referring to an oral disclosure, use, exhibition or other means

"P" document published prior to the international filing date but later than the priority date claimed

"T" later document published after the international filing date or priority date and not in conflict with the application but cited to understand the principle or theory underlying the invention

"X" document of particular relevance; the claimed invention cannot be considered novel or cannot be considered to involve an inventive step

"Y" document of particular relevance; the claimed invention cannot be considered to involve an inventive step when the document is combined with one or more other such documents, such combination being obvious to a person skilled in the art.

"&" document member of the same patent family

IV. CERTIFICATION

Date of the Actual Completion of the International Search [2]	Date of Mailing of this International Search Report [2]
1983-06-08	1983 -06- 14
International Searching Authority [1]	Signature of Authorized Officer [20]
Swedish Patent Office	Folke Svensson

Form PCT/ISA/210 (second sheet) (October 1981)

FURTHER INFORMATION CONTINUED FROM THE SECOND SHEET

II Fields Searched (cont)

US Cl 197:130;
400:624, 625, 629, 634-636;
271:3.1, 4, 6, 10, 110, 111, 114, 265

V. ☐ OBSERVATIONS WHERE CERTAIN CLAIMS WERE FOUND UNSEARCHABLE [10]

This international search report has not been established in respect of certain claims under Article 17(2) (a) for the following reasons:

1. ☐ Claim numbers ..... because they relate to subject matter [12] not required to be searched by this Authority, namely:

2. ☐ Claim numbers ....., because they relate to parts of the international application that do not comply with the prescribed requirements to such an extent that no meaningful international search can be carried out [13], specifically:

VI. ☐ OBSERVATIONS WHERE UNITY OF INVENTION IS LACKING [11]

This International Searching Authority found multiple inventions in this international application as follows:

1. ☐ As all required additional search fees were timely paid by the applicant, this international search report covers all searchable claims of the international application.

2. ☐ As only some of the required additional search fees were timely paid by the applicant, this international search report covers only those claims of the international application for which fees were paid, specifically claims:

3. ☐ No required additional search fees were timely paid by the applicant. Consequently, this international search report is restricted to the invention first mentioned in the claims; it is covered by claim numbers:

4. ☐ As all searchable claims could be searched without effort justifying an additional fee, the International Searching Authority did not invite payment of any additional fee.

Remark on Protest

☐ The additional search fees were accompanied by applicant's protest.

☐ No protest accompanied the payment of additional search fees.