Nov. 22, 1960 R. NYDEN 2,961,169

VALVED CLOSURES FOR CONTAINERS

Filed Sept. 9, 1958

FIG. 1

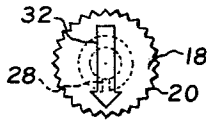

FIG. 2

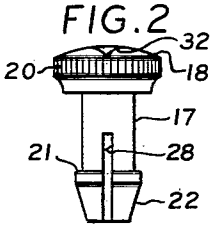

FIG. 5

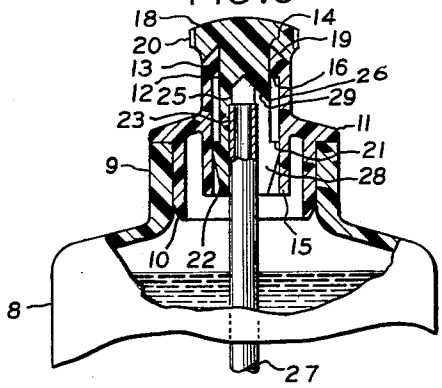

FIG. 4

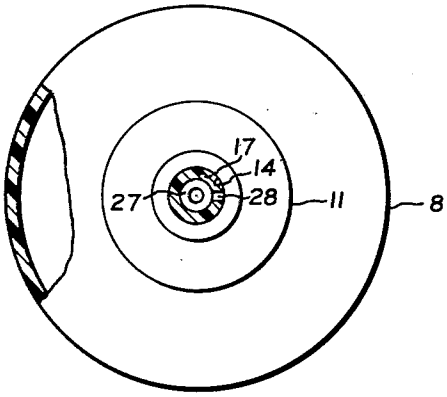

FIG. 7

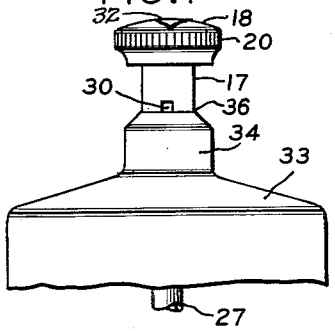

FIG. 3

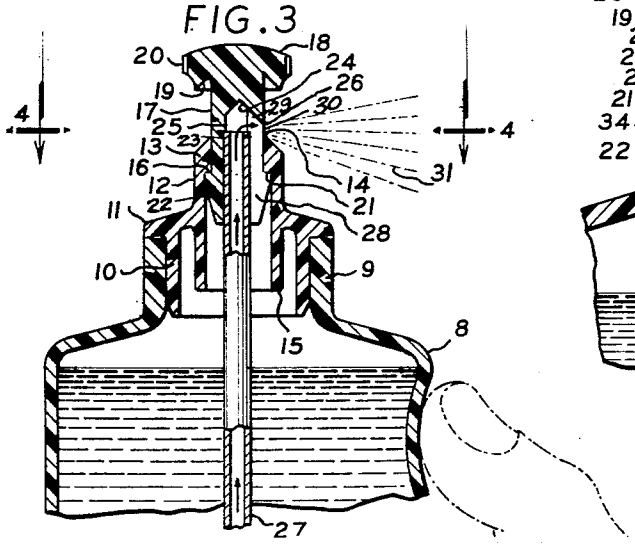

FIG. 6

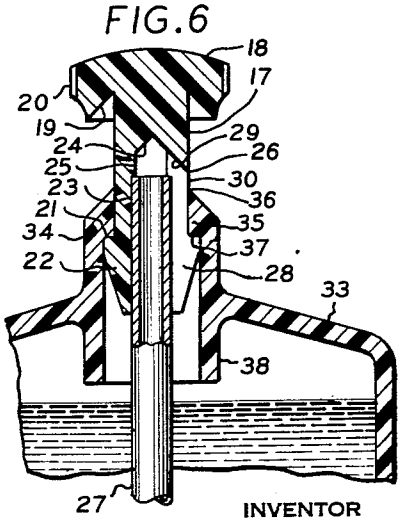

INVENTOR
ROBERT NYDEN

BY, John A. Seifert
ATTORNEY

United States Patent Office 2,961,169
Patented Nov. 22, 1960

2,961,169

VALVED CLOSURES FOR CONTAINERS

Robert Nyden, 109 Castle Ridge Road, Manhasset, N.Y.

Filed Sept. 9, 1958, Ser. No. 759,985

10 Claims. (Cl. 239—327)

This invention relates to a valved closure for containers of resilient material, such as polyethylene for containing liquids, wherein the closure is adjustably mounted in the container whereby in one position of the closure the liquid is sealed in the container and in the other position of the closure the liquid is discharged in a spray from the container by external pressure on the container, such as squeezing the container in the hand of the user.

It is an object of the invention to provide a one-piece valved closure which is inexpensive to manufacture and easy to assemble in the container.

Another object of the invention is to provide a one-piece valved closure which is mountable in an integral part of a container or in a closure cap removably mounted on the container.

It is another object of the invention to provide the valved closure and the container of a material which will form a liquid tight sealing fit between the valved closure and the container.

Another object of the invention is to arrange the container and a discharge orifice of the valved closure so that the spray will be discharged at a right angle to the vertical axis of the container.

A further object of the invention is to arrange the valved closure with an air passage from the container to the liquid receiving portion of said closure to assure the formation of a fine spray.

Other objects and advantages of the invention will be set forth in the detailed description of the invention.

In the drawing accompanying and forming a part of this application:

Figure 1 is a top view of the valved closure;

Figure 2 is an elevational view of the valved closure showing a slot therein;

Figure 3 is an elevational view in section of the upper portion of a container closed by a closure cap and the valved closure mounted in said closure cap and actuated to open position;

Figure 4 is a sectional view taken on the line 4—4 of Figure 3 looking in the direction of the arrows;

Figure 5 is a view similar to Figure 3 showing the valved closure in closed position;

Figure 6 is a sectional view, on an enlarged scale, of the upper portion of a container arranged with an integral discharge member and showing the valved closure in open position; and

Figure 7 is an elevational view of the structure shown in Figure 6 and looking at the right hand side of Figure 6.

In Figures 3, 4 and 5, the invention is shown in combination with a container 8 of resilient material, such as polyethylene, having an annular neck 9 extending from the exterior of the top wall of the container. The neck 9 of the container is closed by a closure cap of resilient material, such as polyethylene, comprising a skirt portion 10 having a liquid-tight sliding fit in the neck 9 and a top wall arranged with an annular flange to abut the top edge of the neck 9, as shown at 11. The closure cap is

arranged with a tubular discharge member in the top wall thereof comprising a first portion 12 extending from the exterior of said top wall and arranged with an inturned lip 13 having a beveled outer face forming a sharp edge with the opening in the lip, as shown at 14. A second portion 15 of the discharge member is extended from the interior of the top wall of the closure cap into the closure cap in spaced relation to the skirt portion 10. The second portion 15 is shown as terminating within the skirt portion 10 but it may extend beyond said skirt portion. The under face of the inturned lip 13 extends in a substantially horizontal plane, as indicated at 16 in Figure 5.

The opening in the inturned lip 13 is closed by a valved closure of resilient material, such as polyethylene, comprising a stem portion 17 of uniform diameter throughout its length having a liquid-tight sliding fit in the inturned lip 13 and a knob 18 integral with one end of the stem portion to abut the inturned lip and limit the downward sliding movement of the stem portion in the tubular discharge member 12–16. The under face of the knob 18 is beveled corresponding to the beveled outer face of the inturned lip 13, as shown at 19, to seal the lip when the stem 17 is in its innermost position in the discharge member 12–16. The periphery of the knob 18 is serrated, as at 20, to facilitate gripping the knob and actuating the valved closure. The opposite end of the stem 17 is arranged with a horizontal shoulder 21 formed by an integral inverted truncated conical portion 22 having a sliding fit in the discharge member 12–16 at the base of said truncated portion.

The valved closure is arranged to discharge the contents of the container 8 in a fine spray at a right angle to the inturned lip 13 by providing an axial recess 23 in the stem portion 17 and in the truncated conical portion 22 opening at the truncated end of said portion 22 and terminating in an intermediate section of the stem portion 17. The terminating end of the recess 23 is of conical shape, as shown at 24, and a section of the recess below said conical end 24 is of less diameter than the major portion of said recess, as shown at 25. One end portion of a discharge tube 27 is inserted into the major portion of the recess 23 with said end abutting the shoulder formed between the major portion of the recess 23 and the reduced section 25 so that the tube is spaced from the conical end 24 of the recess and forms a mixing chamber. As usual in this type of container, the opposite end of the tube 27 is extended to the bottom of the container. A slot 28 is provided in the stem portion 17 and in the truncated conical portion 22 to extend longitudinally of and to the recess 23 and the reduced section 25. The end wall of the slot 28 terminating in the stem portion 17 extends in line with the angle of inclination of the conical end 24, as shown at 29, and forms with the exterior of the stem portion a sharp edge 26. The recess 23 including the reduced section 25 and the conical end 24 and the slot 28 extend above the shoulder 21 a distance greater than the thickness of the inturned lip 13, so that in the outermost position of the valved closure, the end wall 29 and the sharp edge 26 of the slot 28 will be positioned above the sharp edge 14 and provide a discharge orifice, as shown at 30 in Figure 3. The conical end 24 and the end wall 29 of the slot 28 are spaced from the knob 18 so that said conical end and the end wall of the slot are below the lip 13 in the innermost position of the valved closure and the discharge member is sealed by the lip 13 and the stem portion, as shown in Figure 5.

In operation, the valved closure 17–29 is pulled upwardly from the discharge member 12–16 until said movement is stopped by the shoulder 21 abutting the inner face 16 of the lip 13. Then the contents of the container 8 is placed under pressure by squeezing the container, as

indicated by a thumb in Figure 3. The pressure will force the contents up the tube **27** and force the air in the container above the contents up through the slot **28** to intermingle or mix with the contents of the container in the mixing chamber formed by the inner end of the tube **27**, the reduced section **25**, the conical end **24** and the slot end **29** and form a fine spray which is discharged in a horizontal plane or at a right angle to the vertical axis of the container, as indicated at **31** in Figure 3, due to the sharp edges **14** and **26**. The sharp edge **14** will also prevent an accumulation of the contents on the exterior of the discharge member. To facilitate discharging the spray in the desired direction, the top of the knob **18** is arranged with an index, such as an arrow, as indicated at **32** in Figures 1 and 2. The point of the arrow is in vertical alignment with the slot **28**, as shown in Figure 2. The knob **18** is turned in the desired direction of discharge of the spray.

To close the discharge orifice **30** and seal the container **8**, the valved closure is pushed down until said movement is arrested by the beveled under face **19** of the knob **18** abutting the beveled outer face of the lip **13**.

In Figures 6 and 7, there is shown another method of applying the valved closure to a different type of container wherein the usual closure cap is omitted. Said container comprises a body **33** of resilient material, such as polyethylene, having the tubular discharge member embodied in the top wall of the container and consisting of a first portion **34** integral with and extending from the exterior of the container top wall and arranged with an inturned lip **35** at the outer end of said first portion provided with a beveled outer face arranged with a sharp edge **36** and a horizontal inner face **37**. A second portion **38** of the discharge member is extended from the interior of the container top wall into the container. The tubular discharge member **33–38** is of the same structure as the tubular discharge member **12–16** shown in Figures 3 to 5, inclusive, except that in Figures 3 to 5, inclusive, said discharge member is integral with a container closure cap, and in Figures 6 and 7, the discharge member is integral with the container top wall.

In Figures 6 and 7, the valved closure is the same as the valved closure shown in Figures 1 to 5, inclusive, and cooperates with the tubular discharge member **34–38** in the same manner as it does with the tubular discharge member **12–16**. Like reference numerals denote like parts of the valved closure in all of the figures.

The valved closure **17–29** is readily assembled in the discharge member **12–16** or **34–38** by first inserting the tube **27** in the recess **23** and then passing the tube **27** through the opening in the inturned lip **13** or **35**. The shape of the truncated portion **22** and resiliency of said truncated portion and the inturned lip **13** or **35** facilitate the forcing of the shoulder **21** past the inturned lip **13** or **35**. The truncated portion **22** will also prevent damaging the sharp edge **14** or **36**.

Having thus described my invention, I claim:

1. In combination with a container of resilient material having a tubular discharge member at one end, said discharge member having a first portion extended from the exterior of the container and arranged with an annular inturned lip and a second portion extended into the container, a valved closure comprising a stem portion having a sliding liquid-tight fit in the inturned lip, a knob at one end of the stem portion to abut the exterior of the inturned lip and limit the inward sliding movement of the closure in the discharge member and a shoulder at the opposite end of the stem portion slidable in the discharge member below the inturned lip and adapted to abut the inner face of said inturned lip and limit the outward sliding movement of the closure in the discharge member, the closure being arranged with an axial recess opening at the end of the closure below the shoulder and terminating in the stem portion and a slot extending longitudinally of the recess in the wall of the closure, and a tube mounted at one end in the recess with said end of the tube spaced from the ends of the recess and the slot in the stem portion and the opposite end of the tube positioned at the bottom of the container, the recess and the slot being extended above the shoulder a distance greater than the thickness of the lip whereby the outermost movement of the closure positions an end portion of the slot above the lip to permit the discharge of the contents of the container from the tube into the recess through the slot above the lip into the atmosphere mixed with air from the discharge member to form a spray by exerting pressure on the container and the innermost movement of the closure positioning the slot below the lip and shutting-off the discharge of the contents into the atmosphere.

2. The combination as claimed in claim 1, wherein the outer face of the lip and the under face of the knob are correspondingly beveled to form a seal in the innermost position of the closure.

3. The combination as claimed in claim 1, wherein the terminating end of the recess is of conical shape and the adjoining end wall of the slot extends in line with the inclination of said conical recess end, whereby a fine spray is produced.

4. The combination as claimed in claim 1, wherein the outer face of the lip is beveled and the terminating end of the recess is of conical shape and the end wall of the slot adjoining the terminating end of the recess extends in line with the inclination of said conical recess end, whereby a fine spray is produced.

5. The combination as claimed in claim 1, wherein the outer face of the lip is beveled and forms a sharp edge with the opening in the lip, and the end wall of the slot forms a sharp edge with the exterior of the stem portion, said sharp edges directing the spray in a plane at a right angle to the vertical axis of the container.

6. The combination as claimed in claim 1, wherein the outer face of the lip is beveled and forms a sharp edge with the opening in the lip to prevent an accumulation of the contents on the exterior of the discharge member.

7. The combination as claimed in claim 1, wherein the end portion of the closure below the shoulder is of inverted truncated conical shape to facilitate assembling of the closure in the discharge member.

8. The combination as claimed in claim 1, wherein the discharge member is integral with the top wall of the container.

9. The combination as claimed in claim 1, wherein the discharge member is integral with the top wall of a closure cap having the skirt portion spaced from the second portion of the discharge member and releasably connected to the container.

10. The combination as claimed in claim 1, wherein the knob is arranged with an index indicating the position of the slot and the direction of discharge of the spray.

References Cited in the file of this patent

UNITED STATES PATENTS

358,219	Peter	Feb. 22, 1887
706,710	Allen	Aug. 12, 1902
1,393,864	Weitz	Oct. 18, 1921
1,548,241	Anderson	Aug. 4, 1925
2,859,932	Mackal	Nov. 11, 1958

FOREIGN PATENTS

486,429	Italy	Nov. 10, 1953