Feb. 24, 1931. D. S. KEEN 1,794,179

CLAMP

Filed Feb. 15, 1928

Fig. 1

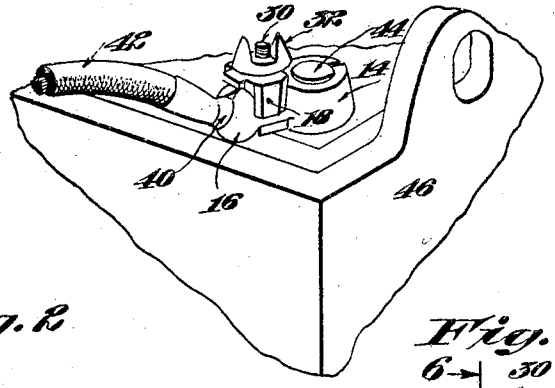

Fig. 2

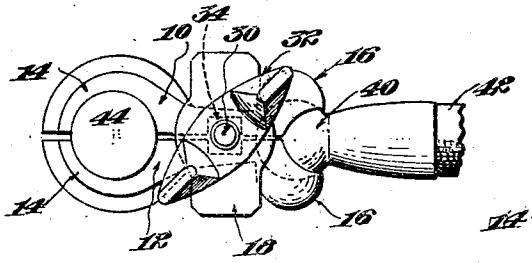

Fig. 3

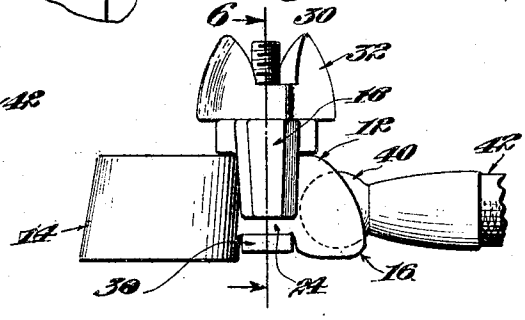

Fig. 4

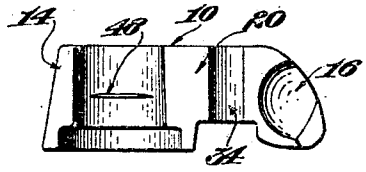

Fig. 6

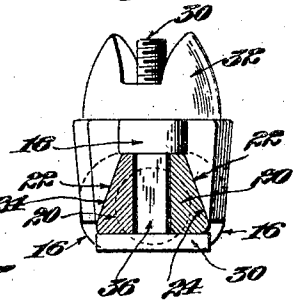

Fig. 5

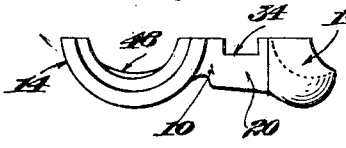

Fig. 7

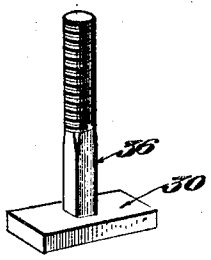

Inventor
Delbert S. Keen
by Francis P. Dehn
his Atty.

Patented Feb. 24, 1931 1,794,179

UNITED STATES PATENT OFFICE

DELBERT SAVANTIST KEEN, OF MALDEN, MASSACHUSETTS

CLAMP

Application filed February 15, 1928. Serial No. 254,539.

This invention relates to a clamp and although more particularly designed for clamping line terminals to storage battery terminals, it is yet adapted for various other uses.

The objects of the invention are to provide a clamp which is adapted for connecting terminals of different shapes and sizes, which is easily applied and disconnected, which can be taken up when necessary to compensate for wear, which permits of relative movement of the parts clamped, and which is simple and efficient in construction and yet of a low cost.

My invention contemplates a clamp having two co-operating members with their ends formed to suit the shape of the members to be clamped with means for drawing the two members together in clamping action and for locking them when set up. The members are preferably of like construction and the clamping action is effected by forcing the two members together to grip between their ends the parts to be connected by clamping. Although various means may be employed for this purpose, the preferred comprises a yoke having inclined or wedging surfaces for engagement with complemental wedging surfaces on the clamping members and screw means for drawing the clamping members into the yoke to bring them together and thereby effect the clamping.

In the drawings illustrating the preferred form of my invention, Figure 1 is a view in perspective of the upper corner portion of a storage battery showing a clamp constructed in accordance with my invention employed for clamping together a line terminal and a storage battery terminal; Fig. 2 is a top plan view showing the clamp with two terminals clamped together thereby; Fig. 3 is a side elevation of the same; Fig. 4 is a side elevation of one of the clamping members looking toward the inner face; Fig. 5 is a bottom plan view of the same looking upwardly in Fig. 4; Fig. 6 is a cross-sectional view on line 6—6 in Fig. 3 showing the yoke, locking screw and nut in elevation and Fig. 7 is a view in perspective of the locking screw for locking the clamping members together to effect a clamping action.

Referring to the drawings, 10 and 12 designate a pair of clamping members of like construction which together make up the clamp. The ends of the clamping members may be variously formed dependent upon the use to be made of the clamp but when employed in connection with a storage battery, one end 14 of each member is semi-cylindrical to conform to the shape of the battery terminal post and the other end 16 is a half ball socket to receive the ball end of the line terminal.

For drawing the two clamping members together, I provide a yoke 18 adapted to fit about the intermediate or neck portions 20 of the members 10 and 12. The inner faces 22 of the yoke diverge in an outward direction and form wedging surfaces which are complemental to wedging surfaces 24 formed on the outer sides of the necks or intermediate portions 20 of the two clamping members. The forcing of the two clamping members into the yoke wedges them together to bring about the clamping action of their two ends. Any suitable means may be employed to this end and one form of such means is shown comprising a T-headed screw 30 and a butterfly nut 32. The screw shank is arranged between the clamping members with its head lying transverse to the longitudinal axes of the said members and supporting them within the yoke 18 and the threaded end of the screw projects loosely up through a hole in the yoke to receive the nut 32. Each of the clamping members is provided with a recess 34 on its inner face to permit them to be drawn together without binding upon the shank of the screw 30. To prevent turning of the screw during the manipulation of the nut, that portion 36 of its shank near the head may be squared to fit loosely the recesses 34 in the two clamping members and the necks of the said two members may be reduced vertically so that the head is locked in a transverse position between the two ends of the members (Fig. 3).

To illustrate the use of my invention, Figure 1 shows the clamp hereinbefore described utilized for connecting the ball terminal 40 on the line conductor 42 to the post terminal 44 of a storage battery 46 of ordinary and well

known construction. The semi-cylindrical ends 14 of the clamping members 10 and 12 grip between them the post terminal 44 and the ball socket ends 16 enclose the ball terminal 40. To insure a tight grip upon the post terminal, the inner surfaces of the ends 14 of the clamping members are provided with fins 48 for biting into the post when said members are clamped thereto.

The application and removal of clamps of my invention to storage batteries is accomplished with a minimum expenditure of time and effort and is very simple. The two clamping members, in applying the clamp, may be held in one hand with the T-screw arranged in position with its shank upright, the ball terminal is then with the other hand inserted between the proper ends of the members and the yoke dropped over the neck portions of the members and the nut threaded into the screw, after which the cylindrical end of the clamp may be dropped over the post terminal, the nut tightened and the operation is complete. To remove the clamp from the terminals, the nut is unscrewed, the yoke removed and the two clamping members fall apart. When the clamp is used on storage batteries, however, the conductor may be disconnected from the battery by merely loosening the butterfly nut sufficiently to permit one end of the clamp to be removed from the battery post terminal which as a general rule will not loosen up the clamping members sufficiently to release the ball terminal from the other end of the clamp and it may be left hanging on the end of the line conductor until the latter is reconnected to the post terminal.

One of the principal advantages of a clamp of this construction is the ease with which it may be disconnected from the battery terminal and this advantage is especially emphasized in connection with batteries used on automobiles. In such cases, it has been observed that great difficulty is commonly experienced in disconnecting line conductors from storage batteries because of the accumulation of deposits, corrosive or otherwise, on the battery terminals, but with my clamp such conditions are instantly overcome by removing the yoke and separating the clamping members from the battery terminal.

It is to be noted that by varying the shapes of the ends of the clamping members, the clamp may be adapted to a wide variety of uses and it is to be understood that my invention is not to be limited to the particular form herein shown and described since it may be embodied in various other forms all within the purview of the following claims.

What I claim is:

1. A clamp for connecting electrically a post terminal and a ball terminal comprising two clamping members, each end of each of said members being formed for cooperating with the corresponding end of the other of said members to clamp one of said terminals and each of said members being provided with a wedging surface, a yoke member mounted on said two clamping members and having interior wedging surfaces in engagement with the wedging surfaces of said members, a T-shaped screw having its head arranged transversely of the bottom face of said members and its shank extending upwardly through said yoke and a thumb nut threaded on the upper end of said shank and easily accessible for drawing said members into said yoke to effect a clamping action.

2. A clamp having, in combination, two members of like construction having their two ends formed for co-operative clamping action, each member having one end semi-cylindrical to partially enclose a terminal post and its other end of half ball socket form, and having an intermediate outer oblique wedging surface, said semi-cylindrical end being provided with an inner fin for locking said end on said terminal post, a wedging yoke for engaging the wedging surfaces on said two members and a T-shaped screw and thumb nut for drawing said two members into said yoke to effect a clamping action.

3. A battery connector clamp having, in combination, two members of like construction having their two ends formed for co-operative clamping action, each member having one end semi-cylindrical to partially enclose a battery terminal post and its other end of half ball socket form for partially enclosing the end of a line conductor and having its intermediate portion provided with an outer oblique wedging surface, a wedging yoke mounted on said members and having oblique inner surfaces for engaging said wedging surfaces, a T-shaped screw having its head in transverse engagement with the bottom faces of said two members and its shank extending upwardly through said yoke and a thumb nut threaded on the upper end of said shank for drawing said two members into said yoke to effect a clamping action, said thumb nut being at all times easily accessible to permit manipulation thereof.

In witness whereof, I hereunto set my hand this fourteenth day of February, 1928.

DELBERT S. KEEN.