May 3, 1949. C. R. COX 2,469,328

DRY AIR PUMP

Filed July 20, 1944 2 Sheets-Sheet 1

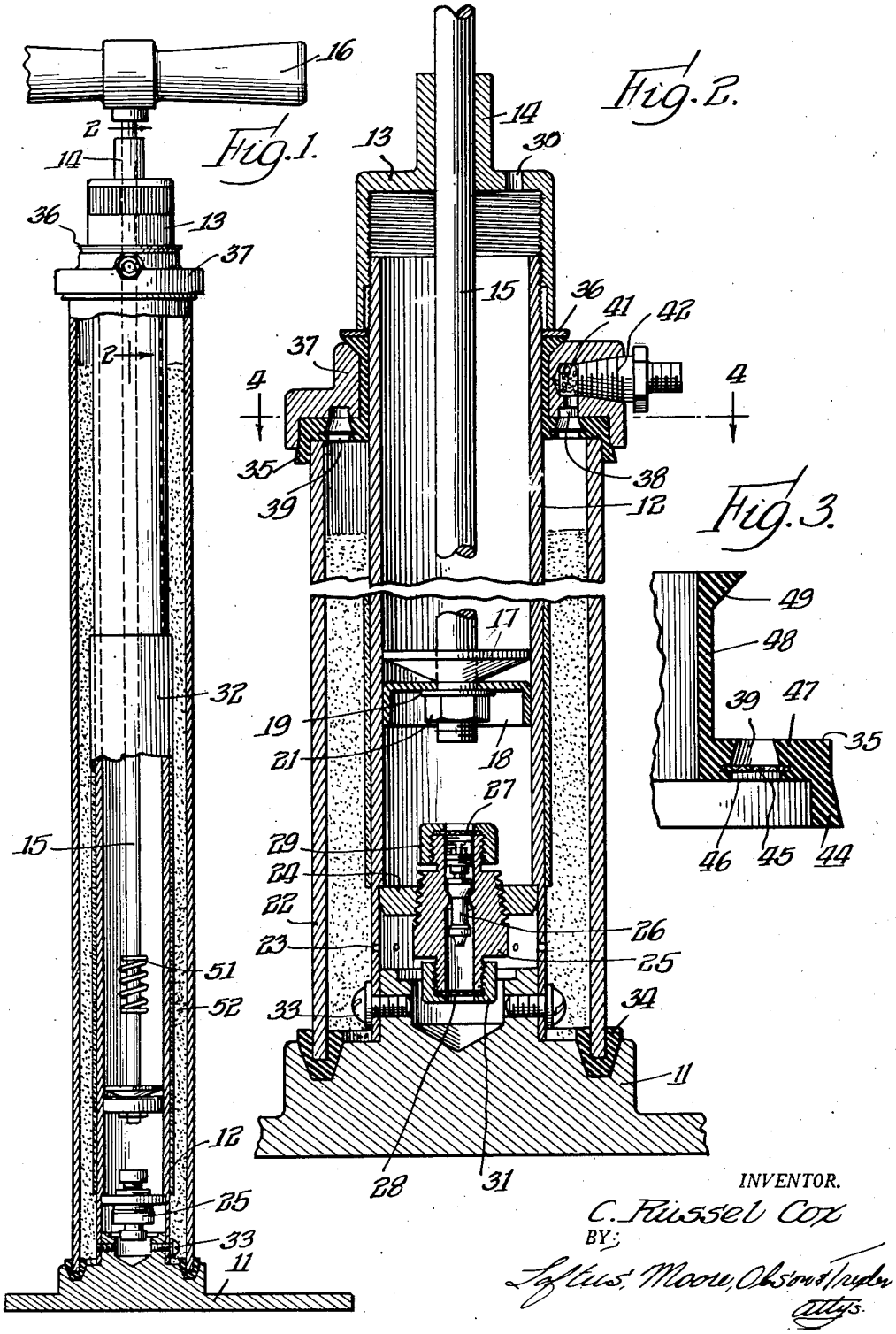

INVENTOR.

C. Russel Cox

BY:

Lyon, Moore, Osborn & Taylor

Attys.

May 3, 1949. C. R. COX 2,469,328

DRY AIR PUMP

Filed July 20, 1944 2 Sheets-Sheet 2

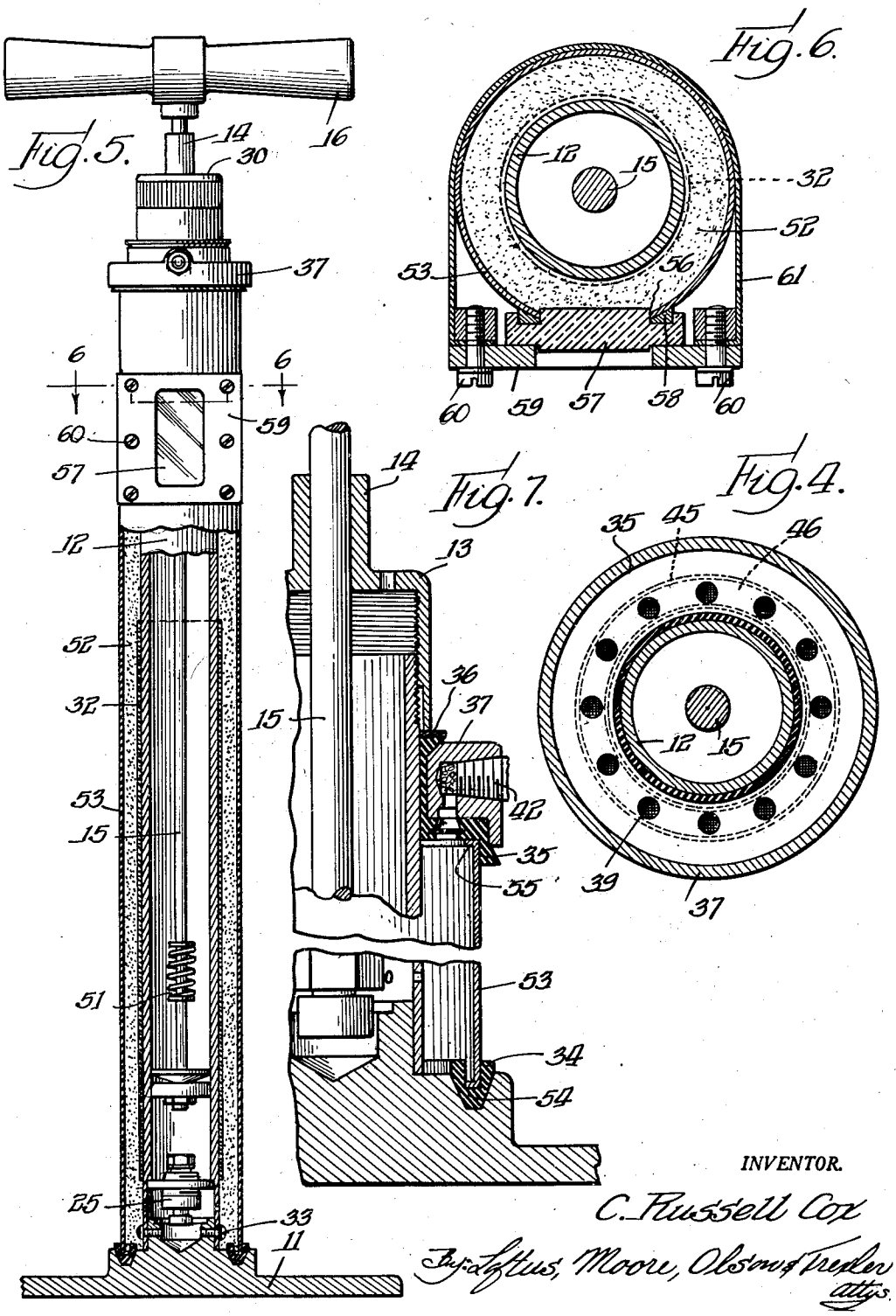

INVENTOR.

C. Russell Cox

By: Loftus, Moore, Olson & Trexler
attys.

Patented May 3, 1949

2,469,328

UNITED STATES PATENT OFFICE

2,469,328

DRY-AIR PUMP

Claude Russell Cox, Chicago, Ill., assignor to Andrew Corporation, Chicago, Ill., a corporation of Illinois

Application July 20, 1944, Serial No. 545,874

2 Claims. (Cl. 183—4)

1

The present invention relates to dry air pumps and more particularly to a hand operated device for supplying dehydrated air under pressure.

Coaxial cables and transmission lines are widely used in the transmission of the higher radio frequencies, particularly for connecting transmitters or receivers to antennas. In such installations it is desirable to maintain the dielectric constant within the cable or transmission line constant so that the impedance of the line will not vary and there will be no variation or loss. Heretofore it has been customary to fill such cables and transmission lines with a gas such as nitrogen. Generally nitrogen has been supplied to a coaxial cable under a certain amount of pressure so as to keep the interior of the cable or transmission line filled with a medium having a constant or known characteristic. More recently it has been difficult to obtain metal cylinders or containers for nitrogen, and in combat areas the necessity of providing such metal cylinders with gas is difficult and undesirable. Accordingly in order to obviate the need of filling coaxial cables and transmission lines with gas, dehydrated air may be used, and such dehydrated air may be supplied by a dry air pump constructed in accordance with the present invention. Such pump is provided with a dehydrating compartment containing a regenerative adsorbent which preferably is highly stable both chemically and physically and is non-deliquescent. A suitable indicator comprising a chemical compound is mixed with the dehydrating agent or adsorbent to show when the agent has reached its capacity for absorbing moisture. Thereupon the agent or compound may be replaced, or regenerated, by heating at a certain temperature for a predetermined amount of time.

In accordance with the present invention there is provided a pump for compressing air from the atmosphere and forcing such compressed air through the container having therein an adsorbent compound. Such device preferably is constructed so as to be readily portable, rugged, and easy to use. Where the device is apt to be subject to shock, as is the case where the device is to be used in combat areas, certain modifications in the structure are provided so as to obtain reliable operation at all times.

It, therefore, is an object of the present invention to provide an improved dry air pump for supplying dehydrated air.

It is another object of the present invention to provide a unitary apparatus for compressing and dehydrating air.

2

Still another object of the present invention is to provide an improved unitary apparatus or device having a compression chamber and a dehydrating chamber provided with an arrangement whereby a relative indication may be obtained as to the ability or capacity remaining for the dehydration of air.

Other and further objects of the present invention subsequently will become apparent by reference to the following description taken in connection with the accompanying drawing wherein

Figure 1 is a view of an air pump and dehydrating apparatus embodying the present invention shown partially in cross section;

Figure 2 is an enlarged view of the upper and lower portions of the apparatus shown in Figure 1;

Figure 3 is an enlarged cross sectional view of one portion of the apparatus shown in Figure 2;

Figure 4 is a cross sectional view as seen in the direction of the arrows along the line 4—4 of Figure 2;

Figure 5 shows another embodiment of the present invention partially in cross section particularly suited for service where the device is subject to shock;

Figure 6 is a cross sectional view of the apparatus shown in Figure 5 as seen in the direction of the arrows along the line 6—6; and

Figure 7 is a partial cross sectional view of the upper and lower extremities of the device shown in Figure 5.

Referring more particularly to Figures 1 and 2 of the drawing there is shown a dry air pump embodying the present invention comprising a base 11 to which is rigidly secured an inner cylinder 12 terminating at the other end in a cap member 13. The cap member 13 is provided with a sleeve bearing portion 14 which serves to guide the piston rod 15 which is secured at its upper extremity to an operating handle 16. At the other end of the piston rod 15 there is mounted a conical cell washer or guide member 17. Immediately beneath the guiding member 17 is a compression cup 18 which more commonly is made of leather. The lower extremity of the piston rod 15 is threaded and the guide washer 17 and the compression cup 18 are retained in position by a washer 19 and a nut 21. An outer chamber is formed by an outer coaxial cylinder member 22 resiliently mounted between the base 11 and the upper collar member 13 secured to the inner cylindrical member 12. The lower portions of the inner chamber formed by the cylinder 12

and the outer chamber formed by the cylinder 22 are connected by suitable apertures 23. The lower portion of the cylinder 12 is separated by a partition 24 from the bottom of the cylinder so as to serve as a chamber wherein compressed air may be forced for distribution into the outer chamber through the apertures 23. The wall 24 has a centrally threaded aperture supporting a valve assembly 25 having therein a central bore provided with a check valve 26 which may be of the type commonly used for pneumatic vehicle tires. The valve 26 at each end is protected by a plurality of screens 27 and 28. The screens 27 and 28 arranged at opposite ends of the passage containing the check valve 26 are supported in suitable threaded retaining collars 29 and 31 respectively. The upper collar 13 mounted at the upper threaded extremity of the inner cylindner 12 is provided with an opening 30 so that air from the atmosphere may enter the cylindner 12. When the piston rod 15 is moved downwardly air is compressed by the action of the cup 18 and forced through the screen 27 past the check valve 26 and through the screen 28. The air thereupon is distributed through the apertures 23 in the lower extremity of the cylinder 12. Since the action of the compression of air by the piston structure supported at the end of the piston rod 15 generates heat, the exterior of the cylinder 12 for a considerable portion of its length is provided with a heat insulating covering 32. The lower extremity of the cylinder 12 may be secured to the base 11 by any suitable securing means such as the screws 33.

The outer cylinder 22 in the present embodiment preferably is formed of a transparent substance such as one of the transparent plastic materials so that the condition of the material contained between the inner cylinder 12 and the outer cylinder 22 is susceptible of ready observation. The lower extremity of the cylinder 22 is resiliently mounted in an annular gasket 34 supported in a generally V-shaped groove formed in the base 11. The upper extremity of the cuter cylinder 22 bears against a resilient packing member 35 which extends from the circumference of the outer cylinder 22 to the outside of the inner cylinder 12 and thence upwardly along the cylinder 12 to a washer 36 positioned immediately beneath the lower extremity of the collar 13 which threadedly engages the upper extremity of the inner cylinder 12. The resilient member 36 is positioned within a collar 37 having a cylindrical bore portion for receiving the cylindrical portion of the resilient gasket member 35 which extends longitudinally along the outside of the inner cylinder 12. The collar 37 is provided with an annular groove 38 positioned above a plurality of apertures 39 formed in a portion of the gasket 35 so as to communicate with the chamber formed between the inner and outer cylinders 12 and 22 respectively. The collar 37 has a passageway 41 communicating with the annular ring 38 and this passageway may include filter material such as glass wool. The passageway 41 communicates with an air outlet member 42 having an external construction similar to the valve member 25. Suitable coupling means such as a hose may be used to interconnect the outlet member 42 with fittings provided on the coaxial line. During the transportation the air outlet member 42 may be protected by a suitable cap.

By referring more particularly to Figures 3 and 4 the details of construction of the resilient gasket 35 will become apparent. The gasket 35 has a depending flange portion 44 which immediately surrounds the outside of the outer cylinder 22. The apertures 39 extend to an annular filter member or screen 45 retained in position at the top of an annular recess 46 formed in the gasket 35. Immediately above the horizontal portion 47 of the gasket 35 there is a cylinder portion 48 which extends along the outside of the inner cylinder 12 to a point immediately beneath the retaining washer 36 shown in Figure 2. Immediately beneath the retaining washer 36, the wall 48 is enlarged somewhat to have a frustoconical configuration 49 which cooperates with a similar shaped portion formed at the top of the collar 37.

Referring again to Figures 1 and 2 it will be seen that a coil spring 51 may be positioned about the piston rod 15 so as to cushion the stopping of the piston rod when the rod is moved upwardly to its uppermost limit. A space between the inner cylinder 12 and the outer cylinder 22 is substantially completely filled with an adsorbent material 52 which preferably is of the regenerative type which is non-deliquescent, such as the chemical silicon dioxide. A pound of this material will remove practically all the moisture from four hundred cubic feet of free air at a temperature of fifty to seventy degrees Fahrenheit and at a relative humidity of sixty per cent. In hot humid climates about two hundred cubic feet of free air may be dehydrated by the same amount of material. When the material has become saturated through use it may be replaced with fresh material or the material may be regenerated by heating in an open pan in an oven at a temperature of from three hundred to three hundred fifty degrees Fahrenheit. In order that a visual indication may be obtained from the observation of the material through the transparent walls of the outer cylinder 22 a cobalt indicator is introduced in a compound 52. For example a cobaltous chloride has a blue color when dehydrated and a red color when saturated. Thus by mere observation of the color of the material which has a blue color when the silicon dioxide is dehydrated, a reddish color will appear at the time when the adsorbent material 52 approaches saturation. Subsequent heating of the material again changes the color back to its original color.

Where the apparatus is to be used under service conditions such as encountered in the field or in combat areas a somewhat modified structure is provided so that the apparatus may readily withstand impact and shock. Such modification is illustrated in Figures 5, 6, and 7 wherein many of the parts are identical to parts shown in Figures 1 to 4 inclusive and hence have been given similar reference characters. In the apparatus shown in Figures 5, 6, and 7 the outer cylindrical casing 53 is formed of metal having at the lowermost end an inwardly turned flange 54 to fit within the groove in the annular resilient gasket 34, and in another inwardly turned portion 55 at the other end of the cylindrical member 53 to bear against the resilient gasket member 35. The inner cylinder, the base and the top structure assembly corresponds to the apparatus shown in the previous figures. Adjacent the upper portion of the outer cylinder 53 a suitable aperture 56 is provided for receiving a transparent plastic window member 57. Interposed

between the edges of the aperture **56** and the transparent window member **57** is a resilient gasket **58**. The window member **57** is retained in position by an apertured plate **59** which is secured by suitable bolts **60** to the ends of a strip **61** which extends around a portion of the circumference of the outer cylinder wall **53**. The window **57**, therefore, permits observation of the condition of the adsorbent material **52** contained between the inner cylinder **12** and the outer cylinder **53**. The various parts of the pump of the type shown in Figures 5, 6, and 7 are made of such materials and given such finishes as to protect the apparatus against effect of climatic conditions encountered in various service areas, more particularly the hot humid climates.

While for the purpose of illustrating and describing the present invention certain specific embodiments have been shown in the drawing, it is to be understood that the invention is not to be limited thereby since obviously such variations and modifications may be made as are commensurate with the spirit and scope of the invention as defined in the appended claims.

This invention is hereby claimed as follows:

1. In a dry air pump having two vertical concentric cylinders in communication with each other at the lower end and a piston and piston rod for the inner cylinder, the combination comprising a resilient gasket extending from the outer cylinder to the inner cylinder, a collar surrounding the upper portion of said gasket adjacent said inner cylinder and extending to the exterior of said outer cylinder, said collar having an air outlet and an annular passage, said gasket having apertures communicating with said passage and said outer cylinder, a mesh member supported by said gasket and interposed between said apertures and said outer cylinder, a cap and bearing member for said inner cylinder and said piston rod, said cap being threadedly secured to said inner cylinder and arranged to retain in position said collar and said resilient gasket.

2. A dry air pump having an inlet and an outlet, two vertical concentric cylinders, said inner cylinder being connected to said inlet, base

and top supporting structures for said cylinders, said inner cylinder being secured rigidly to both said supporting structures, means within said inner cylinder for compressing air, air passage means including a valve interconnecting said inner and outer cyliders, a resilient gasket extending from the outer cylinder to the inner cylinder, a collar surrounding the upper portion of said gasket adjacent said inner cylinder, and extending to the exterior of said outer cylinder, said collar having an air outlet and an annular passage, said gasket having apertures communicating with said annular passage and said outer cylinder, a mesh member supported by said gasket and interposed between said apertures and said outer cylinder, dehydrating means substantially filling the space between said inner and outer cylinders said dehydrating means comprising a non-deliquescent adsorption material, heat insulation means arranged about the lower portion of said cylinder, and resilient means interconnecting said outer cylinder with said base supporting structure.

CLAUDE RUSSELL COX.

REFERENCES CITED

The following references are of record in the file of this patent:

UNITED STATES PATENTS

Number	Name	Date
233,492	Field	Oct. 19, 1880
275,387	Hunter	Apr. 10, 1883
322,073	Snyder	July 14, 1885
750,154	Boekel	Jan. 19, 1904
780,682	Posch	Jan. 24, 1905
1,307,039	Casler	June 17, 1919
1,831,756	Spira	Nov. 10, 1931
2,084,294	Cooper	June 15, 1937
2,315,049	Cronstedt	Mar. 30, 1943
2,322,603	Thumim et al.	June 22, 1943
2,325,657	Burkness	Aug. 3, 1943

FOREIGN PATENTS

Number	Country	Date
393,094	Great Britain	June 1, 1933
754,333	France	Nov. 6, 1933