(No Model.) 2 Sheets—Sheet 1.

D. J. REYNOLDS.

ACETYLENE GAS GENERATOR.

No. 590,441. Patented Sept. 21, 1897.

Fig. 1.

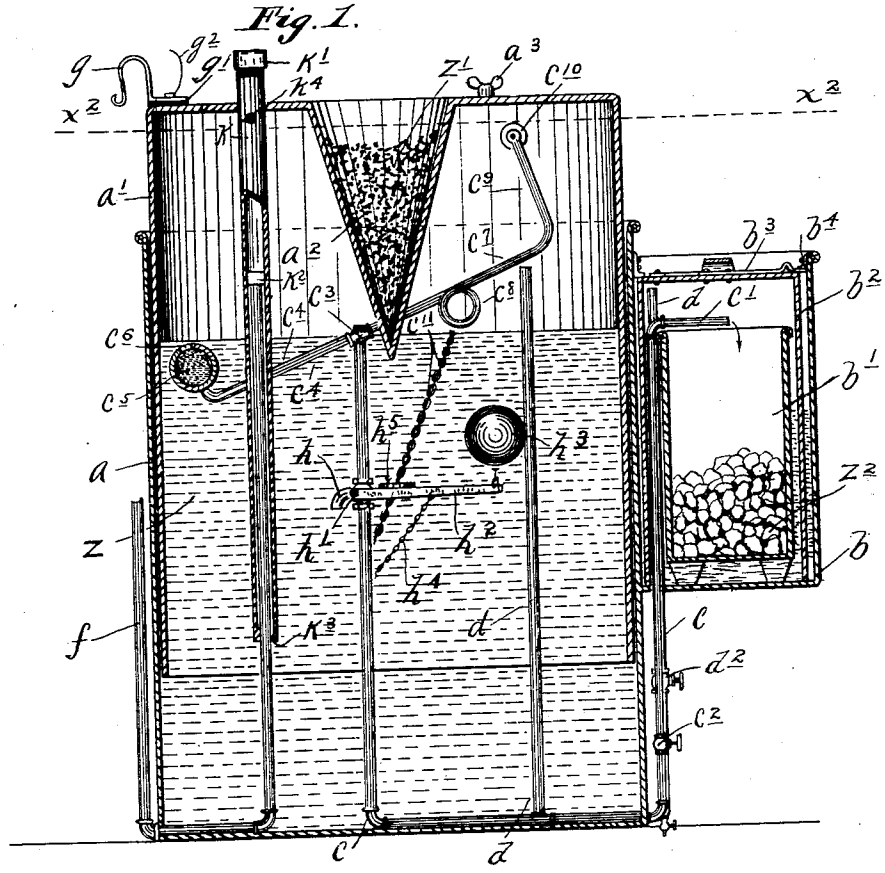

Fig. 2.

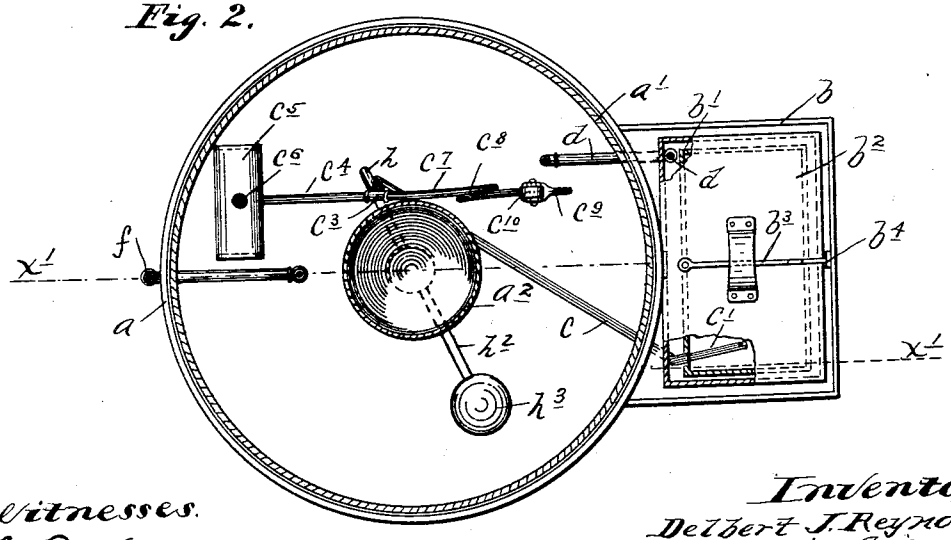

Witnesses.
C. F. Klym
L. P. Merchant.

Inventor
Delbert J. Reynolds.
By his Attorney.
Jas. P. Williamson

THE NORRIS PETERS CO., PHOTO-LITHO., WASHINGTON, D. C.

(No Model.) 2 Sheets—Sheet 2.

D. J. REYNOLDS.

ACETYLENE GAS GENERATOR.

No. 590,441. Patented Sept. 21, 1897.

Fig. 3.

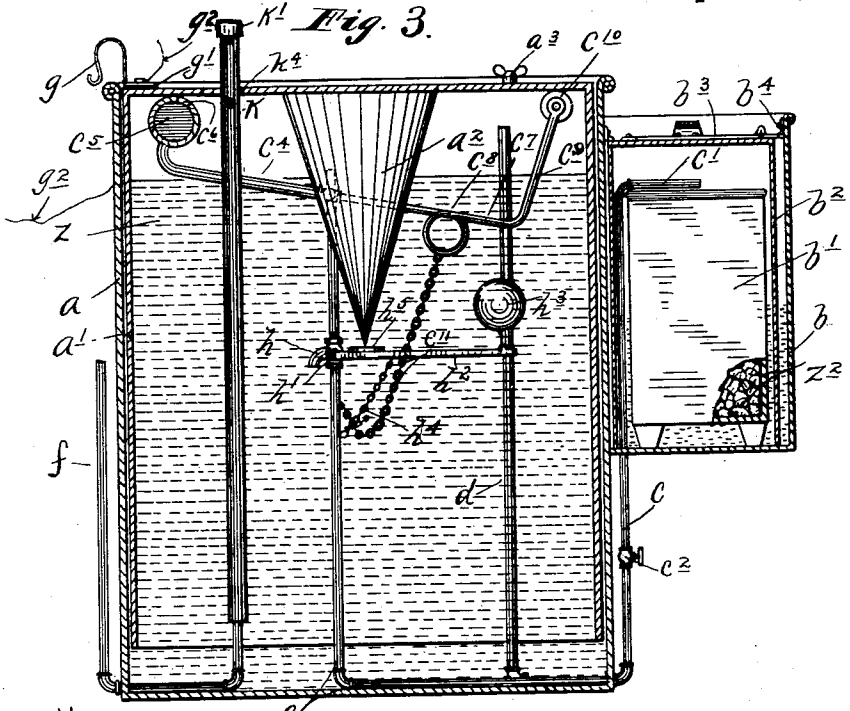

Fig. 4.

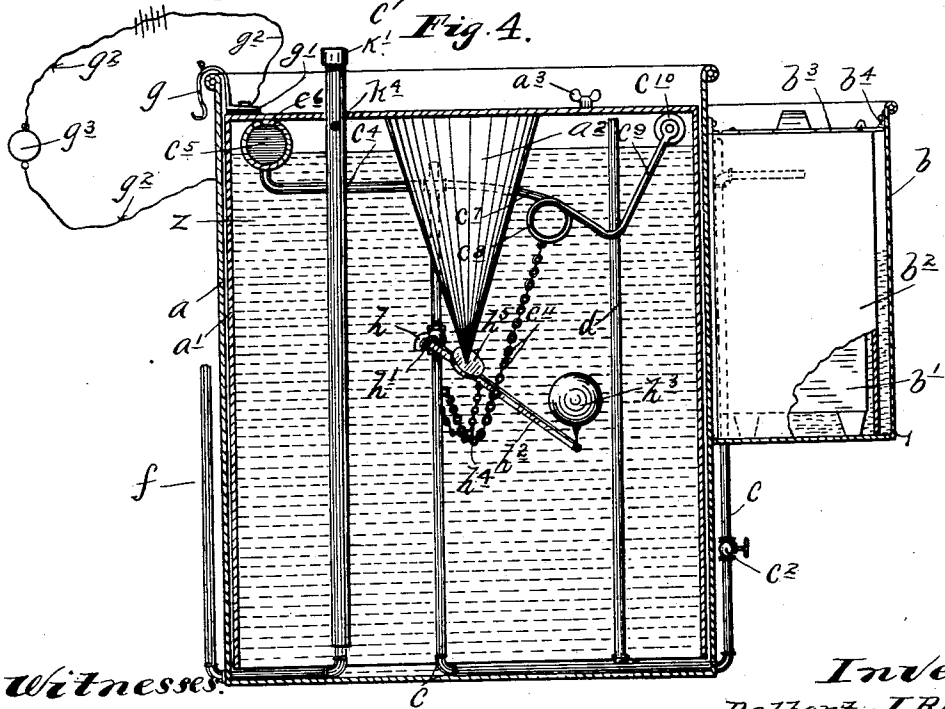

Witnesses:
C. F. Kilgore
R. D. Merchant.

Inventor
Delbert J. Reynolds.
By his Attorney.
Jas. P. Williamson.

THE NORRIS PETERS CO., PHOTO-LITHO., WASHINGTON, D. C.

UNITED STATES PATENT OFFICE.

DELBERT J. REYNOLDS, OF WINNEBAGO, MINNESOTA, ASSIGNOR, BY MESNE ASSIGNMENTS, TO THE WALMSLEY, FULLER & COMPANY, OF CHICAGO, ILLINOIS.

ACETYLENE-GAS GENERATOR.

SPECIFICATION forming part of Letters Patent No. 590,441, dated September 21, 1897.

Application filed July 17, 1896. Serial No. 599,517. (No model.)

To all whom it may concern:

Be it known that I, DELBERT J. REYNOLDS, a citizen of the United States, residing at Winnebago city, in the county of Faribault and State of Minnesota, have invented certain new and useful Improvements in Acetylene-Gas Generators; and I do hereby declare the following to be a full, clear, and exact description of the invention, such as will enable others skilled in the art to which it appertains to make and use the same.

My invention relates to gas-generators, and has for its especial object to provide certain improvements in that class of gas-generators which are employed for generating acetylene gas by automatically controlling the contact between bodies of calcic carbid and water.

The first feature of my invention is directed to a device for causing the discharge of a given amount of water from the water-supply tank or source of water-supply onto the calcic-carbid bodies contained in the generating-chamber. This device comprises a dipper which is connected through a suitable conveying-pipe with the generating-chamber and is operated directly or indirectly by the movable member of the tank-sections.

The second feature of my invention consists in the provision of an alarm device which will operate to indicate when either one of the gas-producing substances has been exhausted or rendered unavailable, so that a further generation of gas cannot be produced without reloading or recharging the apparatus.

The third feature of my invention consists in providing, in connection with the alarm device, means whereby the movable tank-section may continue to lower and feed off the residue of the gas remaining in the gasometer or holder or a portion thereof after the alarm device has been sounded and during a sufficient period of time to permit the apparatus to be recharged with the exhausted gas-producer.

The fourth feature of my invention consists in providing a device for flooding the generating-chamber with water and thereby clearing the same of the residue of gas which is left therein after the carbid in the said generating-chamber has been so far eaten up or decomposed that the further generation of gas under the action of the dipper is stopped. This feature permits the generating-chamber to be opened and recharged with carbid without danger or annoyance from escaping gas, and also serves to insure the complete decomposition of every particle of carbid contained in the generating-chamber. The flooding device is arranged to be automatically controlled by the movement of the movable section of the gasometer or tank.

My invention also comprises minor details of construction, which, as well as the above-noted generic features, will be fully set forth in the following detailed description and be defined in the claims.

The preferred form of my invention is illustrated in the accompanying drawings, wherein, like letters referring to like parts throughout the several views—

Figure 1 is a central vertical section taken through the apparatus substantially on the line x' x' of Fig. 2. Fig. 2 is a horizontal section taken substantially on the line x^2 x^2 of Fig. 1, some parts being broken away. Figs. 3 and 4 are vertical sections through the apparatus corresponding in most respects to Fig. 1, but showing some of the parts in full and illustrating different positions of the parts of the apparatus.

a indicates the fixed tank-section, in which is located a column of water z, and a' indicates the inverted movable tank-section, which works telescopically within the tank-section a and is seated in said column of water z. Depending from the center of the head of the movable tank-section a' is a hollow conical water-displacer a^2, the point of which projects downward into the column of water z. The conical projection a^2 is open at its large or upper end and is adapted to receive a load of sand z', which may be used to properly weight the movable tank-section, so as to give the desired pressure on the gas confined therein. This cone a^2 serves several purposes—to wit, first, it serves to decrease the internal area of the cross-section tank-section a' toward its upper end; second, it serves as a water-displacer to cause the column of water z to rise rapidly as the tank-section a' lowers; third, it serves as a pocket into which the weighting-sand may be loaded, and, fourth,

incidentally it serves to operate the flooding device. In the top of the tank-section a' is shown an air-vent a^8, through which air may be let off when starting the apparatus to work.

The generating-chamber is located exterior of the storage-tank a a', and, as shown, is formed by a pocket-like compartment or lateral extension b, which is secured to and projects from the tank-section a. The lower end of this extension b is closed, while the upper end of the same is open. Into this pocket or extension b a box-like carbid-holder b', with an open upper end, is loosely set. Over this carbid-holder b' an inverted box-like cover b^2 is set. The walls of this box-like cover b^2 fit within the pocket or extension b with considerable play, so as to leave continuous water-chamber around the same to form a gas seal and to cool the generator. As shown, the cover b^2 is rigidly secured in position by means of a latch b^3, which is pivoted on said cover b^2 and engages under a lug b^4 on said pocket b.

z^2 indicates bodies of calcic carbid with which the carbid-holder b' is partially filled.

Water is caused to flow at intervals from the tank-section a into the generating-chamber and onto the carbid z^2 in the holder b' through a U-shaped pipe c, one end of which is closed and terminates within the storage-tank just above the normal surface of the column of water z, and the other end of which terminates in a nozzle-piece c', located in the generating-chamber in position to discharge into the carbid-holder b'. As shown, the external portion of this pipe c is provided with a valve c^2. To the upper end of the pipe c, within the gasometer or storage-tank, is pivoted a T-head c^3, which is in communication with said pipe c. At one end this T-head c^3 is secured to and is in communication with the fixed end of a small pipe c^4, the free end of which terminates in a cylindrical water-dipper c^5, provided on its upper face with an opening c^6. At its other end the T-head c^3 is secured to and closed by the fixed end of a spring-arm c^7. As shown, this spring-arm c^7 is formed with a curl or eye c^8 and an upturned free end c^9, the extremity of which is provided with an antifriction-roller c^{10}, adapted to engage with the under surface of the head of the tank-section a'. In the normal position of the parts—that is, when the normal or desired gas-pressure in the storage-tank is maintained, as indicated in Fig. 1—the weight of the dipper c^5 will be sufficient to carry the pivoted portions c^4 c^7 c^9 into the position shown in said Fig. 1. In this position it will be noted the dipper c^5 is submerged and filled with water, while the extreme downward movement of the same is limited by means of the flexible connection c^{11}, secured at one end to the pipe c and at its other end to the eye c^8 of the spring-arm c^7.

As is evident, when by a decrease in the volume of the gas in the holder the tank-section a' is permitted to lower into engagement with the roller c^{10} of the spring-arms c^7 c^9 the dipper c^5 will be raised above the nozzle end c' of the pipe c and will thereby cause its contents to flow through the pipe-arm c^4, T-head c^3, pipe c, and nozzle-sections c', from which nozzle-section it will be discharged onto the carbid z^2 in the holder b'. This will of course cause a generation of gas in the generating-chamber.

The gas generated in the generating-chamber escapes into the storage-tank through a gas-conveying pipe d, one end of which terminates within the box-like cap b^2 and the other end of which terminates within the storage-tank above the water-level of the same. As shown, the exterior portion of the pipe d is provided with a valve d^2. The gas from the storage-tank is drawn off for use through a service-pipe f, the inner end of which terminates within said tank above the level of the column of water z. Before starting the apparatus to work a small amount of water must be placed in the bottom of the pocket or extension b of the generating-chamber. This water serves to seal said pocket b and the cap or box-like cover b^2 together with a gas-tight joint.

The alarm device shown comprises simply a U-shaped spring contact-piece g, which is carried by but insulated from the movable tank-section a' by means of an insulating-block g', a pair of wires or conductors g^2, connected one to the tank-section a and the other to said contact-piece g, and an electric bell or gong g^3, connected to said wires g^2.

The automatic flooding device shown comprises a faucet-like branch h, opening from the pipe c and located below the level of the column of water z, a valve h', normally closing said branch h, a lever h^2 on the stem of said valve h', and a float or air-bulb h^3, secured to the free end of said lever h^2. The air-bulb h^3 tends to hold the free end of the lever h^3 up and said valve h' closed, while the upward movement is limited or stopped by a chain or other flexible connection h^4, secured at one end to said lever and at its other end to the pipe c. As shown, the lever h^2 is provided with a striking disk h^5, which is adapted to be struck by the point of the cone a^2 under an extreme downward movement of the tank-section a'.

The movable tank-section a' has rigidly secured to its head a pipe k, the depending inner end of which telescopes over the inner end of the service-pipe f and the upper end of which projects above the head of said tank-section a' and is closed by a cap k'. The upper inner end of the service-pipe f is provided with a removable screw-threaded collar k^2, and the lower end of the depending pipe k is provided with an internal annular flange k^3. These collars or flanges k^2 and k^3 are adapted to engage and act as stops to prevent the removable tank-section a' from being drawn out of the tank-section a. However, by removing the cap k' the collar k^2 on the pipe f

may be removed by means of a properly-constructed wrench, after which the movable tank-section a' may be raised out of the fixed tank-section a. The pipe k is also provided with one or more perforations k^4, through which the gas in the gasometer or storage-tank may flow to the open upper end of the service-pipe f. The size of the water-dipper c^5 should be such that the amount of water which it will contain is less than enough to generate the gasometer full of gas. The telescoping pipe-sections k and f also serve to prevent the movable gasometer-section a' from tilting out of a perpendicular position when it is raised.

The operation of the apparatus constructed as above described, briefly summarized, is substantially as follows: As already described in detail, when the gas is drawn off through the pipe f the tank-section a' will be permitted to lower and to operate the pivoted dipper $c^4 c^5$, thereby discharging a quantity of water onto the carbid in the generating-chamber, which, generating a fresh supply of gas, will cause the said tank-section a' to again rise and permit said dipper to fall back into its normal position and be again filled with water. Under this continued action the gas will be generated in predetermined quantities and at such intervals as may be necessary to keep up the supply of gas in the holder or storage-tank. When, however, one of the gas-producing substances has been entirely decomposed or eaten up, so that the act of generating gas is stopped, the tank-section a' will, as the gas in the holder is drawn off through the pipe f, be permitted to descend into the positions shown in Figs. 3 and 4. In the positions shown in Fig. 3 both the roller c^{10} and the dipper c^5 of the pivoted water-conveying device are engaged by the under surface of the head of the tank-section a' and the free end of the spring-contact g is thrown into contact with the ribbed edge of the tank-section a, thus closing the circuit through the wires g^2 and sounding the bell or gong g^3. This will give notice that the carbid-holder needs refilling, which may of course be readily done after first closing the valves c^2 and d^2 of the pipes c and d, respectively, and then removing the cover b^3 and carbid-holder b'. In the movement of the cone a^2 and tank-section a' from the positions shown in Fig. 3 into the positions shown in Fig. 4 the lever h^2 and float h^3 will be forced downward and the faucet or branch-pipe section h of the water-pipe c will be opened by the valve h'. This will of course allow the column of water z in the gasometer to lower and flow through the pipe c into the generating-chamber. The inflow of the water into the generating-chamber will cause the residue of gas which has been left therein to flow through the gas-pipe d into the gasometer or storage-tank, thus allowing the generating-chamber to become completely filled with water. The generating-chamber, being filled with water and cleared of gas, can be opened, cleaned, and recharged without any danger or possibility of letting gas escape into the room. During the time that the carbid-holder b' is being refilled and replaced in working position in the generating-chamber the tank-section a' may continue to lower, under which action the spring-arm c^7 c^8 c^9 will yield, so as to permit the parts to assume the positions indicated in Fig. 4. The difference in the amount of gas contained in the holder in the positions indicated in Fig. 3 and that contained in the holder in the positions indicated in Fig. 4 is sufficient to last under a maximum consumption of the gas during the time required to recharge the carbid-holder and replace the same in working position.

It will be noted that the free end of the spring-contact g is so bent that it will keep contact with the rim of the tank-section a for only a short interval, during which time only the gong g^3 will be sounded.

It must be evident from the foregoing that in virtue of the depending cone a^2 the amount of surface of the tank-section a' which is exposed to the upward pressure of the gas confined in the holder is gradually decreased as the said cone and tank-section are lowered into the column of water.

From the above it becomes apparent that the flooding action of the generating-chamber accomplishes two purposes—to wit, first, it serves to cause the complete decomposition of every particle of carbid which may remain in the carbid-holder, and, second, it serves to drive all of the generated gas out of the generating-chamber before the generating-chamber is open for the purpose of recharging the carbid-holder. The first noted function is probably the most important of the two. It is a well-known fact that while the generation of the carbid is very rapid when water is first dropped onto the same it becomes slower and slower as the action of generation proceeds, and this often results in leaving a considerable quantity of carbid buried by the lime or decomposed gas. However, by flooding the generating-chamber and carbid-holder the large amount of water introduced will cause complete soaking of both the lime products and the carbid.

It will be understood, of course, that numerous alterations in the details of construction of the preferred form of my invention above described may be made without departing from the principles of my invention. For instance, instead of the cone a^2 the outer walls of the movable tank-section might be tapered or made to converge toward the top of the tank, and the surfaces either of the cone or these tapered sides instead of being formed with straight lines might be increased step by step or by zigzag lines.

What I claim, and desire to secure by Letters Patent of the United States, is as follows:

1. The combination with an expansible gasometer, of a generating-chamber, a dipper movable into and out of a body of liquid by

the movement of said gasometer, and a liquid-conveying pipe or connection between said dipper and said generating-chamber, substantially as described.

2. The combination with a pair of telescoping tank-sections, of a generating-chamber, a liquid-conveying pipe leading from said tank to said generating-chamber, and a dipper movable into and out of the liquid in said tank and having a hollow stem which is pivoted to and communicating with said liquid-conveying pipe, within said tank, and is operated by the movement of the movable tank-section, substantially as described.

3. The combination with a pair of telescoping tank-sections, of a generating-chamber exterior thereof, a liquid-conveying pipe extending from said tank to said generating-chamber, a dipper having a hollow stem pivoted to and communicating with said liquid-conveying pipe, and an extended arm projecting from the stem of said dipper and coöperating with the movable tank-section to throw said dipper into and out of the liquid of said tank, substantially as described.

4. The combination with a pair of telescoping tank-sections, of a generating-chamber exterior thereof, a liquid-conveying pipe extending from said tank to said generating-chamber, a dipper having a hollow stem pivoted to and communicating with said liquid-conveying pipe, and an extended arm projecting from the stem of said dipper and provided with a yielding or spring-mounted end adapted for coöperation with the movable tank-sections, substantially as described.

5. The combination with the telescoping tank-sections, of the generating-chamber exterior of the same, the water-conveying pipe *c* extending from said tank to said generating-chamber, and the pivoted lever pivoted to the upper tank end of said pipe *c*, comprising the pivoted T-head c^3, dipper and dipper-arm c^5, c^4, and spring-arm c^7, c^8 c^9, and the flexible connection c^{11} for limiting the upward movement of said spring-arm, substantially as described.

6. In a gas apparatus, the combination with the sections of an expansible gasometer or tank, of an alarm device operated by an extreme inward movement of the movable tank-section, to indicate when one of the gas-producing substances has been exhausted or rendered unavailable for generating purposes, substantially as described.

7. In a gas apparatus, the combination with a pair of telescoping tank-sections, of an electric circuit, the broken terminals of which are connected to contact-pieces secured one to each of the tank-sections and adapted to be engaged by an extreme inward movement of the movable tank-section, and an electrically-operated sounding device in said electric circuit for indicating when one of the gas-producing substances has been exhausted.

8. The combination with an expansible gasometer, of a generating-chamber, a water-conveying passage between said gasometer and generating-chamber, a valve in said passage, and means operated by an extreme contracted movement of said gasometer to open said valve and flood said generating-chamber, substantially as described.

9. The combination with an expansible gasometer or storage-tank, of a generating-chamber exterior thereof but in communication therewith through a gas pipe or passage, and also through a water-pipe which has a valved opening below the water-level of said tank, a valve-controller normally holding the valve of said passage closed but adapted to be actuated by an extreme downward movement of the movable section of said tank to open said passage, substantially as described.

10. The combination with an expansible gasometer or storage-tank, of a generating-chamber exterior thereof but in communication therewith through a gas pipe or passage, and also through a water-pipe which has a valve-opening below the water-level of said tank, a lever on said valve-stem, an air-bulb or float on the free end of said lever, and a striking surface or projection carried by the movable section of said tank, adapted to engage said lever, substantially as described.

11. The combination with a generator and storage tank or holder, of a feed device regulating the water-flow into said generator and controlled by said storage-tank, a flooding device, involving a communicating passage between said generator and holder, a valve normally closing said passage, a float tending to hold said valve closed, and a part moved by the pressure of the generated gas, arranged to open said valve, against the action of said float, by an extreme movement of said part caused by the stopping of the automatic generating action at the complete or nearly complete exhaustion of one of the gas-producing substances, substantially as described.

In testimony whereof I affix my signature in presence of two witnesses.

DELBERT J. REYNOLDS.

Witnesses:
BESSIE B. NELSON,
F. D. MERCHANT.