May 31, 1938. T. H. MORGAN 2,119,285

VIBRATOR

Filed July 30, 1936 2 Sheets-Sheet 1

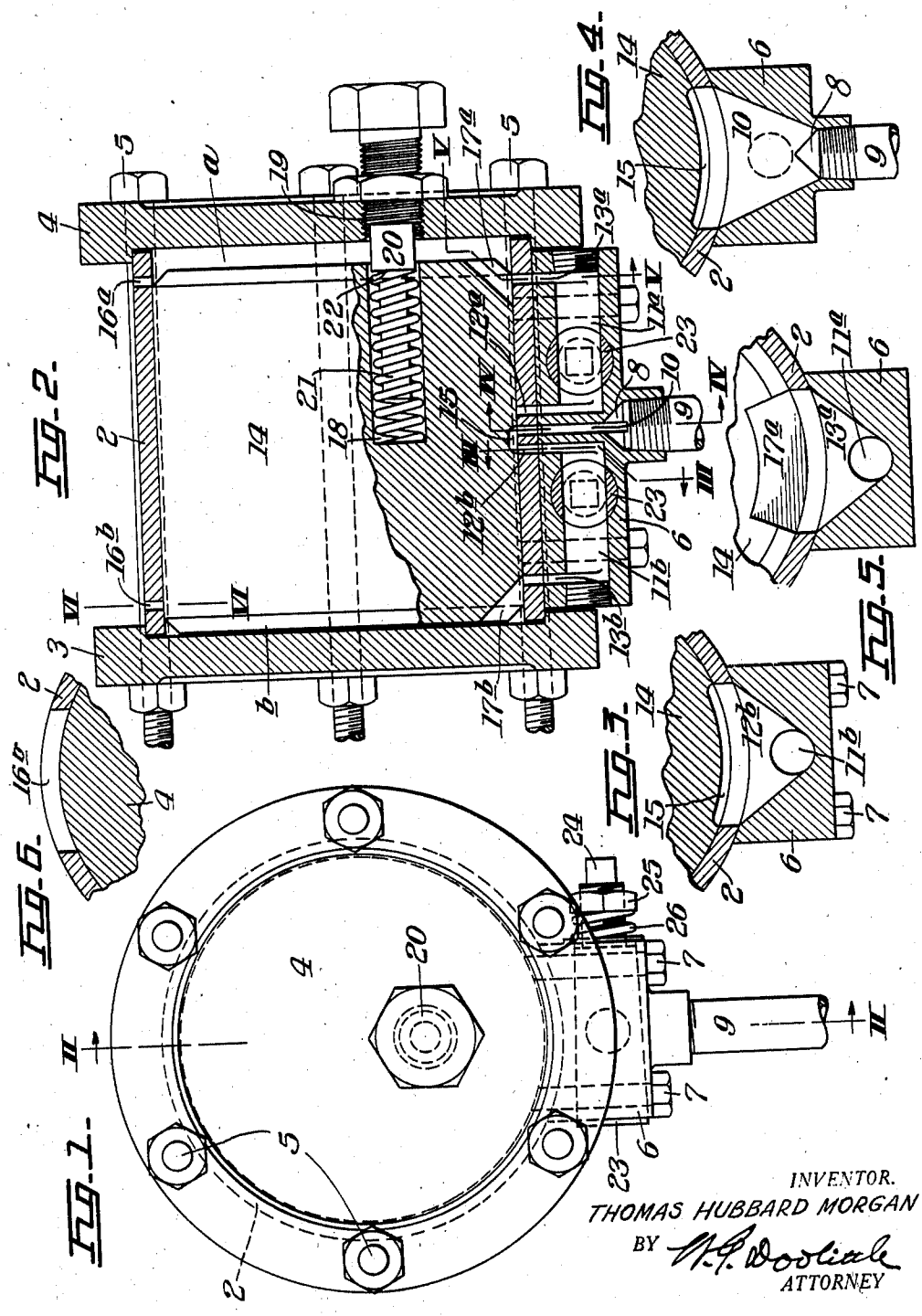

INVENTOR.
THOMAS HUBBARD MORGAN
BY W. P. Woodside
ATTORNEY

May 31, 1938. T. H. MORGAN 2,119,285

VIBRATOR

Filed July 30, 1936 2 Sheets-Sheet 2

Fig. 7.

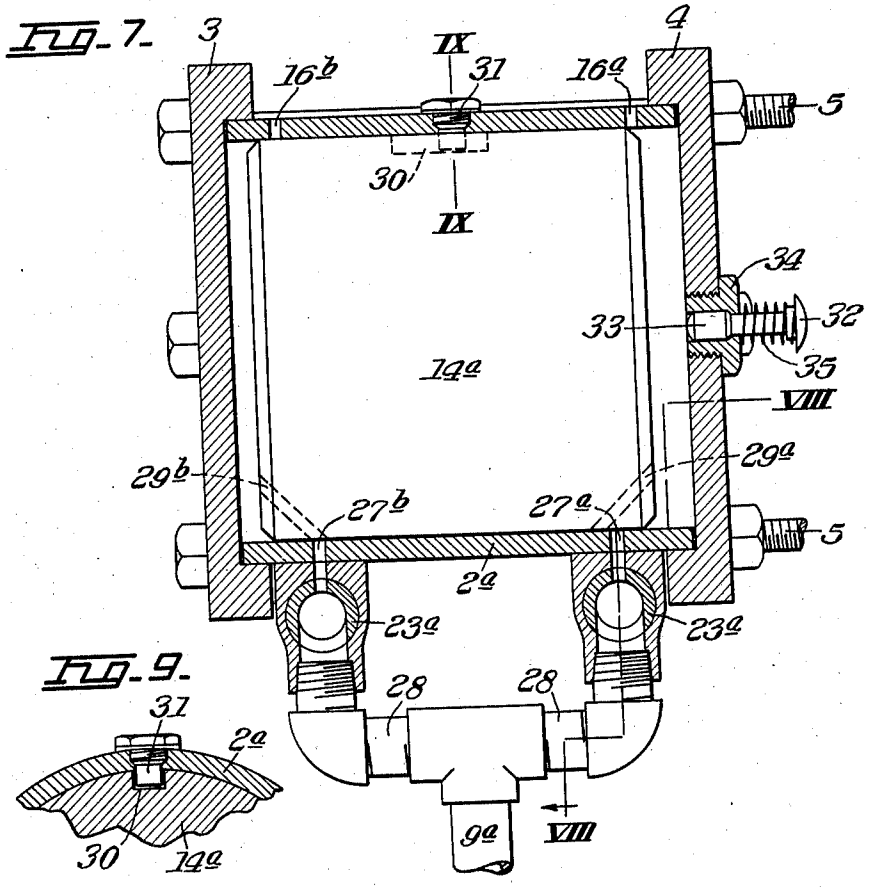

Fig. 9.

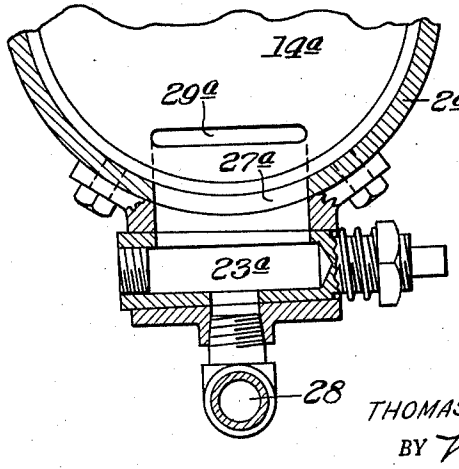

Fig. 8.

INVENTOR.
THOMAS HUBBARD MORGAN
BY T. H. Doolittle
ATTORNEY

Patented May 31, 1938

2,119,285

UNITED STATES PATENT OFFICE

2,119,285

VIBRATOR

Thomas Hubbard Morgan, Kittanning, Pa.

Application July 30, 1936, Serial No. 93,400

9 Claims. (Cl. 121—17)

This invention relates to improvements in vibrators of the reciprocating type, and more particularly to fluid-operated or pneumatic vibrators capable of operation at high frequencies.

Vibrators of the character stated are particularly advantageous in connection with the conveyance and classification of materials, the vibrations thereby produced setting the particles or constituents of the materials in motion, whereby said materials may be transferred in a conduit from place to place, or may be graded according to their specific gravities, sizes, etc. upon a suitable screen or table.

My invention contemplates a vibrator of the character stated having a high compression stroke, whereby the reciprocating piston is cushioned and retarded at the end of each alternate movement for rapid reversal of direction and resulting high frequency operation.

A further object is to maintain a substantially constant flow of fluid through the vibrator for greater efficiency and economy.

I also contemplate the provision of means for selectively varying the stroke of the vibrator for unequal vibrations, to adjustably control and provide relatively high vibrations in one and the same direction.

Additional objects are to provide a device which is simple and inexpensive, and which will operate at relatively low pressures with a minimum consumption of operating fluid.

My invention may be more readily understood from the following description, taken in connection with the accompanying drawings, wherein:

Fig. 1 is an end elevational view of a high frequency vibrator embodying my invention;

Fig. 2, a longitudinal section thereof taken on the line II—II of Fig. 1;

Figs. 3, 4, 5 and 6, detail sections taken on the respective lines III—III, IV—IV, V—V and VI—VI of Fig. 2;

Fig. 7, a view similar to Fig. 2, showing a modified form of my invention;

Fig. 8, a sectional view thereof, taken on the line VIII—VIII of Fig. 7; and

Fig. 9, a detail sectional view taken on the line IX—IX of Fig. 7.

Referring to the drawings, and particularly to Figs. 1 to 6 inclusive, 2 designates a cylinder having closure heads 3 and 4 secured thereto in any suitable manner, as by bolts 5. An intake manifold 6 extends longitudinally of the cylinder and may comprise an integral part thereof, or as shown, may be separately formed and secured to the cylinder walls as by bolts or screws 7. This manifold has a central passage 8 in communication with a fluid inlet conduit 9 connecting with any suitable source of supply of fluid under pressure, as for example, compressed air. 10 designates a central inlet port extending from the passage 8 to the interior of the cylinder 2.

Extending longitudinally of the manifold 6 on either side of the central port 8, and out of direct communication therewith, are fluid chambers 11*a* and 11*b*, the exponents being employed to designate right and left hand relation with respect to the center of the vibrator. At their inner ends, the chambers 11*a* and 11*b* communicate with the interior of the cylinder 2 by ports 12*a* and 12*b* respectively, said ports being spaced equidistant longitudinally on either side of the central inlet port 10. The outer ends of the chambers respectively communicate with the interior of the cylinder adjacent the ends thereof by ports 13*a* and 13*b*.

A piston or plunger 14 is provided for reciprocation within the cylinder, said plunger having a central groove 15 in the periphery thereof for coaction with the ports 10, 12*a* and 12*b*, the longitudinal dimension of the groove 15 being such as to provide enclosing communication between the central port 10 and either of the said inner ports 12*a* and 12*b*, depending upon the right or left hand location of the piston 14. 16*a* and 16*b* designate exhaust ports in the cylinder 2 adjacent the ends thereof.

The ends of the piston 14 are provided with inclined passages 17*a* and 17*b* for establishing communication with the ports 13*a* and 13*b* and their respective ends of the cylinder. The said inclined passages are cut diagonally through the peripheral edges of the piston ends, opening through the end faces and peripheral surface of the piston, as clearly shown in Figs. 2 and 5.

One end of the piston 14 is drilled or formed with a longitudinal bore 18, disposed eccentrically of the longitudinal axis of said piston, for the purpose of receiving a guide stud 19 secured in the head 4 as by a threaded engagement 20. A spring 21 surrounds the inner end of the stud 19, and is seated in the bore 18, and contacts an abutment 22 on the stud, said spring being operable in a manner hereinafter described. The function of the guide 19 is to insure proper alinement of the cooperating and registering ports in the piston and cylinder, by preventing relative rotation of the said parts without interference with the reciprocation of the piston.

It will be understood that vibrations are produced with my invention by a rapid reciprocation

of the piston, whereby the change of directional movement of said piston causes alternating reactive forces to be imparted to the cylinder and to the device to which said cylinder may be attached or connected.

The operation of my invention is as follows. With the piston 14 in the left-hand end of the cylinder 2, as in Fig. 2, the exhaust port 16b is closed by the piston, and the said end of the cylinder is in open communication with the pressure supply line 9 through piston passage 17b, port 13b, chamber 11b, and ports 12b, 10 and inlet chamber 8, the ports 10 and 12b being connected by means of the groove 15 in the piston. Hence, upon applying fluid from line 9, through any suitable valve, the applied pressure acts upon the left-hand head b of the piston, moving the same to the right. During this initial or impulse pressure or the beginning of the piston travel, the right-hand end of the piston is subjected to atmospheric pressure due to the open exhaust port 16a, whereby a rapid movement is imparted to the piston.

Upon traversing a distance equal to the longitudinal width of the exhaust ports, the port 16a is closed by the piston and the port 16b is opened to the atmosphere. Likewise, this travel of the piston 14 closes the port 12b, cutting off the fluid supply to the left-hand end of the cylinder. Under these conditions, the piston continues its movement under the momentum of the applied impulse, until the body of fluid enclosed in the right-hand end of the cylinder 2 is compressed sufficiently to negative the force of momentum, whereby the piston is cushioned and stopped before striking the cylinder head 4.

During the momentum travel of the piston, the port 15 connects the ports 10 and 12a, whereby the right-hand end of the cylinder 2 is opened to the pressure in the supply line 9 through chamber 11a, port 13a and passage 17a of the piston. At the instant after the piston is cushioned as above stated, it is caused to move in a reverse direction under the pressure of the supply source acting upon the right-hand piston head a, whereupon the operation is alternated from left to right with exceptional rapidity. In moving the piston 14 from right to left, the other ports and fluid passages will be employed in a like manner, as will be readily understood.

Attention is directed to the free or floating piston 14 which is operated without striking or hammering against the cylinder ends in the manner of many present pneumatic devices. This action is due to the provision of a relatively high compression stroke in my vibrator, whereby the piston is retarded and reversed against and by means of a pressure fluid cushion.

The measure or amplitude of vibrations to be produced by vibrators of the character stated is equal to the product of the reciprocating weight and the distance through which it moves. Hence, for a required amplitude, the weight and stroke of the piston may be suitably related by the designer.

However, I have found that exceedingly increased efficiency may be obtained by providing the piston of increased diameter, while maintaining its weight at the desired amount, whereby the increased area of the piston will provide sufficient compression pressure in advance of said piston to effect the proper cushioning retardation above referred to.

It will be observed that the initial portion of the stroke of piston 14 takes place against fluid or air at atmospheric pressure, but upon providing sufficient piston area, I am enabled to provide a compression cushioning in advance of the limits of the cylinder which will effect a rapid deceleration and reversal of the piston.

Vibrator operation without striking or hammering eliminates the attendant noise, and also prevents upsetting of the metal of the piston and cylinder which may result from striking contact and cause injury to the parts. Likewise, it is evident that the striking contact of piston and cylinder must be accompanied by a low compression stroke, whereby the speed and frequency of the vibrations will be less than that obtained by my invention.

A further important feature of my invention resides in the construction and relation of the fluid ports and passages to obtain maximum efficiency. As stated, the piston has a relatively short stroke, which stroke in some constructions may be less than one-half of an inch in length, whereby it becomes essential to construct the fluid passages in a particular manner in order to obtain the said maximum efficiency of the operating fluid.

To this end, I have provided the series of ports 10, 12a, 12b, 13a, 13b, 16a and 16b of minimum width or dimension in a direction longitudinally of the cylinder 2 while maintaining their cross-sectional or flow areas substantially equal to that of the supply line 9, by extending said ports transversely of the cylinder in the form of slots. The groove 15 in the piston is also of minimum depth and has a transverse dimension equal to that of its coacting ports 10, 12a and 12b, and by making the flow area of the chambers 11a and 11b also substantially equal to that of the supply line 9, it will be seen that I maintain a constant and maximum pressure flow through the vibrator circulating passages. The maximum dimension of the said ports being transverse with respect to the direction of movement of the piston, it is evident that the ports are opened to capacity in the shortest possible time interval.

By means of the aforesaid construction, my improved vibrator utilizes the greatest amount of available energy of the operating fluid, by providing for capacity as well as uniform flow therein. Since the flow area through the ports and passages is substantially constant, there will be a constant flow without undesirable expansion and accompanying pressure losses. By so utilizing the supplied fluid, I am enabled to operate my invention at minimum pressures and at an exceptionally low rate of consumption of fluid.

These factors, together with the cushioning retardation and reversal of the piston, provide for extremely high frequency operation at low cost. For example, I have successfully operated a vibrator of the character herein set forth having an 18-pound piston of 4½ inches diameter, on compressed air supplied at 50–90 pounds per square inch gage. The measured speed of said vibrator was from 7000 to 10,000 strokes per minute, with a low consumption of air per minute. This vibrator was found capable of carrying considerably heavy loads when associated with a vibrating screen or a conveyor conduit.

The spring 21, mounted on the stud 20, functions to insure the proper positioning of the piston 14 when inactive, by preventing said piston from coming to rest in mid-center position. Said spring further provides a means of unbalancing the stroke of the piston by increasing the tension thereof through adjustment of the screw stud 20.

Increasing the spring tension will provide for vibrations of greater magnitude in one direction than in the other by varying the speed of said strokes.

I further contemplate a more sensitive and consistently uniform control for unbalancing the vibrations to produce greater vibratory impulses in one direction than in the other, as is desirable in the conveyance of materials by means of vibration. One or both of the chambers **11***a* and **11***b* may be provided with a control valve **23** in the form of an apertured tapered plug having a projecting stem **24** threaded to receive a tightening nut **25**. A spring **26** is disposed between the nut and the side wall of the manifold **6**, whereby the proper tension may be imparted to the taper fit of the valve or valves to maintain the same in fixed position without leakage.

Suitable handles or wrench faces may be provided on the valve stems for manual adjustment thereof as desired. It will be seen that the flow through the chambers **11***a* and **11***b* may be varied while the vibrator is in operation, whereby the desired magnitude of unbalanced vibration may be accurately provided by varying the angular position of the valve apertures with respect to the said chambers.

It will also be noted that by varying the flow of fluid to one or both ends of the cylinder, a differential of speed may be obtained in the piston travel as desired, whereby said piston travels faster in one direction than in the other, and thus sets up vibratory impulses of greater magnitude in one direction than in the other.

Figs. 7 to 9 inclusive illustrate a modified form of my invention, wherein the cylinder **2***a* is provided with right and left hand inlet ports **27***a* and **27***b* connected with the supply line **9***a* through adjustable control valves **23***a* and branch pipes or conduits **28**. Exhaust ports **16***a* and **16***b* are provided as before.

The piston **14***a* is formed with angular end ports **29***a* and **29***b* respectively coacting with the inlet ports **27***a* and **27***b* to alternately admit fluid from the supply line to opposite ends of the cylinder. Said ports are in the form of narrow transverse slots as before to provide equal flow areas for undiminished passage of the fluid therethrough.

As in the form of Figs. 1 and 2, the piston **14***a* is of enlarged diameter to provide for a high compression stroke in the manner set forth. The operating fluid will be alternately admitted to the left and right hand ends of the cylinder to reciprocate the piston and produce a vibrating action.

To insure proper registering alinement of the ports in the cylinder and piston, the latter may be provided with a longitudinal slot **30** to receive a stud or key **31** mounted on the cylinder, whereby the piston is prevented from rotation relative to its cylinder. See Fig. 9.

In place of the spring **21** of the form of Fig. 2, a starting button **32** may be provided in one of the cylinder heads, as in Fig. 7, said button having a plunger **33** slidable in a mounting bushing **34** in said head. A spring **35** normally retracts the plunger **33** within its bushing out of engagement with the piston **14***a*. However, in the event the said piston comes to rest in dead center position, the operator may push the button **32**, whereby its plunger **33** engages and moves the piston into registering position for admission of fluid through ports **27***b* and **29***b* to start the vibrator in motion.

The vibrator of my invention may be employed for various purposes, said vibrator being connected with the device to be vibrated as by means of the bolts **5** or any other suitable connecting or mounting means whereby the vibrations may be properly related as to their direction with respect to the purpose to be served.

I claim:

1. A vibrator including a cylinder and a piston reciprocable therein, means for alternately admitting fluid to the ends of the cylinder including a pair of fluid supply ports, a pair of exhaust ports adjacent the ends of the cylinder, said ports being in the form of transversely disposed slots having minimum dimension in the direction of piston movement and coacting with the piston to provide a short stroke and high frequency piston movement.

2. A vibrator including a cylinder and a piston reciprocable therein, means for alternately admitting fluid to the ends of the cylinder including a pair of fluid supply ports, a pair of exhaust ports adjacent the ends of the cylinder, said ports being in the form of transversely disposed slots having minimum dimension in the direction of piston movement and coacting with the piston to provide a short stroke and high frequency piston movement, the fluid admission means having substantially equal flow areas throughout.

3. A vibrator including a cylinder and a piston reciprocable therein, means for alternately admitting fluid to the ends of the cylinder including a central inlet port to the cylinder, a pair of fluid chambers on either side of said central port each having an inner port communicating with the interior of the cylinder adjacent said central port and an outer port communicating with an end of the cylinder, the piston having a central port for alternately connecting the central inlet port with said inner ports, said ports and chambers having substantially equal flow areas, a pair of exhaust ports adjacent the ends of the cylinder, the central port and inner and exhaust ports being in the form of transversely disposed slots having minimum dimension in the direction of piston movement and coacting with the piston to provide a short stroke and high frequency piston movement.

4. A vibrator including a cylinder and a piston reciprocable therein, means for alternately admitting fluid to the ends of the cylinder including an inlet port adjacent each end thereof, the piston having a port in each end thereof opening in its periphery and extending outwardly in angular relation through the piston heads for direct communication with the ends of the cylinder, the piston and inlet ports having substantially equal flow areas, a pair of exhaust ports adjacent the ends of the cylinder, all of said ports being in the form of transversely disposed slots having minimum dimension in the direction of piston movement and coacting with the piston to provide a short stroke and high frequency piston movement.

5. A vibrator including a cylinder and a piston reciprocable therein, means for alternately admitting fluid to the ends of the cylinder including a pair of fluid ports controlled by the piston, said ports being in the form of transversely disposed slots having minimum dimension in the direction of movement of and in relation to the stroke of the piston, the fluid admission means having substantially equal flow areas throughout, an exhaust port adjacent each end of the cylinder in the form of transverse slots having minimum dimension in the direction of piston

movement and controlled by the latter to permit compression of fluid in advance of the piston, thus providing a pressure cushion effective to retard and reverse the piston movement without striking the ends of the cylinder, and providing a short stroke and high frequency piston movement.

6. A vibrator including a cylinder, a free non-rotatable piston reciprocable therein, said cylinder having a fluid inlet port adjacent each end thereof, the piston having end ports opening in the periphery thereof to register with the inlet ports and extending outwardly in angular relation through the piston heads for direct communication with the end portions of the cylinder, the cylinder inlet ports and piston end ports having substantially equal flow areas preventing pressure drop during communicating flow therethrough, said cylinder also having exhaust ports adjacent the ends thereof in direct communication with the interior of the cylinder and the atmosphere, means supplying fluid to the inlet ports, the passage of said fluid to the piston and cylinder being controlled by the movements of the piston to alternately stroke the latter.

7. A vibrator including a cylinder, a free non-rotatable piston reciprocable therein, means providing a central fluid supply inlet port to the cylinder and longitudinally extending fluid chambers on either side of said inlet port, each chamber having an inner port communicating with the interior of the cylinder adjacent the inlet port and having an outer port communicating with an end of said cylinder, the piston having an arcuate central groove extending within a portion only of its periphery for alternately connecting the inlet port with the said inner ports, said inlet ports, fluid chambers, inner ports, and central piston groove having equal flow areas preventing pressure drop during communicating flow therethrough, said cylinder also having exhaust ports adjacent the ends thereof controlled by the piston for direct communication with the atmosphere.

8. A vibrator including a cylinder and a piston reciprocable therein, means for alternately admitting fluid to the ends of the cylinder including a pair of fluid supply ports, a pair of exhaust ports adjacent the ends of the cylinder, said ports being in the form of transversely disposed slots having minimum dimension in the direction of piston movement and coacting with the piston to provide a short stroke and high frequency piston movement, and adjustable means for varying the flow of fluid to the ends of the cylinder to vary the frequency of piston movement in opposite directions.

9. A vibrator including a cylinder and a piston reciprocable therein, means for alternately admitting fluid to the ends of the cylinder including a central inlet port to the cylinder, a pair of fluid chambers on either side of said central port each having an inner port communicating with the interior of the cylinder adjacent said central port and an outer port communicating with an end of the cylinder, the piston having a central port for alternately connecting the central inlet port with said inner ports, said ports and chambers having substantially equal flow areas, a pair of exhaust ports adjacent the ends of the cylinder, the central port and inner and exhaust ports being in the form of transversely disposed slots having minimum dimension in the direction of piston movement and coacting with the piston to provide a short stroke and high frequency piston movement, and adjustable means for varying the flow of fluid to the ends of the cylinder to vary the frequency of piston movement in opposite directions.

THOMAS HUBBARD MORGAN.