G. WESTINGHOUSE, Jr.

Railroad-Car Brakes.

No. 142,600. Patented September 9, 1873.

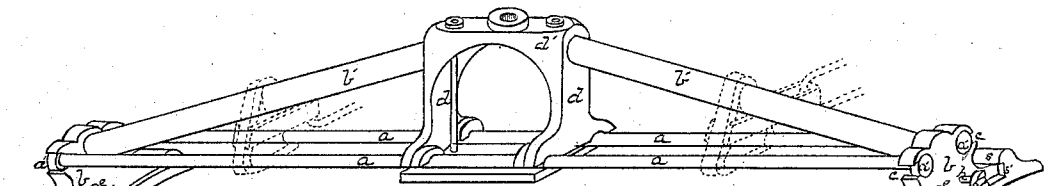

Fig. 1.

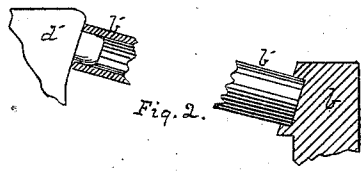

Fig. 2.

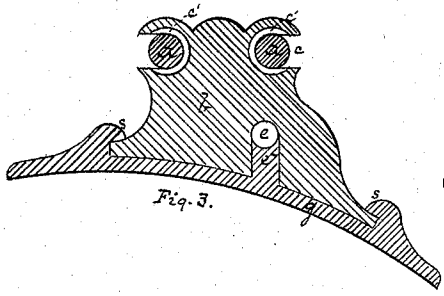

Fig. 3.

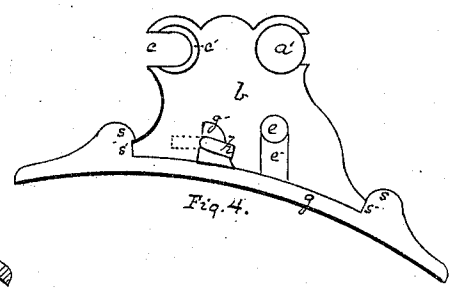

Fig. 4.

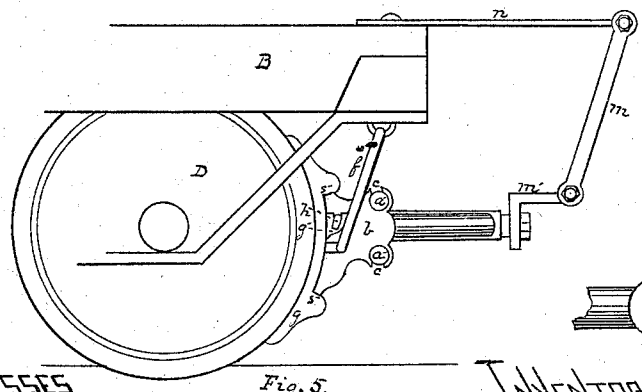

Fig. 5.

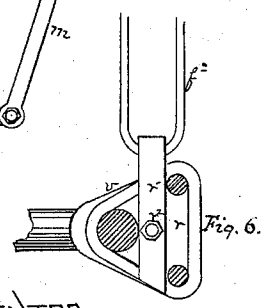

Fig. 6.

WITNESSES

James L. Kay.

R. E. Henderson.

INVENTOR

George Westinghouse Jr.
by Bakewell, Church & Kerr,
his Att'ys

AM. PHOTO-LITHOGRAPHIC Co. N.Y. (OSBORNE'S PROCESS.)

UNITED STATES PATENT OFFICE.

GEORGE WESTINGHOUSE, JR., OF PITTSBURG, PENNSYLVANIA.

IMPROVEMENT IN RAILROAD-CAR BRAKES.

Specification forming part of Letters Patent No. **142,600**, dated September 9, 1873; application filed March 8, 1873.

To all whom it may concern:

Be it known that I, GEORGE WESTINGHOUSE, Jr., of Pittsburg, in the county of Allegheny and State of Pennsylvania, have invented a new and useful Improvement in Railroad-Car Brakes; and I do hereby declare the following to be a full, clear, and exact description thereof, reference being had to the accompanying drawing making a part of this specification, in which—

Figure 1 is a perspective view of my improved brake-bar with shoes attached. Fig. 2 shows in section the seating of the ends of the braces. Fig. 3 is a sectional view through the brake shoe and holder just inside the flanged heads of the tie-rods. Fig. 4 is an outside view of one shoe-holder and shoe. Fig. 5 is an end view, to a less scale, of the apparatus as applied to a truck; and Fig. 6 illustrates the construction of auxiliary hangers and clamps for holding the tie rods and braces together.

Like letters of reference indicate like parts in each.

My invention relates to the construction of an improved brake-bar to an improved device for fastening the removable shoe, and to an improvement in connecting said devices with each other and with the truck.

To enable others skilled in the art to make and use my invention, I will describe its construction and mode of operation.

In the construction of the brake-bar I make use of the truss principle. As shown in the drawings, the shoe-holders *b b* are connected by one or more tie-rods, *a a*, on the ends of which are the upset heads *a'*. Notches *c c* are cut in the edges of the holders *b*, at suitable points, of proper size, to admit the rods *a*, but not large enough to take in the heads *a'*; but such notches are reamed out at their inner ends, and on the outer faces of the holders sufficiently to form seats *c'* for the heads *a'*. These heads *a'* being so seated are prevented from being moved laterally out of place, or from being removed at all, so long as the truss is kept properly tightened up. The strain in the opposite direction is sustained by the braces *b' b'*, which, for ordinary purposes, may consist of sections or lengths of gas-pipe, and which each have a bearing at one end against a shoe-holder, and at the other end they bear directly, on the arch principle, against each other, or indirectly against an interposed block, *d'*, of the frame *d*, which latter may be of any suitable construction for holding the tie rods and braces in the proper relation with each other. In the edge of each holder *b*, next the wheel, is a deep recess, *e*, in which is the lower end or eye of the usual hanger *f*. The shoe *g* is made removable, and with a lug, *e'*, which entering the recess *e* keeps that end of the hanger *f* in proper position. At or near the upper and lower ends of the back face of each shoe, *g*, is an overhanging lip, *s*, which constitutes mechanically a groove, by means of which grooves the shoes are slid onto and held by the holders *b*; but these grooves are closed at their outer ends, as at *s'*, so that the shoes are prevented from sliding on too far. A lug, *g'*, is also made to project from the outer edge of the rear face of each shoe in proper position to be caught by a rotating hook, *h*, which, while the shoe is being slipped on, stands in the position shown by dotted lines in Fig. 4, and, after the shoe is in position, is turned down, as shown in full lines. This hook is screwed into, or in other suitable manner secured to, the holder *b*, and when turned down prevents the shoe from coming off.

The entire device is hung to the truck, as shown in Fig. 5, by the hangers *f*, and also by a hanger, *m*, which is connected, by an arm, *m'*, with the middle point or arch of the truss-bar, and extends thence to the end of a spring, *n*, which latter is fastened to and extends forward or back from the truck-frame B. These hangers are all arranged so that when the shoes are applied to the wheels D they will be inclined toward the wheel; hence, when the brakes are let off, the brake bar and shoes will swing clear of the wheels by their own weight. The additional hanger *m* is to prevent the brake-bar from tilting or rocking on its axis, whereby, if it were not prevented, the upper or lower ends of the shoes would be liable to come in contact with the wheels, even when the brakes are "off." The spring *n* is made with just sufficient elasticity to enable the shoes to be brought fairly against the wheels, notwithstanding the varying relative

position of shoes and wheels, resulting from the varying load and varying elasticity of the main car-spings; but, if other mode of providing for this variation be employed, a rigid arm may be substituted for the spring *n*. The hangers *m* and *f* constitute, in fact, what is known as a parallel motion. The hangers, instead of being connected at their upper ends to the truck, may depend from any fixed part of the car.

As an additional security against danger from accident, in case one of the shoe-holders becomes broken, I arrange a clamping device on each end of the compound brake-bar in about the positions shown by dotted lines in Fig. 1. This device, as illustrated in Fig. 6, consists of an outer band, *v*, which is slipped on over the tie rods and braces before the shoe-holder is attached, and which is of proper form for clamping onto all three. A block, *r*, made with seats for the tie rods and braces, is inserted from the opposite direction inside the band. A U-shaped clamp, r^1, secured by a bolt, r^2, holds the two together, so that they shall keep the tie rods and braces in the proper relative position in case of accident to the end holders. From this clamp r^1 a hanger, *f'*, may extend to the truck above, and constitute an auxiliary or safety hanger in case of accident to any of the other hangers.

What I claim as my invention, and desire to secure by Letters Patent, is—

1. The combination of the tie-rods *a a*, each having upset heads *a'*, the shoe-holders *b b* having lateral recesses for the insertion of the tie-rods, and the braces *b' b'* bearing against the inside of the shoe-holders, whereby the parts named are held in place solely by the tightening of the braces, substantially as described.

2. A shoe-holder having one or more recesses, *c c*, each recess having a lateral opening of proper size to admit the tie-rod, but not the head, and also having a seat, *c'*, for the heads *a'*, such that the heads cannot be removed laterally therefrom, substantially as described.

3. The shoes *g*, having grooves which are closed at their outer ends, as shown at *s s'*, and also each having a lug, *g'*, in combination with holders *b*, each provided with a rotating hook, *h*, substantially as described.

4. The lug *c'*, on the rear face of the shoe, suitably arranged to enter the recess *c* and hold the lower end or eye of the hanger in place, substantially as described.

5. The hanger *m*, having a connection at or from its lower end to the middle of the brake-bar, and at its upper end being connected to a spring which leads from a fixed part of the truck or car, substantially as and for the purposes set forth.

6. The clamp device, consisting of a band, *v*, and block *r*, arranged in combination with the tie and brace rod or rods of a truss brake-bar, substantially as set forth.

In testimony whereof I, the said GEORGE WESTINGHOUSE, Jr., have hereunto set my hand.

GEO. WESTINGHOUSE, JR.

Witnesses:
G. H. CHRISTY,
A. S. NICHOLSON.