(12) INTERNATIONAL APPLICATION PUBLISHED UNDER THE PATENT COOPERATION TREATY (PCT)

(19) World Intellectual Property Organization
International Bureau

(43) International Publication Date
8 April 2004 (08.04.2004)

PCT

(10) International Publication Number
WO 2004/029889 A1

(51) International Patent Classification[7]: G07F 7/10

(21) International Application Number:
PCT/GB2003/004225

(22) International Filing Date:
29 September 2003 (29.09.2003)

(25) Filing Language: English

(26) Publication Language: English

(30) Priority Data:
0222517.5 27 September 2002 (27.09.2002) GB

(71) Applicant *(for all designated States except US)*: **NEXUS CORPORATION S.A.** [CH/CH]; Rue du Rhone 14, CH-1204 Geneva (CH).

(72) Inventors; and

(75) Inventors/Applicants *(for US only)*: **RHIANDO, Maxwell, Earl** [GB/GB]; Broomstone House, Beech Avenue, Camberley, Surrey GU15 2JT (GB). **RHIANDO, Neil, Maxwell** [GB/GB]; Broomstone House, Beech Avenue, Camberley, Surrey GU15 2JT (GB).

(74) Agents: **SMITH, Norman, Ian** et al.; FJ Cleveland, 40-43 Chancery Lane, London WC2A 1JQ (GB).

(81) Designated States *(national)*: AE, AG, AL, AM, AT, AU, AZ, BA, BB, BG, BR, BY, BZ, CA, CH, CN, CO, CR, CU, CZ, DE, DK, DM, DZ, EC, EE, EG, ES, FI, GB, GD, GE, GH, GM, HR, HU, ID, IL, IN, IS, JP, KE, KG, KP, KR, KZ, LC, LK, LR, LS, LT, LU, LV, MA, MD, MG, MK, MN, MW, MX, MZ, NI, NO, NZ, OM, PG, PH, PL, PT, RO, RU, SC, SD, SE, SG, SK, SL, SY, TJ, TM, TN, TR, TT, TZ, UA, UG, US, UZ, VC, VN, YU, ZA, ZM, ZW.

(84) Designated States *(regional)*: ARIPO patent (GH, GM, KE, LS, MW, MZ, SD, SL, SZ, TZ, UG, ZM, ZW), Eurasian patent (AM, AZ, BY, KG, KZ, MD, RU, TJ, TM), European patent (AT, BE, BG, CH, CY, CZ, DE, DK, EE, ES, FI, FR, GB, GR, HU, IE, IT, LU, MC, NL, PT, RO, SE, SI, SK, TR), OAPI patent (BF, BJ, CF, CG, CI, CM, GA, GN, GQ, GW, ML, MR, NE, SN, TD, TG).

Declaration under Rule 4.17:

— *as to applicant's entitlement to apply for and be granted a patent (Rule 4.17(ii)) for the following designations AE, AG, AL, AM, AT, AU, AZ, BA, BB, BG, BR, BY, BZ, CA, CH,*

[Continued on next page]

(54) Title: IDENTIFICATION SYSTEM

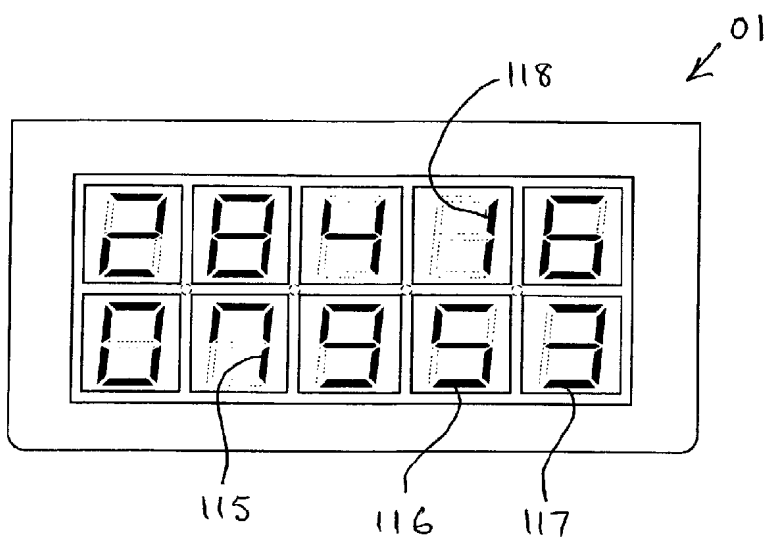

(57) Abstract: A card-based identification system includes one or more terminals (40) which can communicate with a database in a server. Each terminal can receive a card and includes computing means which can generate an impersonal card identifier. The terminal includes an input device (20) which can be operated by a user to input a group of characters known only to a user. The input device includes a plurality of zones (27) each of which is operable by a user to input a character. The zones are arranged so that character with which each zone is associated changes randomly each time a card is received. Also the zones (27) are arranged so that characters with which they are associated are visible only within a restricted viewing angle. The terminal creates an impersonal user identifier from the input characters and these are transmitted with the impersonal card identifier to the database for recording or comparison with stored data. The transmitted data is preferably in numeric form.

WO 2004/029889 A1

CN, CO, CR, CU, CZ, DE, DK, DM, DZ, EC, EE, EG, ES, FI, GB, GD, GE, GH, GM, HR, HU, ID, IL, IN, IS, JP, KE, KG, KP, KR, KZ, LC, LK, LR, LS, LT, LU, LV, MA, MD, MG, MK, MN, MW, MX, MZ, NI, NO, NZ, OM, PG, PH, PL, PT, RO, RU, SC, SD, SE, SG, SK, SL, SY, TJ, TM, TN, TR, TT, TZ, UA, UG, UZ, VC, VN, YU, ZA, ZM, ZW, ARIPO patent (GH, GM, KE, LS, MW, MZ, SD, SL, SZ, TZ, UG, ZM, ZW), Eurasian patent (AM, AZ, BY, KG, KZ, MD, RU, TJ, TM), European patent (AT, BE, BG, CH, CY, CZ, DE, DK, EE, ES, FI, FR, GB, GR, HU, IE, IT, LU, MC, NL, PT, RO, SE, SI, SK, TR), OAPI patent (BF, BJ, CF, CG, CI, CM, GA, GN, GQ, GW, ML, MR, NE, SN, TD, TG)

Published:

— *with international search report*

— *before the expiration of the time limit for amending the claims and to be republished in the event of receipt of amendments*

For two-letter codes and other abbreviations, refer to the "Guidance Notes on Codes and Abbreviations" appearing at the beginning of each regular issue of the PCT Gazette.

IDENTIFICATION SYSTEM

The invention relates to an identification system for originating a set of impersonal identifiers at a computer terminal and recording the set of impersonal identifiers at a card-type server to execute an anonymous registration before a security card or payment card is issued, and separately, for generating a set of impersonal identifiers at a computer terminal and matching the set of impersonal identifiers at the card-type server to execute an anonymous validation after the security card or payment card is issued. Each computer terminal is installed at a separate location with a designated two-way communication identifier.

The word "card" is hereinafter used in the description to include any kind of document such as a licence, passport or identity card for use at an airport check-in, and such as a voucher, ticket or credit card for use at a retail check-out. The identification system therefore has diverse uses in the public sectors for identification purposes and in the private sectors for transaction purposes in any country to provide an identification system for universal use with point-of-origin identification.

The expression "counterpart card" is hereinafter used in the description to include any kind of document such as an application form or membership form for point-of-origin registration and may include personal information for storing personal records at the data centre of a card-issuer only.

The identification system is intended for card-issuers such as government agencies and commercial companies in every country to provide a global platform for creating and locating card-type records in national databases without reference to individual persons, in that the card-type records are impersonal for anonymous registration and anonymous validation. As a consequence, all cards are segregated into card groups and each card group consists of discrete card-types, which can display the name and emblem of different card-issuers to distinguish the difference between the discrete card-types in each card group. For example, one card-type displays the name of one card-issuer.

Accordingly, the individual cards for a discrete card-type are produced with the same card-type code to identify the card-issuer and country of origin for a computer terminal to receive and identify individual cards in the unissued state or issued state for the discrete card-type. The number of individual cards for each

discrete card-type and therefore the number of card-type records in the database of each card-type server extend to an order of magnitude.

Security cards for identification use and payment cards for transaction use are known and are described in prior art as cards with personal identifiers which are referred to herein as the personal card category, and cards without personal identifiers which are referred to herein as the impersonal card category.

Personal card category: Personal cards are described in well established prior art for at least 40-years and it is acknowledged that personal cards are used for executing transactions at a terminal using personal identifiers such as a signature, password or personal identity number (PIN) which are known to the authorised user.

The main advantage of this card category is that personal cards have been in use for at least 40-years and are therefore accepted as a payment system for the purchase of products and services in retail outlets worldwide.

The main disadvantage of this card category is that the personal identifiers of the cardholder are displayed or carried on the card for counterfeiters and fraudsters to replicate and reproduce to obtain goods and services of value by deception in a store or by phone. Personal cards display personal identifiers such as a photograph, signature, fingerprint, name and account number of the cardholder. Furthermore, this card category includes personal details on magnetic strips (swipe cards) or in electronic chips (smart cards) which can be erased, altered or copied for a fraudster to use the identity or account of another person.

Impersonal card category: Impersonal cards are described in the International Application Number WO99/36889 which relates to a transaction system and it is acknowledged that impersonal cards are used for executing transactions at a terminal using an impersonal card-identifier and impersonal user-identifier for a card-type registration and card-type validation. One aspect of this application describes a terminal using a reciprocating printer for writing a card-identifier and using a biometric sensor to capture a live-scan image of a fingerprint for the user-identifier.

The main advantage of this card category is that no personal identifiers of the cardholder are displayed or carried on the card, therefore no reference to an individual person exists on an impersonal card for fraudulent use by an unauthorised person. Furthermore, this card category incorporates thermal panels

instead of magnetic strips and electronic chips for printing permanent information thereon which cannot be altered or erased.

The main disadvantage of this card category is that the terminals described in the prior art for impersonal cards cannot be used for personal cards. It is therefore desirable to use the terminals in the present invention for both card categories by adapting personal cards for impersonal use without reference to the personal identifiers displayed or carried on personal cards. The identification system therefore includes integral means for discrete card-types which include or exclude personal identifiers as one of the preferred embodiments.

The present invention relates to an identification system for discrete card-types with integral means to receive and identify individual cards for a discrete card-type in any computer terminal to perform the following two primary functions:

(A) to originate a set of impersonal identifiers for an anonymous registration.

(B) to generate a set of impersonal identifiers for an anonymous validation.

The computer terminal may vary in type and size to perform the two primary functions **(A+B)** or perform one of the primary functions **(A)** or **(B).** Consequently, at least three types of computer terminal may be used at the same time to perform the said primary functions for discrete card-types with network compatibility. Two types of computer terminal are herein described, by way of example, with different modes of operation by selecting a combination of devices with integral means for operating in an arranged order to perform the primary functions **(A+B)** and the primary function **(B).**

The computer terminal which performs the primary functions **(A+B)** incorporates the following referenced device operations which are preferred embodiments described in the present invention.

A1) Computer means to originate an impersonal card-identifier and encrypt into a registration code and write encoded data and ancillary data for a card in the unissued state.

A2) Guide means to receive and identify a card in the unissued state, capture a first image on the card to decode and decrypt in a computer, and receive encoded data for printing on the card to capture a second image to decode and

decrypt in a computer, and write discrete data carried and concealed within the card.

A3) Display means to output selective commands from the computer to operate the terminal.

A4) Keyboard means to input selective commands to the computer to operate the terminal.

A5) Sensor means to receive concealed data for input to the computer to encrypt and originate an impersonal user-identifier.

A6) Modem means to transmit impersonal identifiers and receive instruction identifiers for a card in the unissued state.

B1) Computer means to decode a symbology and decrypt a registration code to generate an impersonal card-identifier for a card in the issued state.

B2) Guide means to receive and identify a card in the issued state, capture a first image on the card to decode and decrypt in a computer, and read discrete data carried and concealed within the card.

B3) Display means to output selective commands from the computer to operate the terminal.

B4) Keyboard means to input selective commands to the computer to operate the terminal.

B5) Sensor means to receive concealed data for input to the computer to encrypt and generate an impersonal user-identifier.

B6) Modem means to transmit impersonal identifiers and receive instruction identifiers for a card in the issued state.

The computer terminal which performs the primary function **(B)** incorporates the following referenced device operations which are also preferred embodiments described in the present invention. In this example, three modes of operation have been selected for this type of computer terminal described herein.

B1) Computer means to decode a symbology and decrypt a registration code to generate an impersonal card-identifier for a card in the issued state.

B2) Guide means to receive and identify a card in the issued state, capture a first image on the card to decode and decrypt in a computer, and read discrete data carried and concealed within the card.

B5) Sensor means to receive concealed data for input to the computer to encrypt and generate an impersonal user-identifier.

The present invention can include an identification system for discrete card-types with network compatibility between at least one computer terminal and at least one card-type server, using a telecommunications infrastructure such as a public or private telephone network for routing each set of impersonal identifiers including a two-way communication identifier to identify a terminal location and a server location and address each set of impersonal identifiers for a card-type, to create a card-type record or locate a card-type record in the database of the same card-type server for the same card-issuer.

The present invention can use sets of numeric data for the sequence groups numbered 01 to 06 for a computer terminal 80 and using sets of numeric data for the sequence groups 07 to 10 for a computer terminal **140** and host computer **147**, wherein each sequence group is a preferred embodiment to describe a method of performing the primary functions (**A**) and (**B**) in conjunction with the said device operations **A1** to **A6** and **B1** to **B6**.

It will be understood that the described examples for each sequence group consists of numeric combinations, which are divided into numeric groups to form numeric constants for recording an original set of numeric data in a card-type server for an anonymous registration and for matching a duplicate set of numeric data in a card-type server for an anonymous validation. It will be further understood that it is impossible to decipher a numeric combination, the arrangement of numerals are not message data. It is simply a number (E.G. 72-digits) and each digit has a concealed order and value. A numeric combination is herein defined as a constant set of numeric data for recording or matching a set of impersonal identifiers in a card-type server without reference to an individual person.

The present invention is therefore dedicated to the construction of a set of numeric data to perform the primary functions (**A**) or (**B**) characterised in that the computer terminals and card-type servers transmit and receive impersonal information in numeric form and not in message form for the two-way routing of numeric data from any terminal location to any server location without reference to an individual person.

Accordingly, a first aspect of the present invention comprises an identification system to originate a set of impersonal identifiers for an unissued

card-type in a computer terminal and for recording at a card-type server, wherein the system comprises;

a) a terminal which incorporates a guide to receive and identify a card in the unissued state, and to capture a first image for input to a computer to decode and decrypt, and for the computer to originate an impersonal card-identifier and encrypt into a registration code for encoding and printing on the card, and to capture a second image on the card for input to the computer to decode and decrypt, and

b) the terminal incorporates a sensor with touch zones for illuminating an arrangement of segments in each touch zone to display within a restricted viewing angle a random order of characters for a user to enter a concealed group of characters in a selected order for input to the computer to encrypt and originate an impersonal user-identifier in the terminal, and

c) the terminal incorporates a modem to transmit a set of impersonal identifiers to create a card-type record in the database of a card-type server for recording the set of impersonal identifiers to sanction an anonymous registration, and to receive a set of instruction identifiers at the terminal to accept the card and user.

A second aspect of the present invention comprises an identification system to generate a set of impersonal identifiers for an issued card-type in a computer terminal and for matching at a card-type server, wherein the system comprises;

a) a terminal which incorporates a guide to receive and identify a card in the issued state, and to capture a first image on the card for input to a computer to decode and decrypt to generate an impersonal card-identifier in the terminal, and

b) the terminal incorporates a sensor with touch zones for illuminating an arrangement of segments in each touch zone to display within a restrictive viewing angle a random order of characters for a user to enter a concealed group of characters in a selected order for input to the computer to encrypt and generate an impersonal user-identifier in the terminal, and

c) the terminal incorporates a modem to transmit a set of impersonal identifiers to locate a card-type record in the database of a card-type server for matching the set of impersonal identifiers to sanction an anonymous validation,

and to receive a set of instruction identifiers at the terminal to accept the card and the user.

A third aspect of the present invention comprises an identification system in which a computer terminal communicates with an external camera to receive discrete data when an unissued card-type is inserted in said terminal, and to originate a set of impersonal identifiers for an unissued card-type in the said terminal and for recording at a card-type server, wherein the system comprises:

a) a terminal which incorporates a guide to receive and identify an impersonal card in the unissued state, and to capture a first image on the card for input to a computer to decode and decrypt, and for the computer to originate an impersonal card-identifier and encrypt into a registration code for encoding and printing on the card, and to capture a second image on the card for input to the computer to decode and decrypt, and to energise an integrated circuit concealed in the card for writing the said discrete data to the integrated circuit, and

b) the terminal incorporates a sensor with touch zones for illuminating an arrangement of segments in each touch zone to display within a restricted viewing angle a random order of numerals for a user to enter a concealed group of numerals in a selected order for input to the computer to encrypt and originate an impersonal user-identifier in the terminal, and

c) the terminal incorporates a modem to transmit a set of impersonal identifiers to create a card-type record in the database of a card-type server for recording the set of impersonal identifiers to sanction an anonymous registration, and to receive a set of instruction identifiers at the terminal to accept the card and user.

A fourth aspect of the present invention comprises an identification system in which a computer terminal communicates with an external screen to display discrete data when an issued card-type is inserted in said terminal, and to generate a set of impersonal identifiers for the issued card-type in said terminal and for matching at a card-type server, wherein the system comprises:

a) a terminal which incorporates a guide to receive and identify an impersonal card in the issued state, and to capture a first image on the card for input to a computer to decode and decrypt to generate an impersonal card-identifier in the terminal, and to energise an integrated circuit concealed in the card for reading the said discrete data on the integrated circuit, and

b) the terminal incorporates a sensor with touch zones for illuminating an arrangement of segments in each touch zone to display within a restrictive viewing angle a random order of numerals for a user to enter a concealed group of numerals in a selected order for input to the computer to encrypt and generate an impersonal user-identifier in the terminal, and

c) the terminal incorporates a modem to transmit a set of impersonal identifiers to locate a card-type record in the database of a card-type server for matching the set of impersonal identifiers to sanction an anonymous validation, and to receive a set of instruction identifiers at the terminal to accept the card and user

A fifth aspect of the present invention comprises an identification system for generating a set of impersonal identifiers for an issued card-type in a computer terminal connected to a host computer for matching at a card-type server, wherein the system comprises;

a) a terminal which incorporates a guide to receive and identify an impersonal card in the issued state, and to capture a first image on the card for input to a computer to decode and decrypt to generate an impersonal card-identifier in the terminal, and

b) the terminal incorporates a sensor with touch zones for illuminating an arrangement of segments in each touch zone to display within a restrictive viewing angle a random order of characters for a user to enter a concealed group of characters in a selected order for input to the computer to encrypt and generate an impersonal user-identifier in the terminal, and

c) the terminal transfers the impersonal card-identifier and impersonal user-identifier to a host computer, and

d) the host computer incorporates a modem to transmit a set of impersonal identifiers to locate a card-type record in the database of a card-type server for matching the set of impersonal identifiers to sanction an anonymous validation, and to receive a set of instruction identifiers at the host computer to accept the card and the user.

A sixth aspect of the present invention comprises an identification system in which a network of computer terminals and a network of card-type servers form separate communication networks for discrete card-types, and wherein each network includes integral means for originating impersonal identifiers at any

computer terminal and recording impersonal identifiers at the card-type server, and wherein the integral means for originating and recording a set of impersonal identifiers for an unissued card-type comprises;

a) means to receive and identify a card-type in the unissued state in a terminal;

b) means to write discrete data to an integrated circuit concealed within the card in the terminal;

c) means to originate an impersonal card-identifier for the card in the terminal;

d) means to originate an encrypted registration code for encoding and printing on the card in the terminal;

e) means to input a group of numerals and originate an impersonal user-identifier for the card in the terminal;

f) means to transmit a set of impersonal identifiers for the card-type to a card-type server;

g) means to create a card-type record in the database of the card-type server for recording the set of impersonal identifiers to sanction the anonymous registration, and

g) means to transmit a set of instruction identifiers to the terminal to accept the card and the user.

A seventh aspect of the present invention comprises an identification system in which a network of computer terminals and a network of card-type servers form separate communication networks for discrete card-types, and wherein each network includes integral means for generating impersonal identifiers at any computer terminal and matching impersonal identifiers at the card-type server, and wherein the integral means for generating and matching a set of impersonal identifiers for an issued card-type comprises;

a) means to receive and identify a card-type in the issued state in a terminal;

b) means to read discrete data on an integrated circuit concealed within the card in the terminal;

c) means to decode and decrypt a registration code on the card to generate an impersonal card-identifier in the terminal;

d) means to input a group of numerals and generate an impersonal user-identifier for the card in the terminal;

e) means to transmit a set of impersonal identifiers for the card-type to a card-type server;

f) means to locate a card-type record in the database of the card-type server for matching the set of impersonal identifiers to sanction the anonymous validation, and

g) means to transmit a set of instruction identifiers to the terminal to accept the card and the user

An eighth aspect of the present invention comprises an identification system, wherein a security centre transmits a two-way communication identifier for each terminal location and each server location to a router centre to provide network interconnection and to download the communication identifiers together with encryption codes to each computer terminal and each card-type server for routing encrypted impersonal identifiers and instruction identifiers between the designated locations, and for the security centre to communicate through the router centre for monitoring and up-grading each computer terminal at its designated location.

A ninth aspect of the present invention comprises an identification system in which each set of impersonal identifiers and each set of instruction identifiers for a discrete card-type includes a two-way communication identifier to identify the terminal location and server location, and address each set of impersonal identifiers and instruction identifiers to create a card-type record in the database of a card-type server for anonymous registration at a data centre, or to locate a card-type record in the database of the same card-type for anonymous validation at the data centre.

A tenth aspect of the present invention comprises an identification system with separate data centres to provide demarcation and anonymity for the transfer of compiled data from a data centre with impersonal records to a data centre with personal records, wherein the data centre with impersonal records includes a card-type server for matching a set of impersonal identifiers in a card-type record to compile data to validate an identification or transaction at the data centre, and transfer the compiled data to the data centre of a discrete card-issuer with personal records, the compiled data is impersonal and includes a reference

number and activity record for the card-issuer to enter the compiled data in a personal record with the same reference number.

The present invention will now be described, by way of example, with reference to the accompanying diagrammatic drawings, in which:

Figure **01** shows a plan view of a sensor device with ten discrete touch zones for selecting a group of illuminated numerals in each touch zone.

Figure **02** shows a side elevation of view X-X in cross section, of the sensor device in figure 01.

Figure **03** shows a plan view variant of the sensor device in figure 01 with nine discrete touch zones.

Figure **04** shows another plan view variant of the sensor device in figure 01 with twelve discrete touch zones.

Figure **05** shows a plan view of another sensor device with a touch screen and liquid crystal display for selecting readable characters in defined touch zones.

Figure **06** shows a side elevation of view X-X in part cross section, of the sensor device in figure 05.

Figure **07** shows a side view, in part cross section, of a guide device for use with a chip reader/writer and a scanner at a 1st-stop position and for use with a printer at a 2nd-stop position.

Figure **08** shows the plan view of a computer terminal for originating a set of impersonal identifiers for anonymous registration, and for generating a set of impersonal identifiers for anonymous validation.

Figure **09** shows a communication network for gateway routing impersonal identifiers and instruction identifiers between a computer terminal shown in figure 08 and a card-type server for anonymous registrations, and gateway routing impersonal identifiers and instruction identifiers between a computer terminal in figure 08 and a card-type server for anonymous validations.

Figure **10** shows an impersonal card and counterpart card in the unissued state for originating an impersonal card-identifier at a computer terminal and recording in a card-type server for an anonymous registration.

Figure **11** shows the impersonal card of figure 10 with a concealed integrated circuit and with impersonal encoded data printed in the thermal coded area and impersonal ancillary data printed in the thermal panel area.

Figure **12** shows the plan view of the sensor device with an illuminated numeral in each touch zone for originating an impersonal user-identifier at a computer terminal and recording in a card-type server for an anonymous registration.

Figure **13** shows an impersonal card in the issued state and valid state for generating an impersonal card-identifier at a computer terminal and matching in a card-type server for an anonymous validation.

Figure **14** shows the plan view of the sensor device with an illuminated numeral in each touch zone for generating an impersonal user-identifier at a computer terminal and matching in a card-type server for an anonymous validation.

Figure **15** shows a personal card in the unissued state for originating an impersonal card-identifier at a computer terminal and recording in a card-type server for anonymous registration.

Figure **16** shows the personal card of figure 15 with an exposed integrated circuit and with impersonal encoded data printed in the thermal coded area.

Figure **17** shows the plan view of the sensor device with an illuminated numeral in each touch zone for originating an impersonal user-identifier at a computer terminal and recording in a card-type server for an anonymous registration.

Figure **18** shows a personal card in the issued state and valid state for generating an impersonal card-identifier at a computer terminal and matching in a card-type server for an anonymous validation.

Figure **19** shows the plan view of the sensor device with an illuminated numeral in each touch zone for generating an impersonal user-identifier at a computer terminal and matching in a card-type server for an anonymous validation.

Figure **20** shows the plan view of a computer terminal which communicates with a host computer for generating a set of impersonal identifiers for an anonymous validation.

Figure **21** shows a side elevation of view Y-Y in cross section, of a guide means for use with a chip reader/writer and a scanner at a 1st-stop position in the computer terminal shown in figure 20.

Figure **22** shows a communication network for internet routing impersonal identifiers and instruction identifiers between a computer terminal shown in figure 20 connected to a host computer, and a card-type server for anonymous validations.

Figures 01 and 02 show a sensor device **01** mounted to a terminal casing **85**. The sensor device **01** includes a moulded fascia **03** with a recessed surround **04** to support and locate a moulded grid **05** with discrete open areas to define ten touch zones **06** for selectively placing a finger or object in any touch zone **06** to make contact with a touch screen **07** underneath the moulded grid **05** to locate the position of the finger or object on the active area of the touch screen **07**.

The touch screen **07** includes spaced apart passive areas indicated at reference **08** within the active area on the touch screen **07**. The moulded grid **05** includes grid spacers **08** which rest on the said passive areas to prevent the moulded grid **05** resting on the active area of the touch screen **07**. The touch screen **07** is a separate assembly for positioning on the underside of the recessed surround **04** which forms part of the moulded fascia **03** of sensor device **01**.

Any known touch screen **07** with electrical sensing means may be used for detecting a finger or object in any touch zone **06** on the sensor device **01**. The touch screen **07** incorporates a printed circuit (not shown) for connection to a socket **18** on a device board **01A** for processing electrical signals received from the active area of the touch screen **07** every time a finger or object touches the surface within any touch zone **06** on the sensor device **01**. Each touch zone **06** includes a vertical and horizontal co-ordinate to locate the position of each touch-zone **06** on the active area of the touch screen **07**. Each touch zone **06** is therefore referenced on finger or object contact by a computer program.

The sensor device **01** also includes a filter element **09** and a spacer element **10** which are positioned underneath the touch screen **07** all of which are of similar surface area for locating in the moulded fascia **03** and held in place by the device board **01A** which is rigidly fixed to the fascia **03** by screw means **16** and **17** as shown in figure 02.

The filter element **09** comprises a plurality of cavities in columnated formation and constructed of micro fine material, through which an illuminated character on each display element **13** is visible through the filter **09** and touch screen **07** when viewed directly in front of the sensor device **01**, and is not visible

when viewed from any side of the sensor device **01**. The filter **09** therefore restricts the viewing angle on the sensor device **01** when used for selecting a concealed group of numerals in a public place such as an airport check-in and retail check-out or a cash-point for dispensing currency notes and coins.

The filter **09** may also be constructed in two parts to provide a sheet layer and cavity layer for positioning in the fascia **03** to restrict the viewing angle. The sheet layer may be coloured with optical clarity and the cavity layer may consist of any geometric formation in which the depth and width of each cavity may be adjusted to restrict the viewing angle to a greater or lesser degree for character recognition to select a concealed group of numerals on the sensor device **01**. The filter element **09** may also be constructed of two sheet layers and each layer contains spaced apart vertical slats to form a filter element **09** with a restricted viewing angle from each side when the two layers are orientated at 90 degrees to each other. A coloured sheet layer may be placed above or below the two slatted sheet layers to provide a three layer filter element **09**.

The spacer element **10** is fixed to the control board **12** using screws **11**. Separate apertures are incorporated in the spacer **10** for each display element **13** to be inserted so that the top face of each display element **13** is level with the top face of the spacer **10** to form a level surface with a two row and five column configuration of display elements **13** which are spaced apart for positioning the centre of each display element **13** in the centre of each touch zone **06** as shown in figures 1 and 2.

The device board **01A** includes a printed circuit (not shown) for mounting thereon the discrete elements **13**, each of which has contacts **14** for soldering to the printed circuit for independent electrical operation. Each display element **13** incorporates light emitting diodes for illuminating discrete segments **15** to display individual characters in each touch zone **06**.

Each display element **13** may use any light source to illuminate discrete segment patterns or dot-matrix patterns in a variety of arrangements providing the arrangement of patterns can be replicated on each display element **13** in each touch zone **06** forming an interchangeable arrangement for character recognition to select a concealed group of numerals for an impersonal user-identifier on the sensor device **01**. The arrangement of seven segments **15** shown in figure 01 is capable of illuminating ten different numerals on each display element **13** to

display a variable numeral from zero to nine in each touch zone **06**. This example is used hereinafter in the description for all figures.

The sensor device **01** includes control means to energise and de-energise the display elements **13** underneath the active area of each touch zone **06** every time a concealed group of numerals for an impersonal user-identifier are selected on the sensor device **01** by an individual user. Each touch zone **06** in the de-energised state is blank before and after the said group of numerals are selected, and each touch zone **06** in the energised state displays the ten concealed numerals in a random order to select the said group of numerals. The control means de-energises the display elements **13** each time the last numeral of the said group of numbers is selected by each and every individual user.

The sensor device **01** is intended for concealed use particularly in a public place and the position of each numeral on the sensor device **01** changes when the illuminated discrete segments **15** on each display element **13** are energised to illuminate a variable numeral in each touch zone **06** for selecting a concealed group of numerals within a restricted viewing angle by each individual user. Conventional key-pads use individual numbered key-switches which are arranged in a fixed numbered order on the key-pad for selecting a group of numbers in known positions. Each numbered key is visible for selecting a number in the known position on the key-pad for repeated use. By contrast in the present arrangement the position of each numeral on the sensor device **01** is unknown until the discrete segments **15** are energised to display an illuminated numeral in each of the touch zones **06** with an X and Y coordinate.

The device board **01A** also includes a power and data socket **18** for the touch screen **07** to communicate with the device board **01A** for processing the electrical signals received from the active area on the touch screen **07**, and includes a power and data socket **19** for the device board **01A** to communicate with a computer control board (not shown) for data transfer, and connecting a power supply to operate the display elements **13** and the touch screen **07**. Associated electrical components (not shown) therefore form part of the printed circuit on the device board **01A** and include integrated circuit components (not shown) for configuring and calibrating each touch zone **06** to operate the sensor device **01** controlled by computer programs for selecting a group of numerals to originate or generate impersonal user-identifiers for discrete card-types.

The sensor device **01** may also be constructed using display elements **13** made with liquid crystals and light emitting compounds for selecting a concealed group of characters in each touch zone **06** which may be stored in memory for generating array patterns with diverse arrangements in monochrome or colour.

In operation, the arrangement of illuminated discrete segments **15** shown in each display element **13** change order each time an individual card is inserted in a computer terminal for selecting a concealed group of numerals on the sensor device **01** to originate an impersonal user-identifier for recording in a card-type server. The same individual card is inserted again for selecting the same concealed group of numerals on the sensor device **01** to generate the same impersonal user-identifier for matching in the same card-type server.

The advantage of selecting a group of numerals located in different touch zones **06** with a restricted viewing angle, provides a concealed method for individual users to enter a group of numerals in selected order to originate or generate impersonal user-identifiers in the terminal for discrete card-types on the sensor device **01** in a public place.

The sensor device **01** is intended for use with individual cards as described herein, whereby an impersonal site-identifier, impersonal card-identifier and impersonal user-identifier combine to form a set of impersonal identifiers for a card and user without reference to an individual person in a computer terminal. Alternatively, the sensor device **01** may be used for entering a concealed user-identifier, as an independent device for fitting to alternative types of computers and peripherals known per se. In this example, the sensor device **01** is used for selecting a concealed group of numerals to generate an impersonal user-identifier for matching in a terminal or a peripheral, which stores an original for comparison.

Figures 03 and 04 show different layouts for the touch zones **06** on the sensor **01**, in which figure 03 shows nine touch zones **06** arranged in a three row and three column configuration and in which figure 04 shows twelve touch zones **06** arranged in a three row and four column configuration. Many configurations can be constructed as described for the sensor device **01** in figure 01 and 02.

Figures 05 and 06 show a sensor device **20** of different construction which is mounted to a terminal casing **85**. The sensor device **20** includes a moulded fascia **22** with an open area **23** and surrounding ledge **24** for locating a touch screen **25**, a filter element **28** and a display panel **29** of similar surface area

against the underside of the surrounding edge **24** which forms part of the moulded fascia **22** for sensor **20**.

The touch screen **25** incorporates a register grid **26** to define nine touch zones **27** within the open area **23** for selectively placing a finger or object in any touch zone **27** to locate the position of the finger or object on the active area of the touch screen **25** of sensor device **20**. The register grid **26** may therefore be printed on the underside of the touch screen **25** which is visible on the upper side of the touch screen **25**. Alternatively, the register grid **26** may be incorporated in the filter element **28** to define the touch zones **27**.

Any known touch screen **25** with electrical sensing means may be used for detecting a finger or object in any touch zone **27** on the sensor device **20**. The touch screen **25** incorporates a printed circuit (not shown) for connection to a device board **20A** for processing electrical signals received from the touch screen **25,** every time a finger or object touches the surface within any touch zone **27** on the sensor device **20**. Each touch zone **27** includes a vertical and horizontal co-ordinate to locate the position of each touch zone **27** on the active area of the touch screen **25**. Each touch zone **27** is therefore referenced on finger or object contact by a computer program.

Any known display panel **29** capable of generating graphic images may be used, for example, passive or active matrix displays incorporating liquid crystals, vacuum fluorescent displays, pixel array displays or other visual display devices which are substantially constructed as a flat panel. The display panel **29** may also be incorporated within a larger screen such as the monitor screen in any automated teller machine (cash point) for displaying graphic images on a portion of the monitor screen which has touch screen functionality for selecting separate graphic images on the built-in sensor device **20** of the monitor screen. The display panel **29** and touch screen **25** are preferably constructed as an integral unit and may incorporate the filter element **28** to restrict the viewing angle on the sensor device **20** as previously described for the sensor device **01**.

The display panel **29** in figure 05 consists of nine touch zones **27** in a typical three row and three column configuration, and shows the outline pattern of seven discrete segments **30** to indicate the position of a graphic image in each touch zone **27** for displaying a variable numeral from zero to nine in the centre of each touch zone **27** defined by the register grid **26**. The discrete segments **30** are

only visible to the individual user on activating the display panel **29** for character recognition through the filter element **28** and touch screen **25** using control means to energise and de-energise the liquid crystals which form the discrete segments **30** for selecting a concealed group of numerals on the sensor device **20** in each touch zone **27.** The control means for the discrete segments **30** in figure 05 and the discrete segments **15** in figure 01 are similar in operation as previously described.

The graphic images displayed on the display panel **29** are not limited to an arrangement of segments or dot matrix patterns. Other arrangements may include bitmaps and vector images in the form of monochrome or colour pictures and symbols forming an interchangeable arrangement for image recognition to select a concealed group of graphic images on the sensor device **20**. The graphic images are stored in memory for displaying in each touch zone **27** to form an arrangement for a specific card-type which may exceed the number of touch zones **27**.

The device board **20A** is a circuit connected to the display panel **29** and is shown fixed to the fascia **22** using four screws **32** and **33** to abut and fix the display panel **29**, filter element **28** and touch screen **25** against the surrounding ledge **24** of the fascia **22**. The device board **20A** includes a printed circuit (not shown) and a power and data socket **34** for the device board **20A** to communicate with a computer control board (not shown) for transferring processed data, and for connecting a power supply to operate the display panel **29** and the touch screen **25**. Associated electrical components (not shown) therefore form part of the printed circuit on the device board **20A** and include integrated circuit components (not shown) for configuring and calibrating each touch zone **27** to operate the sensor device **20** controlled by computer programs for selecting a concealed group of images for different card-types.

In operation, the arrangement of illuminated discrete segments **30** shown for selecting a numeral in each touch zone **27** on the sensor device **20,** change each time an individual card is inserted in a computer terminal for selecting a concealed group of numerals on the sensor device **20** to originate an impersonal user-identifier for recording in a card-type server. The same individual card is inserted again for selecting the same concealed group of numerals on the sensor device **20** to generate the same impersonal user-identifier for matching in the same card-type server.

The advantage of selecting a group of numerals located in different touch zones **27** with a restricted viewing angle provides a concealed method for individual users to enter a group of numerals in selected order to originate or generate impersonal user-identifiers in the terminal for discrete card-types on the sensor device **20** in a public place.

The sensor device **20** is intended for use with individual cards as described herein, whereby an impersonal site-identifier, impersonal card-identifier and impersonal user-identifier combine to form a set of impersonal identifiers for a card and user without reference to an individual person in a computer terminal. Alternatively, the sensor device **20** may be used for entering a concealed user-identifier, as an independent device for fitting to alternative types of computers and peripherals known per se. In this example, the sensor device **20** is used for selecting a concealed group of numerals to generate an impersonal user-identifier for matching in a terminal or a peripheral, which stores an original for comparison.

Figure 07 shows a guide device **40** mounted inside a terminal casing **85** with an external and detachable card-slot **41** to receive and identify cards **100**, **120** in the unissued state and cards **100**, **120** in the issued state for discrete card-types. The guide device **40** comprises two side supports **42** which are spaced apart to include guide grooves **43** in vertical alignment and engagement with each end of the transverse card-slot **41** to allow a card width to pass between the side supports **42** with each card edge retained in each guide groove **43** to a 1st-stop position **44** and to a 2nd-stop position **55**. The side supports **42** are joined together by an upper transverse beam **45** and by a lower transverse beam **56** to provide a rigid structure for the guide device **40**.

At the 1st-stop position **44**, a switch **46** and device board **46A** is shown and a light emitter (not shown) is offset mounted on the upper transverse beam **45** and transverse bar **47** to detect a card and illuminate a thermal coded area **105**, **130** defined on the face of the card **100** or **120** and a scanner **48** and device board **48A** is shown offset mounted on a transverse bracket **49** which is screwed to the side supports **42**. A chip reader / writer **53** is shown mounted between the side supports **42** and is offset mounted on the transverse bar **47** in vertical alignment with the integrated circuit **127** concealed in the laminate material **102** for a card **100** or exposed on the laminate material **121** for a card **120**, and is located in close proximity to the face of the card (without contact) at the 1st-stop position **44**.

The chip reader / writer **53** is a transceiver incorporating an antenna to emit a specific frequency radio signal with a defined acquisition range and includes the decoder device board **53A** with power and data cables. These modules are of known type for writing or reading the discrete data **128** on an integrated circuit **127** to provide a read/write module **53** in the guide device **40** of the computer terminal **80** for a card **100** or a card **120**. The discrete data **128** is a facial image.

The guide device **40** includes a drive means **50** controlled by a device board **50A** comprising two transverse drive shafts **50** which are bearing mounted in the side supports **42** and driven by meshed gears and a stepper motor (not shown), all drive parts are mounted on the outside face of each side support **42**. The drive shafts **50** support a pair of pinned nip-rollers **51** which are positioned in the centre of the guide **40** for either inward rotation to transport a card in the descent mode, or outward rotation to transport a card in the ascent mode. The nip-rollers **51** are shown rubber faced **52** for gripping each card face during the descent mode or ascent mode while the card is guided in each groove **43** to maintain vertical alignment.

At the 2nd-stop position **55**, the lower transverse beam **56** is shown with a low friction layer **57** made of yielding material bonded thereon to provide a transverse support across the card width for pressure to be applied evenly on the card face and provide a transverse guide for the card to maintain vertical alignment in each groove **43.** A switch **58** with lever **59** is shown mounted to a centre bracket **60** between two fixed stop plates **61** which are screwed to the lower transverse beam **56** to allow the lower card edge to depress the lever **59** to the level of the stop plates **61** and stop the nip-rollers **51** at the 2nd-stop position **55**.

The guide device **40** includes a printer means **62** controlled by a device board **62A**, comprising a transverse print-head **62** screwed on the front face of a transverse mounting **63** which includes lateral side plates **64** connected by pivot pins **65** to the outside face of each side support **42** for free pivotal movement. A transverse bar **66** is shown screwed to each end of the transverse mounting **63**, and a solenoid **67** is shown positioned underneath the centre of the transverse bar **66** to apply a constant force and press the transverse print-head **62** at a predetermined pressure against the card face, supported by the low friction layer **57** during the ascent mode.

The transverse print-head **62** includes an integral heat-sink **68** and device board **62A** with integrated circuits and cabling for power and data, and a row of micro-fine heating elements **70** as shown indicated, for dot-line printing in the coded area and in the panel area as defined on the front face of all individual cards for any discrete card-type. The guide **40** therefore includes registration datums for the chip reader/writer **53**, the scanner **48** and printer **62** in specific positions determined by the integrated circuit **127** in the laminate material **102, 121** and the thermal coded area **105** and thermal panel area **107** on the card face.

The guide device **40** is intended for individual cards to be manually inserted to the 1st-stop position **44** and manually removed from the 1st-stop position **44** using one card-slot **41**. The guide device **40** has two device operations **A2** and **B2** when individual cards for a discrete card-type are inserted in the card-slot **41** of a computer terminal **80**. The two device operations are now described, by way of example, for a card **100** in the unissued state **(A2)** and a card **100** in the issued state **(B2).**

In the first operation, a card **100** in the unissued state is inserted in the card-slot **41** of the guide device **40** to the 1st-stop position **44**. The switch **46** detects the guided card and activates the scanner **48** to capture a one-code image **106** in the thermal coded area **105** on the card face for a computer device to receive a bitmap of the one-code image **106** to verify the unissued state, and activates the chip reader/writer **53** to energise an integrated circuit **127** concealed in the laminate material of card **100** to receive a facial image from an external camera for writing discrete data **128** in the memory of the integrated circuit **127**. The computer device in the terminal originates an impersonal card-identifier comprising of numeric data and encrypts the data into a registration code **108** and encodes into a symbology for printing encoded data **109** on the thermal coded area **105** of the card face. The computer device also originates ancillary data in the form of characters and symbols for dot-line printing on a thermal panel area **107** adjacent to the thermal coded area **105** on the card face.

The computer device writes the encoded data **109** and ancillary data **111** for the printer means **62** and instructs the drive means in the guide device **40** to activate the nip-rollers **51** for inward rotation to grip the guided card. At the start of the descent mode, the nip-rollers **51** transport the guided card to the 2nd-stop position **55** and stop inward rotation when the guided card depresses the lever **59**

on switch **58** at the 2nd-stop position **55**. The nip-rollers **51** stop momentarily to change to outward rotation for the ascent mode, to transport the guided card to the 1st-stop position **44**.

At the start of the ascent mode, the solenoid **67** is energised to lift and press the print-head **62** against the front face of the guided card for dot-line printing the encoded data **109** in the thermal coded area **105** and for printing the ancillary data **111** in the thermal panel area as defined on the front face of the guided card. The solenoid **67** is de-energised for the print-head **62** to move away from the front face of the guided card caused by the weight of the transverse bar **66** to complete the print cycle during the ascent mode with the printed encoded data **109** displayed as a symbology in the thermal coded area **105** on the card face.

The nip-rollers **51** stop outward rotation when the guided card is at the 1st-stop position **44.** The scanner **48** is activated to capture a two-coded image **110** in the thermal coded area **105** on the card face, for the computer device to receive a bitmap of the two-code image **110** and decode the symbology and decrypt the registration code **108**, to verify that the printed registration code and the original card-identifier are exact copies for outbound transmission from terminal to server to create a card-type record for recording the original card-identifier to sanction an anonymous registration.

In the second operation, a card **100** in the issued state is inserted in the card-slot **41** of the guide device **40** to the 1st-stop position **44**. The switch **46** detects the guided card and activates the scanner **48** to capture a two-code image **110** in the thermal coded area **105** on the card face for the computer device to receive a bitmap of the two-code image **110** to verify the issued state, and activates the chip reader/writer **53** to energise the integrated circuit **127** concealed in the laminate material of card **100** for reading discrete data **128** in the memory of the integrated circuit **127** to display the facial image on an external screen. The computer device decodes the symbology and decrypts the registration code **108** to generate a duplicate card-identifier for outbound transmission from terminal to server to locate the card-type record for matching the duplicate card-identifier to sanction an anonymous validation.

In operation, the guide device **40** provides means to receive and identify cards in the unissued state at the 1st-stop position **44** and printing on cards in the

unissued state at the 2nd-stop position **55** for the device operation **A2** and the guide device **40** provides means to receive and identify cards in the issued state at the 1st-stop position **44** for the device operation **B2**. Therefore, the guide device **40** may comprise of a one-stop cycle or a two-stop cycle for different types of computer terminal.

Figure 08 shows the plan view of a computer terminal **80** for the device operations **A1** to **A6** and **B1** to **B6** as previously referenced for the primary function (**A+B**).

The computer terminal **80** is shown encased by a top face **81**, front face **82**, rear face **83**, side panels **84** and base plate (not shown) to form a terminal casing **85** for supporting the external devices, which include the sensor **01** and device board **01A,** dual display **86** and device boards **86A,** keyboard **87** and device board **87A** and position of the guide device **40** at card-slot **41,** and further includes the power cable **88** and modem cable **89**. The internal devices include the guide device **40** with switch **46** and device board **46A**, scanner **48** and device board **48A**, chip reader/writer **53** and device board **53A**, emitter and device board, drive means **50** and device board **50A** and printer means **62** with device board **62A**, and the computer control board incorporating a modem device (not shown).

The computer control board includes printed circuits for mounting thereon, electrical components and integrated circuit components with circuit connection to the modem device and device boards **01A, 20A, 46A, 48A, 50A, 53A, 62A, 86A, 87A** and emitter board (not shown), which collectively describes a computer device **80** to control the computer sequences (herein described) by computer programs for the device operations **A1** to **A6** and **B1** to **B6**. The computer device **80** further includes associated connector points for internal power and data cables and connector points for the external modem cable **89** and power cable **88** which connects to an external power supply unit (PSU) for electrical mains supply.

The computer device **80** further includes computer programs for compiling numeric combinations to form sets of numeric data for individual site-identifiers, card-identifiers, user-identifiers and date-identifiers for discrete card-types, and includes programs for encrypting and decrypting data and encoding and decoding data referred to herein for card-type codes and registration codes on individual cards for each discrete card-type.

The computer terminal **80** further includes random access memory (RAM) for accessing encryption codes, communication identifiers and also accessing a terminal register for recording and identifying card-type codes to verify the card-issuer on every individual card for identification use or transaction use at the computer terminal **80**.

The computer terminal **80** further includes storage for daily recording of point-of-sale transactions and the printing of daily records for cash or card payments including receipts using peripherals connected to the computer terminal **80**.

The computer terminal **80** further includes modem means which is circuit connected to the computer means for the outbound transmission of numeric data from terminal to server and for the inbound transmission of numeric data from server to terminal to provide two-way communication for data processing impersonal identifiers and instruction identifiers for anonymous registrations and for anonymous validations.

Figure 09 shows a diagrammatic layout of a communication network **90** for gateway routing impersonal identifiers and instruction identifiers for a discrete card-type between a terminal location **91** and a server location **95**. The terminal location **91** is carrier-linked by a transmission line **92** to a router centre **93** and the server location **95** is carrier-linked by a transmission pipe **94** to the router centre **93** to form a basic infrastructure capable of expansion by replication.

The communication network **90** for a discrete card-type is expanded by increasing the number of terminal locations **91** at different site addresses for installing a computer terminal **80** at each terminal location **91**, a typical network of 20,000 computer terminals **80** is envisaged at 20,000 terminal locations **91** and each terminal location **91** has a dedicated transmission line **92** carrier-linked to the router centre **93**. The computer terminal **80** is connected by cable **89** to a junction box for the transmission line **92**.

The communication network **90** for discrete card-types is expanded by increasing the number of server locations **95** at different site addresses for installing a card-type server **96** at each server location **95**, a typical network of 200 card-type servers **96** is envisaged at 200 server locations **95** and each server location **95** has a dedicated transmission pipe **94** carrier-linked to the router centre

93. The card-type server **96** is connected by cable to a junction box for the transmission pipe **94**.

The computer terminal **80** at the site address of each terminal location **91** is identified by a number and the card-type server **96** at the site address of each server location **95** is identified by a number, the two numbers are combined to form a 09-digit number and stored as a two-way communication identifier in each computer terminal **80** for routing a set of impersonal identifiers for a discrete card-type from the computer terminal **80** to the card-type server **96**, and for routing a set of instruction identifiers for the discrete card-type from the card-type server **96** to the computer terminal **80**. The communication identifier consists of a site-identifier for a server location **95** and a site-identifier for a terminal location **91**.

Consequently, each computer terminal **80** can store 200 communication identifiers for 200 card-type servers **96** to form separate communication networks **90** comprising of 200 discrete card-type networks using the same computer terminal **80** at 20,000 terminal locations **91**. A set of impersonal identifiers therefore includes at least, a site-identifier **95**, a card-identifier **97** and a user-identifier **98** for outbound transmission, and a set of instruction identifiers includes at least, a site-identifier **91** and a file-identifier **99** for inbound transmission.

The router centre **93** provides the gateway for routing the volume of transmissions between the terminal locations **91** and the server locations **95**, wherein the transmission line **92** for each terminal location **91** is identified by the terminal number, and the transmission pipe **94** for each server location **95** is identified by the server number for the gateway routing of transmissions.

Each transmission is a two-way communication. The outbound transmission from terminal **80** to server **96** comprises a set of numeric data in an arranged order to represent a set of impersonal identifiers which are transmitted to the server **96** for recording or matching at the server **96**, and the inbound transmission from server **96** to terminal **80** comprises a set of numeric data in an arranged order to represent a set of instruction identifiers which are received at the terminal **80** and processed by the terminal computer to provide an indication as to whether the card and user are valid or invalid for accepting or rejecting at the computer terminal **80** to complete one transmission.

The set of numeric data for an outbound and inbound transmission may vary in file size, for example 200 bytes of data, and therefore each transmission

has a short duration, for example 02-seconds. A communication network **90** comprising of 20,000 terminals **80** and one server **96** for a discrete card-type is carrying millions of transmissions per hour. By increasing the number of servers **96** for discrete card-types, the carrying capacity extends to an order of magnitude which may be replicated in every country for a global platform.

An embodiment of the present invention will now be described with reference to the arrangement of sequences listed below for each numbered group, in which a sequence group is selected to suit the card design for inserting in the guide device **40** to initiate the first sequence in any group. Consequently, the following description for each sequence group refers to receiving and identifying a card in the unissued state and writing discrete data and encoded data in or on the unissued card or receiving and identifying a card in the issued state and valid state and reading discrete data and encoded data carried on the issued card in the guide device **40**.

GROUP 01

1-st guide sequence for A2
1-st computer sequence for A1
2-nd computer sequence for A1
3-rd computer sequence for A1
2-nd guide sequence for A2
3-rd guide sequence for A2
4-th computer sequence for A1 + A3

and

1-st guide sequence for A2
1-st computer sequence for A1
2-nd computer sequence for A1
3-rd computer sequence for A1
2-nd guide sequence for A2
3-rd guide sequence for A2
5-th computer sequence for A1
1-st sensor sequence for A5
6-th computer sequence for A1
1-st modem sequence for A6

2-nd modem sequence for A6

7-th computer sequence for A1 + A3

GROUP 02

1-st guide sequence for B2

1-st computer sequence for B1 + B3

2-nd computer sequence for B1

1-st sensor sequence for B5

3-rd computer sequence for B1

1-st modem sequence for B6

2-nd modem sequence for B6

4-th computer sequence for B1 + B3

GROUP 03

1-st guide sequence for B2

1-st computer sequence for B1 + B3

2-nd computer sequence for B1

1-st keyboard sequence for B4

1-st sensor sequence for B5

3-rd computer sequence for B1

1-st modem sequence for B6

2-nd modem sequence for B6

4-th computer sequence for B1 + B3

GROUP 04

1-st guide sequence for A2

1-st computer sequence for A1

2-nd computer sequence for A1

3-rd computer sequence for A1

2-nd guide sequence for A2

3-rd guide sequence for A2

4-th computer sequence for A1

1-st sensor sequence for A5

5-th computer sequence for A1

1-st modem sequence for A6

2-nd modem sequence for A6

6-th computer sequence for A1 + A3

GROUP 05

1-st guide sequence for B2

1-st computer sequence for B1 + B3

2-nd computer sequence for B1

1-st sensor sequence for B5

3-rd computer sequence for B1

1-st modem sequence for B6

2-nd modem sequence for B6

4-th computer sequence for B1 + B3

GROUP 06

1-st guide sequence for B2

1-st computer sequence for B1 + B3

2-nd computer sequence for B1

1-st keyboard sequence for B4

1-st sensor sequence for B5

3-rd computer sequence for B1

1-st modem sequence for B6

2-nd modem sequence for B6

4-th computer sequence for B1 + B3

Group 01 There will now be described with reference to figures 10, 11 and 12, the device operations **A1** to **A6** to originate a set of impersonal identifiers for an anonymous registration to perform the primary function **(A)** using the computer terminal **80** in figure 08 and the communication network **90** in figure 09.

Figure 10 shows an impersonal card **100** in the unissued state with a concealed integrated circuit **127** and a one-code image **106** which can be decoded and decrypted in the computer terminal **80** for printing a registration code **108** within the coded area **105** without reference to an individual person.

Figure 11 shows the impersonal card **100** in the issued state with a concealed integrated circuit **127** and a two-code image **110** which can be decoded and decrypted in the computer terminal **80** for verifying the registration code **108** within the coded area **105** without reference to an individual person.

Figure 12 shows the sensor device **01** with a group of numerals in the selected order 7531 for encrypting, to originate a user-identifier **98** in the computer terminal **80** without reference to an individual person.

In figure 10, each impersonal card **100** includes a counterpart card **101** and each part is inserted separately in the guide device **40** for writing the same discrete data **128** on each integrated circuit **127** and for terminal printing the same information on the impersonal card **100** and counterpart card **101** at the computer terminal **80**. The counterpart card **101** is therefore a duplicate for handing to the card-issuer and the impersonal card **100** is an original for handing to a cardholder after anonymous registration in the database of a card-type server **96**.

The impersonal card **100** and counterpart card **101** may be constructed of any sheet material **102** suitable for machine printing on both faces and may include a transparent film or coating on each face to provide a laminate material **102**. The laminate material **102** further incorporates a middle layer which contains an integrated circuit **127** and an aerial embedded therein which communicates with an antenna on the chip reader/writer **53** to receive discrete data **128** for storing in the memory of the integrated circuit **127**. An outer layer is laminated to each side of the middle layer to conceal the integrated circuit **127** within the laminate material **102**. The middle layer may also store card-type codes **104** and encoded data **109** concealed in the laminate material **102** for the impersonal card **100** and the counterpart. The guide device **40** shows the chip reader/writer **53** positioned in close proximity to grooves **43** which guide the laminate material **102** at the 1st-stop position **44** for energising an integrated circuit **127** to write data thereto or read data therein at a specified radio frequency. The laminate material **102** may also include a material with inductance and or capacitance properties for storing an electric charge to power the integrated circuit **127** to receive and transmit the said data.

The impersonal card **100** and counterpart card **101** may also be constructed to include a thermal coating on each face of the impersonal card **100** and counterpart card **101** for terminal printing in a thermal coded area **105** and a

thermal panel area **107.** Alternatively, a layer of thermal material is affixed on the surface of the laminate material **102** as shown in figure 10, to raise and define the thermal coded area **105** and the thermal panel area **107** for terminal printing on the impersonal card **100** and the counterpart card **101** for a discrete card-type. The thermal coded area **105** and thermal panel area **107** are positioned in the same horizontal plane for terminal printing an encrypted registration code **108** in the form of encoded data **109** in the thermal coded area **105**, and terminal printing ancillary data **111** in the thermal panel area **107**, on the impersonal card **100** and counterpart card **101** for a double print cycle.

The impersonal card **100** and counterpart card **101** are machine printed with the name of the card-issuer in the referenced display area **103** to visually identify any card-type and are supplied by the card-issuer in the unissued state for inserting in the computer terminal **80** to originate a set of impersonal identifiers for an anonymous registration.

The impersonal card **100** and counterpart card **101** is pre-printed with a card-type code **104** in the coded area **105** for optical recognition in a guide device **40** to identify an individual card **100** for a discrete card-type. Figure 10 shows the card-type code **104** in the form of a two dimensional symbology; any symbology or character set may be used for pre-printing an identity mark in the thermal coded area **105**. The card-type code **104** is impersonal and the registration code **108** is impersonal and anonymous and is therefore unknown to a card-issuer and cardholder during the unissued state, the issued state, the issued and valid state.

The thermal material in the coded area **105** and in the panel area **107** is capable of changing state by thermo-chemical reaction or by thermo-chromic reaction to provide a permanent and irreversible two-code image **110** in the coded area **105** and provide permanent and irreversible ancillary data **111** in the panel area **107**. Other security features can be incorporated in the thermal material such as holograms for visual inspection and passive circuits for radio frequency detection in the guide device **40**, which are concealed for checking and rejecting counterfeit copies of the impersonal card **100** in the computer terminal **80.**

The device operations **A1** and **A2** are performed by the computer device **80** and the guide device **40** according to the arranged order of sequences controlled by computer programs as set forth, by way of example.

The 1-st guide sequence for the device operation **A2** comprises, manually inserting the counterpart card **101** in the card-slot **41**, the card being guided by the grooves **43** to the 1st-stop position **44**. The switch **46** detects the guided card **101** and activates the scanner **48** to capture a one-code image **106** on the unissued card **101** for data transfer to the computer device **80**, and activates the chip reader/writer **53** to energise the concealed integrated circuit **127** for writing discrete data **128** in the memory of the integrated circuit **127**. The discrete data **128** is a facial image captured on an external camera.

The computer device **80** receives a bitmap of the one-code image **106** to verify that the card-type code **104** is recorded in the terminal register of the computer terminal **80** to accept the counterpart card **101**. The card-type code **104** consists of a 06-digit number which is decoded and decrypted for matching with a corresponding 06-digit number in the terminal register of the computer terminal **80**. The terminal register stores unique 15-digit numeric combinations and each numeric combination is assigned to one card-issuer and is divided into two numeric groups, comprising a 06-digit number to identify the card-type for card-issuer matching in the terminal register and a 09-digit number to identify the two-way communication identifier for the card-type. Consequently, the 06-digit number is a numeric constant for precise matching in the terminal register and the 09-digit number forms the site-identifier for the server location **95** and the site-identifier for the terminal location **91**.

The first computer sequence commences when two 06-digit numbers are matched to verify the card-type code **104** for identifying the card-issuer in the display area **103** on the counterpart card **101** in the said terminal register of the computer terminal **80**.

The 1-st computer sequence for the device operation **A1** comprises, compiling a 36-digit numeric combination, which is divided into the following numeric groups to form an original card-identifier **97** with point-of-origin indexing:

Numeric		Indexer
06 – digits	-	Card-type
12 – digits	-	Data-entry
08 – digits	-	Terminal
10 – digits	-	Time and date

The original card-identifier **97** therefore consists of impersonal data in the form of a constant 36-digit numeric combination and each numeric group identifies the card-type and the card-issuer, a data-entry for ancillary data, the number of the terminal location, and the time and date of origination, without reference to an individual person. The following example shows a collective series of constant numerals in each numeric group which forms an original card-identifier **97** in the computer terminal **80** - 132474 604282516937 29486058 1615220802.

The numeric combination and numeric groups may comprise of any quantity for recording and matching a set of impersonal identifiers, and each constant numeral may be concealed using a predetermined algorithm to alter the order and value for each constant numeral at a computer terminal **80** for reversion at a card-type server **96**. The variations for recording and matching impersonal card-identifiers **97** are infinite.

The 2-nd computer sequence for the device operation **A1** comprises, encrypting the 36-digit numeric combination into a registration code **108** to conceal the arranged order and combination of digits for printing the registration code **108** within the coded area **105** on the counterpart card **101** at the 2nd-stop position **55** in the guide device **40**.

The 3-rd computer sequence for the device operation **A1** comprises, encoding the registration code **108** and writing encoded data **109** together with ancillary data **111** to the printer means **62** in the guide device **40** for thermal printing the encoded data **109** within the coded area **105** on the counterpart card **101**, and for thermal printing the ancillary data **111** within the panel area **107** on the counterpart card **101** at the 2nd-stop position **55** in the guide device **40**.

The 2-nd guide sequence for the device operation **A2** comprises, activating the drive means **50** to engage the counterpart card **101** at the 1st-stop position **44** and transport the counterpart card **101** in the descent mode to the 2nd-stop position **55** and transport the counterpart card **101** in the ascent mode to the 1st-stop position **44** (in sequential order) in the guide device **40**. At the start of the ascent mode, the printer means **62** is pressed against the surface of the counterpart card **101** and the encoded data **109** is thermal printed in the coded area **105** and the ancillary data **111** is thermal printed in the panel area **107** during the ascent mode to complete a single print cycle in the guide device **40**. A typical print cycle to form a thermal image 9mm in height, comprises of 72 print pulses

and each print pulse generates a row of dots referred to as a dot-line by energising the row of micro-fine heating elements **70** on the print-head **62** which are in contact with the surface of the counterpart card **101** during the single print cycle.

The 3-rd guide sequence for the device operation **A2** comprises, activating the scanner **48** at the 1st-stop position **44** to capture a two-code image **110** in the coded area **105** for data transfer to the computer device **80**.

The 4-th computer sequence for the device operation **A1+A3** comprises, receiving a bitmap of the two-code image **110** for decoding and decrypting the registration code **108** to verify that the printed 36-digit registration code **108** matches the original 36-digit card-identifier **97** and to instruct the display device **86** to display a screen message to remove the counterpart card **101,** followed by a screen message to insert the impersonal card **100**. The said screen messages are operator instructions for the computer terminal **80.**

The impersonal card **100** is now manually inserted in the card-slot **41** to the 1st-stop position **44** of the guide device **40**. The following described sequences for the device operations **A1** and **A2** are repeated in the same sequential order for writing the same discrete data **128** to the integrated circuit **127**, printing the same encoded data **109** in the coded area **104** and printing the same ancillary data **111** in the panel area **107** on the impersonal card **100**:

the 1-st guide sequence for **A2**
the 1-st computer sequence for **A1**
the 2-nd computer sequence for **A1**
the 3-rd computer sequence for **A1**
the 2-nd guide sequence for **A2**
the 3-rd guide sequence for **A2**

The 5-th computer sequence for the device operation **A1** comprises, verifying that the printed 36-digit registration code **108** matches the original 36-digit card-identifier **97** and confirming that the impersonal card **100** is in the issued state. The impersonal card **100** remains stationary in the computer terminal **80** at the 1st-stop position **44** in the guide device **40**, to perform the device operation **A5.**

In figure 11, the impersonal card **100** is in the issued state and shows the coded area **105** with the machine printed card-type code **104** and the terminal printed registration code **108** in the form of encoded data **109**, and shows the panel area **107** with a terminal printed card number described as ancillary data

111. The impersonal card **100** is not in the valid state for cardholder use at this stage.

The device operations **A3** and **A4** are performed by the display device **86** and the keyboard device **87** and are used during the computer sequences for **A1**, the guide sequences for **A2**, the sensor sequences for **A5** and the modem sequences for **A6**. The display device **86** displays the operator instructions for each individual card for a discrete card-type and the keyboard device **87** is used according to the operator instructions for each individual card for a discrete card-type. A typical selection of operator instructions for the computer terminal **80** may comprise one or more of the following screen messages for any card in the unissued state or issued state: insert card – remove card – issue card – card accept – card reject – user accept – user reject – press reset – press print – enter value – enter number – press send – transaction accepted – transaction rejected.

The device operation **A5** is performed by the sensor device **01** according to the description for figures 01, 02 and 05, 06 for selecting a concealed group of numerals with the impersonal card **100** in the computer terminal **80** at the 1st-stop position **44** in the guide device **40**.

In figure 12, the sensor device **01** shows an arrangement of illuminated discrete segments **15** in each touch zone **06** to display an individual numeral from zero to nine in each touch zone **06**. The sensor device **01** is mounted on the computer terminal **80** shown in figure 08 for an individual user to select a concealed group of numerals. The referenced order **115**, **116**, **117** and **118** in figure 12 is used to input a 04-digit number in the selected order 7531 to describe the following sensor sequence and computer sequence.

The 1-st sensor sequence for the device operation **A5** comprises, energising the display element **13** in each touch zone **06** and illuminating discrete segments **15**, for displaying the ten different numerals in a random order in each touch zone **06**, and detect the finger contact in any touch zone **06** to locate the position of each numeral in the selected order 7531 on the active area of the touch screen **07** for data transfer to the computer device **80**. The display elements **13** are de-energised following the input of the 04-digit number to the computer device **80**.

The 04-digit number is personal information known only to the user and is an incomplete part of a 36-digit numeric combination unknown to the user to form

an original user-identifier **98** in the computer device **80** without reference to the individual person. A specific operator instruction is performed by the display device **86** and on the keyboard device **87** for the device operations **A3** and **A4** to input the gender of the user for an impersonal user-identifier. In operation, the display device **86** instructs the operator to press the send key for a male user or press the send key for a female user to transmit the set of numeric data with a gender identifier (1 or 0) for recording or matching in the database of a card-type server in accordance with any of the described sequence groups 01 to 06 for registration.

The 6-th computer sequence for the device operation **A1** comprises, receiving the 04-digit number and encrypting it into a 36-digit numeric combination which is divided into the following numeric groups to form an original user-identifier **98** with point-of-origin constancy:

Variant	Constant
09-digits	7
09-digits	5
09-digits	3
09-digits	1

The original user-identifier **98** therefore consists of impersonal data in the form of a 36-digit numeric combination and each 09-digit numeric group consists of variant numerals with one constant numeral located therein, in the selected order according to its numerical value without reference to an individual person. The following example shows the underlined position of the constant numeral in each numeric group which forms part of the original user-identifier **98** in the computer terminal **80** : 146289<u>7</u>35 269<u>1</u>58740 62<u>3</u>817495 <u>1</u>46725803

The numeric combination and numeric groups may comprise of any quantity for recording and matching a set of impersonal identifiers, and each constant numeral may be concealed using a pre-determined algorithm to alter the order and value for each constant numeral at a computer terminal **80** for reversion at a card-type server **96**. The variations for recording and matching impersonal user-identifiers **98** are infinite.

The device operation **A6** is performed by the modem device which forms part of the computer device **80** wherein, a site-identifier **95**, a card-identifier **97**, and a user-identifier **98** are combined in an arranged order to form a set of impersonal identifiers for outbound transmission from the terminal location **91** to

the server location **95** to create a card-type record **99** for an anonymous registration at the card-type server **96,** and wherein, a site-identifier **91** and a file-identifier **99** with recorded status or unrecorded status, are combined in an arranged order to form a set of instruction identifiers for inbound transmission from the server location **95** to the terminal location **91** to either accept the impersonal card **100** at the computer terminal **80** or reject the impersonal card **100** at the computer terminal **80**.

The 1-st modem sequence for the device operation **A6** comprises, transmitting a set of numeric data in an arranged order. The set of numeric data consists of an 81-digit numeric combination, divided into the following numeric groups for outbound transmission with point-of-origin identity:

Numeric	Identifier
09 – digits	site-identifiers
36 – digits	card-identifier
36 – digits	user-identifier

The set of numeric data includes the impersonal site-identifier for server location **95** and terminal location **91** to form the two-way communication identifier for routing the set of numeric data to the database of the server **96** to create a card-type record **99** wherein, the 36-digit numeric group for the original card-identifier **97** is recorded in a 1-st datafile, and the 36-digit numeric group for the original user-identifier **98** is recorded in a 2-nd datafile, for recorded status to sanction an anonymous registration.

The 1-st datafile and 2-nd datafile of a card-type record **99** are used for recording and matching numeric groups with a constant order. Therefore, the constant numerals (36-digits) for an original and duplicate card-identifier **97** are matched in the database to complete a one-match sequence, and the constant numerals (04-digits) for an original and duplicate user-identifier **98** are matched in the database to complete a two-match sequence in a card-type server **96**.

The 2-nd modem sequence for the device operation **A6** comprises, receiving a set of numeric data from the card-type server **96** in an arranged order. The set of numeric data consists of a 18-digit numeric combination, divided into the following numeric groups for inbound transmission with point-of-origin identity:

Numeric	Identifier
09 – digits	site-identifiers

09 – digits file-identifiers

The set of numeric data includes the impersonal site-identifier for server location **95** and terminal location **91** to form the two-way communication identifier for routing the set of numeric data to the computer terminal **80**. The set of numeric data includes the file-identifier **99** to confirm that the original card-identifier **97** and original user-identifier **98** are recorded or unrecorded in the database of a card-type server **96**. Consequently, the computer terminal **80** receives an inbound set of numeric data accepting a recorded file-identifier **99** or receives an inbound set of numeric data rejecting an unrecorded file-identifier **99**.

The 7-th computer sequence for the device operation **A1+A3** comprises, instructing the display device **86** to display a screen message to accept or reject the impersonal card **100**, followed by a screen message to remove the impersonal card **100** from the computer terminal **80**.

An impersonal card **100** with recorded status is a card accept and therefore valid for cardholder use, and an impersonal card **100** with unrecorded status is a card reject and therefore invalid for cardholder use. The terminal operator hands over the valid impersonal card **100** to the impersonal user which entered the 04-digit number in the selected order 7531 at the computer terminal **80** to complete an anonymous registration.

The described device operations **A1** to **A6** are a preferred method to execute the primary function **(A)** using the computer terminal **80** in figure 08 and the communication network **90** in figure 09. The described modes of operation and sequences may be varied and are not precluded for executing the primary function **(A)** to originate a set of impersonal identifiers for an anonymous registration, according to the present invention.

Group 02 There will now be described with reference to figures 13 and 14, the device operations **B1** to **B6** to duplicate a set of impersonal identifiers for an anonymous validation to perform the primary function **(B)** using the computer terminal **80** in figure 08 and the communication network **90** in figure 09.

Figure 13 shows the impersonal card **100** in the issued state and valid state with a concealed integrated circuit **127** and a two-code image **110** for decoding and decrypting to generate a duplicate card-identifier **97** in the computer terminal **80** without reference to an individual person.

Figure 14 shows the sensor device **01** with a group of numerals in the selected order 7531 for encrypting to generate a duplicate user-identifier **98** in the computer terminal **80** without reference to an individual person.

The device operations **B1** and **B2** are performed by the computer device **80** and the guide device **40** according to the arranged order of sequences controlled by computer programs as set forth, by way of example.

The 1-st guide sequence for the device operation **B2** comprises, manually inserting the impersonal card **100** in the card-slot **41**, the card being guided by the grooves **43** to the 1st-stop position **44**. The switch **46** detects the guided card **100** and activates the scanner **48** to capture a two-code image **110** on the issued card **100** for data transfer to the computer device **80**, and activates the chip reader/writer **53** to energise the concealed integrated circuit **127** for reading discrete data **128** in the memory of the integrated circuit **127**. The discrete data **128** is a facial image displayed on an external screen.

The 1-st computer sequence for the device operation **B1+B3** comprises, receiving a bitmap of the two-code image **110** for decoding and decrypting the card-type code **104** to verify that the 06-digit number is recorded in the terminal register of the computer terminal **80** to identify the card-type, and to instruct the display device **86** to display a screen message for card accept or card reject.

The 2-nd computer sequence for the device operation **B1** comprises, accepting the card-type, reading the bitmap for decoding and decrypting the registration code **108** and compiling the 36-digit numeric combination into the numeric groups to form a duplicate card-identifier **97** with the same point-of-origin in the computer terminal **80**: 132474 604282516937 29486058 1615220802.

In figure 13, the impersonal card **100** is shown in the issued state and in the valid state for cardholder use in the computer terminal **80**. The same impersonal card **100** in figure 11 is shown in the issued state and is not in the valid state for cardholder use, to distinguish the difference between the card in figure 11 and the card in figure 13. The impersonal card **100** remains stationary in the computer terminal **80** at the 1st-stop position **44** in the guide device **40** to perform the device operation **B5**.

The device operations **B3** and **B4** are performed by the display device **86** and the keyboard device **87** and are used during the computer sequences for **B1**, the guide sequences for **B2**, the sensor sequences for **B5** and the modem

sequences for **B6**. The display device **86** displays the operator instructions for each individual card for a discrete card-type and the keyboard device **87** is used according to the operator instructions for each individual card for a discrete card-type. A typical selection of operator instructions for the computer terminal **80** may comprise one or more of the following screen messages for any card in the unissued state or issued state: insert card – remove card – issue card – card accept – card reject – user accept – user reject – press reset – press print – enter value – enter number – press send – transaction accepted – transaction rejected.

The device operation **B5** is performed by the sensor device **01** according to the description for figures 01, 02 and 05, 06 for selecting a concealed group of numerals with the impersonal card **100** in the computer terminal **80** at the 1st-stop position **44** in the guide device **40**.

In figure 14, the sensor device **01** shows an arrangement of illuminated discrete segments **15** in each touch zone **06** to display an individual numeral from zero to nine in each touch zone **06**. The sensor device **01** is mounted on the computer terminal **80** shown in figure 08 for an individual user to select a concealed group of numerals. The referenced order **115**, **116**, **117** and **118** is used in figure 14 to input a 04-digit number in the selected order 7531 to describe the following sensor sequence and computer sequence.

The 1-st sensor sequence for the device operation **B5** comprises, energising the display element **13** in each touch zone **06**, illuminating discrete segments **15** for displaying the ten different numerals in a random order in each touch zone **06**, and detecting the finger contact in any touch zone **06** to locate the position of each numeral in the selected order 7531 on the active area of the touch screen **07** for data transfer to the computer device **80**. The display elements **13** are de-energised following the input of the 04-digit number to the computer device **80**.

The 04-digit number is personal information known only to the user and is an incomplete part of a 36-digit numeric combination unknown to the user to form an original user-identifier **98** in the computer device **80** without reference to the individual person. A specific operator instruction is performed by the display device **86** and on the keyboard device **87** for the device operations **B3** and **B4** to input the gender of the user for an impersonal user-identifier. In operation, the display device **86** instructs the operator to press the send key for a male user or press the

send key for a female user to transmit the set of numeric data with a gender identifier (1 or 0) for recording or matching in the database of a card-type server in accordance with any of the described sequence groups 01 to 06 for registration.

The 3-rd computer sequence for the device operation **B1** comprises, receiving the 04-digit number and encrypting it into a 36-digit numeric combination which is divided into the following numeric groups to form a duplicate user-identifier **98** with point-of-origin constancy:

Variant	Constant
09-digits	7
09-digits	5
09-digits	3
09-digits	1

The duplicate user-identifier **98** therefore consists of impersonal data in the form of a 36-digit numeric combination and each 09-digit numeric group consists of variant numerals with one constant numeral located therein, in the selected order according to its numerical value without reference to an individual person. The following example shows the underlined position of the constant numeral in each numeric group which forms part of the duplicate user-identifier **98** in the computer terminal **80** : 721461756 348153245 143040692 130265402

The device operation **B6** is performed by the modem device which forms part of the computer device **80** wherein, a site-identifier **95**, a card-identifier **97**, a user-identifier **98** and a date-identifier are combined in an arranged order to form a set of impersonal identifiers for outbound transmission from the terminal location **91** to the server location **95** to locate the card-type record **99** for matching at the card-type server **96,** and wherein, a site-identifier **91** and a file-identifier **99** with matched status or unmatched status, are combined in an arranged order to form a set of instruction identifiers for inbound transmission from the server location **95** to the terminal location **91** accepting the card and user at the computer terminal **80** or rejecting the card and user at the computer terminal **80**.

The 1-st modem sequence for the device operation **B6** comprises, transmitting a set of numeric data in an arranged order. The set of numeric data consists of a 91-digit numeric combination, divided into the following numeric groups for outbound transmission with point-of-origin identity:

Numeric	Identifier

09 – digits	site-identifiers
36 – digits	card-identifier
36 – digits	user-identifier
10 – digits	date-identifier

The set of numeric data includes the impersonal site-identifier for server location **95** and terminal location **91** to form the two-way communication identifier for routing the set of numeric data to the database of the server **96** to locate a card-type record **99** wherein, the 36-digit numeric group for the duplicate card-identifier **97** is matched in the 1-st datafile, and the 36-digit numeric group for the duplicate user-identifier **98** is matched in the 2-nd datafile, for matched status to sanction an anonymous validation. The 10-digit numeric group for the date-identifier is recorded in a 3-rd datafile for matched status. The 10-digits consist of 04-digits for time and 06-digits for date.

The 1-st datafile and 2-nd datafile of a card-type record **99** are used for recording and matching numeric groups with a constant order. Therefore, the constant numerals (36-digits) for an original and duplicate card-identifier **97** are matched in the database to complete a one-match sequence, and the constant numerals (04-digits) for an original and duplicate user-identifier **98** are matched in the database to complete a two-match sequence in a card-type server **96**.

The 2-nd modem sequence for the device operation **B6** comprises, receiving a set of numeric data from the card-type server **96** in an arranged order. The set of numeric data consists of a 18-digit numeric combination, divided into the following numeric groups for inbound transmission with point-of-origin identity:

Numeric	Identifier
09 – digits	site-identifiers
09 – digits	file-identifiers

The set of numeric data includes the impersonal site-identifier for server location **95** and terminal location **91** to form the two-way communication identifier for routing the set of numeric data to the computer terminal **80**. The set of numeric data includes the file-identifier **99** to confirm that the duplicate card-identifier **97** and duplicate user-identifier **98** are matched or unmatched in the database of a card-type server **96**. Consequently, the computer terminal **80** receives an inbound set of numeric data accepting a matched file-identifier **99** or receives an inbound set of numeric data rejecting an unmatched file-identifier **99**.

The 4-th computer sequence for the device operation **B1+B3** comprises, instructing the display device **86** to display a screen message to accept or reject the impersonal card **100**, followed by a screen message to remove the impersonal card **100** from the computer terminal **80**.

An impersonal card **100** with matched status is a card accept and therefore valid for cardholder use, and an impersonal card **100** with unmatched status is a card reject and therefore invalid for cardholder use. The terminal operator hands over the valid impersonal card **100** to the impersonal user which entered the 04-digit number in the selected order 7531 at the computer terminal **80** to complete the anonymous validation.

The described device operations **B1** to **B6** are a preferred method to execute the primary function **(B)** using the computer terminal **80** in figure 08 and the communication network **90** in figure 09. The described modes of operation and sequences may be varied and are not precluded for executing the primary function **(B)** to generate a set of impersonal identifiers for an anonymous validation, according to the present invention.

Group 03 Is a preferred example for transaction use. The described 1-st modem sequence for the device operation **B6** comprises transmitting the said set of numeric data in an arranged order with an additional 08-digit numeric group for a data-identifier which is recorded in the said card-type record **99**. The data-identifier is a transaction value for authorised payment within a credit limit at the card-type record 99 and is recorded in a 4-th datafile during an anonymous validation. The 08-digit numeric group is originated by the 1-st keyboard sequence for the device operation **B4** in advance of the 1-st sensor sequence for the device operation **B5.**

The 1-st keyboard sequence for the device operation **B4** comprises, entering the transaction value for data transfer to the computer device **80** in response to a computer sequence for **B1** to instruct the display device **86** to display a first screen message for the operator to enter the retail value on the keyboard **87** and instruct the display device **86** to display a second screen message for the cardholder to enter a 04-digit number in a selected order on the sensor **01**. The impersonal card **100** remains inserted in the computer terminal **80** at the 1st-stop position **44** in the guide device **40** to perform the device operation **B4** and subsequent device operations **B5** and **B6**.

Group 04 There will now be described with reference to figures 15, 16 and 17, the device operations **A1** to **A6** to originate a set of impersonal identifiers for an anonymous registration to perform the primary function **(A)** using the computer terminal **80** in figure 08 and the communication network **90** in figure 09.

Figure 15 shows a personal card **120** in the unissued state with a card-type code **128** to decode and decrypt for printing a registration code **131** in the form of encoded data **132** in a thermal coded area **130** without reference to an individual person.

Figure 16 shows the personal card **120** in the issued state with a one-code image **133** to decode and decrypt in the computer terminal **80** for verifying the registration code **131** in the thermal coded area **130** without reference to an individual person.

Figure 17 shows the sensor device **01** with a group of numerals in the selected order 8642 for encrypting to originate a user-identifier **98** in the computer terminal **80** without reference to an individual person.

The personal card **120** may be constructed of any sheet material **121** suitable for machine printing on both faces and may include a transparent film or coating on each face to provide a laminate material **121**. The laminate material **121** further incorporates a middle layer which contains an integrated circuit **127** and an aerial embedded therein which communicates with an antenna on the chip reader/writer **53** to receive discrete data **128** for storing in the memory of the integrated circuit **127**. An outer layer is laminated to each side of the middle layer to conceal the integrated circuit **127** within the laminate material **121**. The middle layer may also store card-type codes **128** and encoded data **132** concealed in the laminate material **121** for a personal card **120** and a counterpart. The guide device **40** shows the chip reader/writer **53** positioned in close proximity to grooves **43** which guide the laminate material **121** at the 1st-stop position **44** for energising an integrated circuit **127** to write data thereto or read data therein at a specified radio frequency. The laminate material **121** may also include a material with inductance and or capacitance properties for storing an electric charge to power the integrated circuit **127** to receive and transmit the said data.

The personal card **120** may also be constructed to include a thermal coating on each face of the personal card **120** for terminal printing in the thermal coded area **130**. Alternatively, a layer of thermal material is affixed on the surface

of the laminate material **121** as shown in figure 15, to raise and define the thermal coded area **130** for terminal printing on the personal card **120** for a discrete card-type. The thermal coded area **130** is positioned in the same vertical and horizontal plane for terminal printing encoded data **132** in the form of a two dimension symbology on the personal card **120** for a single print cycle.

Figures 15 and 16 show the personal card **120** constructed with an exposed integrated circuit **127** which contains a card-type code **128** to identify the card-type in the computer terminal **80**. The personal card **120** is supplied by the card-issuer to the cardholder in the unissued state with pre-printed personal information, the account number **123**, the expiry date **124** and the account name **125**. The name of the issuer is printed in the display area **122**. The personal information on any personal card **120** is superfluous according to the present invention, and is therefore disregarded for identification use or transaction use in any computer terminal **80**. Consequently, a set of impersonal identifiers are not referenced to the personal information displayed or carried on the personal card **120**.

The thermal material in the coded area **130** is capable of changing state by thermo-chemical reaction or by thermo-chromic reaction to provide a permanent and irreversible one-code image **133** printed thereon. Other security features are incorporated in the thermal material **121** comprising holograms for visual inspection and passive circuits for radio frequency detection in the guide device **40**, which are concealed for checking and rejecting counterfeit copies of the personal card **120** in the computer terminal **80**.

The device operations **A1** and **A2** are performed by the computer device **80** and the guide device **40** according to the arranged order of sequences controlled by computer programs as set forth, by way of example.

The 1-st guide sequence for the device operation **A2** comprises, manually inserting the personal card **120** in the card-slot **41**, the card being guided by the grooves **43** to the 1st-stop position **44**. The switch **46** detects the guided card **120** and activates the scanner **48** to capture a blank image **129** on the unissued card **120** for data transfer to the computer device **80**, and activates the chip reader/writer **53** to energise the concealed integrated circuit **127** for reading the card-type code **128** in the memory of the integrated circuit **127**. The card-type code **128** is impersonal information recorded on a personal card **120** by the card-issuer.

The computer device **80** receives the card-type code **128** for decoding and decrypting to verify that the card-type code **128** is recorded in the terminal register of the computer terminal **80** to accept the personal card **120**, and the computer device **80** receives a bitmap of the blank image **129** to verify that the personal card **120** is in the unissued state.

The card-type code **128** consists of a 06-digit number which is decoded and decrypted for matching with a corresponding 06-digit number in the terminal register of the computer terminal **80**. The terminal register stores unique 15-digit numeric combinations and each numeric combination is assigned to one card-issuer and is divided into two numeric groups, comprising a 06-digit number to identify the card-type for card-issuer matching in the terminal register and a 09-digit number to identify the two-way communication identifier for the card-type. Consequently, the 06-digit number is a numeric constant for precise matching in the terminal register and the 09-digit number forms the site-identifier for the server location **95** and the site-identifier for the terminal location **91**.

The first computer sequence commences when two 06-digit numbers are matched to verify the card-type code **128** for identifying the card-issuer in the display area **122** on the personal card **120** in the said terminal register of the computer terminal **80**.

The 1-st computer sequence for the device operation **A1** comprises, compiling a 36-digit numeric combination, which is divided into the following numeric groups to form an original card-identifier **97** with point-of-origin indexing:

Numeric		Indexer
06 – digits	-	Card-type
12 – digits	-	Data-entry
08 – digits	-	Terminal
10 – digits	-	Time and date

The original card-identifier **97** therefore consists of impersonal data in the form of a constant 36-digit numeric combination and each numeric group identifies the card-type and the card-issuer, a data-entry for ancillary data, the number of the terminal location, and the time and date of origination, without reference to an individual person. The following example shows a collective series of constant numerals in each numeric group which forms an original card-identifier **97** in the computer terminal **80:** 548720 315874510368 59723054 0925130802.

The numeric combination and numeric groups may comprise of any quantity for recording and matching a set of impersonal identifiers, and each constant numeral may be concealed using a predetermined algorithm to alter the order and value for each constant numeral at a computer terminal **80** for reversion at a card-type server **96**. The variations for recording and matching impersonal card-identifiers **97** are infinite.

The 2-nd computer sequence for the device operation **A1** comprises, encrypting the 36-digit numeric combination into a registration code **131** to conceal the arranged order and combination of digits for thermal printing the registration code **131** in the coded area **130** on the personal card **120** at the 2nd-stop position **55** in the guide device **40**.

The 3-rd computer sequence for the device operation **A1** comprises, encoding the registration code **131** and writing encoded data **132** to the printer means **62** in the guide device **40** for thermal printing the encoded data **132** in the coded area **130** on the personal card **120** at the 2nd-stop position **55** in the guide device **40**.

The 2-nd guide sequence for the device operation **A2** comprises, activating the drive means **50** to engage the personal card **120** at the 1st-stop position **44** and transport the personal card **120** in the descent mode to the 2nd-stop position **55** and transport the personal card **120** in the ascent mode to the 1st-stop position **44** (in sequential order) in the guide device **40**. At the start of the ascent mode, the printer means **62** is pressed against the surface of the personal card **120** and the encoded data **132** is thermal printed in the coded area **130** during the ascent mode to complete a single print cycle in the guide device **40**. A typical print cycle to form a thermal image 9mm in height, comprises of 72 print pulses and each print pulse generates a row of dots referred to as a dot-line by energising the row of micro-fine heating elements **70** on the print-head **62** which are in contact with the surface of the personal card **120** during the single print cycle.

The 3-rd guide sequence for the device operation **A2** comprises, activating the scanner **48** at the 1st-stop position **44** to capture a one-code image **133** of the coded area **130** for data transfer to the computer device **80**.

The 4-th computer sequence for the device operation **A1** comprises, verifying that the printed 36-digit registration code **131** matches the original 36-digit card-identifier **97** and confirm that the personal card **120** is in the issued state.

The personal card **120** remains stationary in the computer terminal **80** at the 1st-stop position **44** in the guide device **40**, to perform the device operation **A5**.

In figure 16, the personal card **120** is in the issued state and shows the thermal coded area **130** with the terminal printed registration code **131** in the form of encoded data **132**. The personal card **120** is not in the valid state for cardholder use at this stage.

The device operations **A3** and **A4** are performed by the display device **86** and the keyboard device **87**, and are used during the computer sequences for **A1**, the guide sequences for **A2**, the sensor sequences for **A5** and the modem sequences for **A6**. The display device **86** displays the operator instructions for each individual card for a discrete card-type and the keyboard device **87** is used according to the operator instructions for each individual card for a discrete card-type. A typical selection of operator instructions for the computer terminal **80** may comprise one or more of the following screen messages for any card in the unissued state or issued state: insert card – remove card – issue card – card accept – card reject – user accept – user reject – press reset – press print – enter value – enter number – press send – transaction accepted – transaction rejected.

The device operation **A5** is performed by the sensor device **01** according to the description for figures 01, 02 and 05, 06 for selecting a concealed group of numerals with the personal card **120** in the computer terminal **80** at the 1st-stop position **44** in the guide device **40**.

In figure 17, the sensor device **01** shows an arrangement of illuminated discrete segments **15** in each touch zone **06** to display an individual numeral from zero to nine in each touch zone **06**. The sensor device **01** is mounted on the computer terminal **80** shown in figure 08 for an individual user to select a concealed group of numerals. The referenced order **135**, **136**, **137** and **138** is used in figure 17 to input a 04-digit number in the selected order 8642 to describe the following sensor sequence and computer sequence.

The 1-st sensor sequence for the device operation **A5** comprises, energising the display element **13** in each touch zone **06** and illuminating discrete segments **15**, for displaying the ten different numerals in a random order in each touch zone **06**, and detecting the finger contact in any touch zone **06** to locate the position of each numeral in the selected order 8642 on the active area of the touch screen **07** for data transfer to the computer device **80**. The display elements **13**

are de-energised following the input of the 04-digit number to the computer device **80**.

The 04-digit number is personal information known only to the user and is an incomplete part of a 36-digit numeric combination unknown to the user to form a duplicate user-identifier **98** in the computer device **80** without reference to the individual person. A specific operator instruction is performed by the display device **86** and on the keyboard device **87** for the device operations **A3** and **A4** to input the gender of the user for an impersonal user-identifier. In operation, the display device **86** instructs the operator to press the send key for a male user or press the send key for a female user to transmit the set of numeric data with a gender identifier (1 or 0) for recording or matching in the database of a card-type server in accordance with any of the described sequence groups 01 to 06 for validation.

The 5-th computer sequence for the device operation **A1** comprises, receiving the 04-digit number and encrypting it into a 36-digit numeric combination which is divided into the following numeric groups to form an original user-identifier **98** with point-of-origin constancy:

Variant	Constant
09-digits	8
09-digits	6
09-digits	4
09-digits	2

The original user-identifier **98** therefore consists of impersonal data in the form of a 36-digit numeric combination and each 09-digit numeric group consists of variant numerals with one constant numeral located therein, in the selected order according to its numerical value without reference to an individual person. The following example shows the underlined position of the constant numeral in each numeric group which forms part of the original user-identifier **98** in the computer terminal **80** : 317416281 924806047 826405189 62315794

The numeric combination and numeric groups may comprise any quantity for recording and matching a set of impersonal identifiers, and each constant numeral may be concealed using a pre-determined algorithm to alter the order and value for each constant numeral at a computer terminal **80** for reversion at a card-type server **96**. The variations for recording and matching impersonal user-identifiers **98** are infinite.

The device operation **A6** is performed by the modem device which forms part of the computer device **80** wherein, a site-identifier **95**, a card-identifier **97**, and a user-identifier **98** are combined in an arranged order to form a set of impersonal identifiers for outbound transmission from the terminal location **91** to the server location **95** to create a card-type record **99** for an anonymous registration at the card-type server **96**, and wherein, a site-identifier **91** and a file-identifier **99** with recorded status or unrecorded status, are combined in an arranged order to form a set of instruction identifiers for inbound transmission from the server location **95** to the terminal location **91** to either accept the personal card **120** at the computer terminal **80** or reject the personal card **120** at the computer terminal **80**.

The 1-st modem sequence for the device operation **A6** comprises, transmitting a set of numeric data in an arranged order. The set of data consists of an 81-digit numeric combination, divided into the following numeric groups for outbound transmission with point-of-origin identity:

Numeric	Identifier
09 – digits	site-identifiers
36 – digits	card-identifier
36 – digits	user-identifier

The set of numeric data includes the impersonal site-identifier for server location **95** and terminal location **91** to form the two-way communication identifier for routing the set of numeric data to the database of the server **96** to create a card-type record **99** wherein, the 36-digit numeric group for the original card-identifier **97** is recorded in a 1-st datafile, and the 36-digit numeric group for the original user-identifier **98** is recorded in a 2-nd datafile, for recorded status to sanction an anonymous registration.

The 1-st datafile and 2-nd datafile of a card-type record **99** are used for recording and matching numeric groups with a constant order. Therefore, the constant numerals (36-digits) for an original and duplicate card-identifier **97** are matched in the database to complete a one-match sequence, and the constant numerals (04-digits) for an original and duplicate user-identifier **98** are matched in the database to complete a two-match sequence in a card-type server **96**.

The 2-nd modem sequence for the device operation **A6** comprises, receiving a set of numeric data from the card-type server **96** in an arranged order.

The set of numeric data consists of a 18-digit numeric combination, divided into the following numeric groups for inbound transmission with point-of-origin identity:

Numeric	Identifier
09 – digits	site-identifiers
09 – digits	file-identifiers

The set of numeric data includes the impersonal site-identifier for server location **95** and terminal location **91** to form the two-way communication identifier for routing the set of numeric data to the computer terminal **80**. The set of numeric data includes the file-identifier **99** to confirm that the original card-identifier **97** and original user-identifier **98** are recorded or unrecorded in the database of a card-type server **96**. Consequently, the computer terminal **80** receives an inbound set of numeric data accepting a recorded file-identifier **99** or receives an inbound set of numeric data rejecting an unrecorded file-identifier **99**.

The 6-th computer sequence for the device operation **A1+A3** comprises, instructing the display device **86** to display a screen message to accept or reject the personal card **120**, followed by a screen message to remove the personal card **120** from the computer terminal **80**.

A personal card **120** with recorded status is a card accept and therefore valid for cardholder use, and a personal card **120** with unrecorded status is a card reject and therefore invalid for cardholder use. The terminal operator hands over the valid personal card **120** to the impersonal user which entered the 04-digit number in the selected order 8642 at the computer terminal **80** to complete the anonymous registration.

The described device operations **A1** to **A6** are a preferred method to execute the primary function **(A)** using the computer terminal **80** in figure 08 and the communication network **90** in figure 09. The described modes of operation and sequences may be varied and are not precluded for executing the primary function **(A)** to originate a set of impersonal identifiers for an anonymous registration, according to the present invention.

Group 05 There will now be described with reference to the figures 18 and 19, the device operations **B1** to **B6** to duplicate a set of impersonal identifiers for an anonymous validation to perform the primary function **(B)** using the computer terminal **80** in figure 08 and the communication network **90** in figure 09.

Figure 18 shows the personal card **120** in the issued state and valid state with a one-code image **133** for decoding and decrypting to generate a duplicate card-identifier **97** in the computer terminal **80** without reference to an individual person.

Figure 19 shows the sensor device **01** with a group of numerals in the selected order 8642 for encrypting to generate a duplicate user-identifier **98** in the computer terminal **80** without reference to an individual person.

The device operations **B1** and **B2** are performed by the computer device **80** and the guide device **40** according to the arranged order of sequences controlled by computer programs as set forth, by way of example.

The 1-st guide sequence for the device operation **B2** comprises, manually inserting the personal card **120** in the card-slot **41** and is guided by the grooves **43** to the 1st-stop position **44**. The switch **46** detects the guided card **120** and activates the scanner **48** to capture a one-code image **133** on the issued card **120** for data transfer to the computer device **80**, and activates the chip reader/writer **53** to energise the concealed integrated circuit **127** for reading the card-type code **128** in the memory of the integrated circuit **127**. The card-type code **128** is impersonal information recorded on a personal card **120** by the card-issuer.

The 1-st computer sequence for the device operation **B1+B3** comprises, receiving the card-type code **128** for decoding and decrypting the card-type code **128** to verify that the 06-digit number is recorded in the terminal register of the computer terminal **80** to identify the card-type, and to instruct the display device **86** to display a screen message for card accept or card reject.

The 2-nd computer sequence for the device operation **B1** comprises, accepting the card-type, reading the bitmap for decoding and decrypting the registration code **131** and compiling the 36-digit numeric combination into the numeric groups to form a duplicate card-identifier **97** with the same point-of-origin in the computer terminal **80**: 548720 315874510368 59723054 0925130802.

In figure 18, the personal card **120** is shown in the issued state and in the valid state for cardholder use in the computer terminal **80**. The same personal card **120** in figure 16 is shown in the issued state and is not in the valid state for cardholder use, to distinguish the difference between the card in figure 16 and the card in figure 18. The personal card **120** remains stationary in the computer

terminal **80** at the 1st-stop position **44** in the guide device **40** to perform the device operation **B5**.

The device operations **B3** and **B4** are performed by the display device **86** and the keyboard device **87**, and are used during the computer sequences for **B1**, the guide sequences for **B2**, the sensor sequences for **B5** and the modem sequences for **B6**. The display device **86** displays the operator instructions for each individual card for a discrete card-type and the keyboard device **87** is used according to the operator instructions for each individual card for a discrete card-type. A typical selection of operator instructions for the computer terminal **80** may comprise one or more of the following screen messages for any card in the unissued state or issued state: insert card – remove card – issue card – card accept – card reject – user accept – user reject – press reset – press print – enter value – enter number – press send – transaction accepted – transaction rejected.

The device operation **B5** is performed by the sensor device **01** according to the description for figures 01, 02 and 05, 06 for selecting a concealed group of numerals with the personal card **120** in the computer terminal **80** at the 1st-stop position **44** in the guide device **40**.

In figure 19, the sensor device **01** shows an arrangement of illuminated discrete segments **15** in each touch zone **06** to display an individual numeral from zero to nine in each touch zone **06**. The sensor device **01** is mounted on the computer terminal **80** shown in figure 08 for an individual user to select a concealed group of numerals. The referenced order **135**, **136**, **137** and **138** is used in figure 19 to input a 04-digit number in the selected order 8642 to describe the following sensor sequence and computer sequence.

The 1-st sensor sequence for the device operation **B5** comprises, energising the display element **13** in each touch zone **06** and illuminating discrete segments **15** for displaying the ten different numerals in a random order in each touch zone **06**, and detecting the finger contact in any touch zone **06** to locate the position of each numeral in the selected order 8642 on the active area of the touch screen **07** for data transfer to the computer device **80**. The display elements **13** are de-energised following the input of the 04-digit number to the computer device **80**.

The 04-digit number is personal information known only to the user and is an incomplete part of a 36-digit numeric combination unknown to the user to form

a duplicate user-identifier **98** in the computer device **80** without reference to the individual person. A specific operator instruction is performed by the display device **86** and on the keyboard device **87** for the device operations **B3** and **B4** to input the gender of the user for an impersonal user-identifier. In operation, the display device 86 instructs the operator to press the send key for a male user or press the send key for a female user to transmit the set of numeric data with a gender identifier (1 or 0) for recording or matching in the database of a card-type server in accordance with any of the described sequence groups 01 to 06 for validation.

The 3-rd computer sequence for the device operation **B1** comprises, receiving the 04-digit number and encrypting it into a 36-digit numeric combination which is divided into the following numeric groups to form a duplicate user-identifier **98** with point-of-origin constancy:

Variant	Constant
09-digits	8
09-digits	6
09-digits	4
09-digits	2

The duplicate user-identifier **98** therefore consists of impersonal data in the form of a 36-digit numeric combination and each 09-digit numeric group consists of variant numerals with one constant numeral located therein, in the selected order according to its numerical value without reference to an individual person. The following example shows the underlined position of the constant numeral in each numeric group which forms part of the duplicate user-identifier **98** in the computer terminal **80** : 912616487 720506879 313456487 825703504

The device operation **B6** is performed by the modem device which forms part of the computer device **80** wherein, a site-identifier **95**, a card-identifier **97**, a user-identifier **98** and a date-identifier are combined in an arranged order to form a set of impersonal identifiers for outbound transmission from the terminal location **91** to the server location **95** to locate the card-type record **99** for matching at the card-type server **96,** and wherein, a site-identifier **91** and a file-identifier **99** with matched status or unmatched status, are combined in an arranged order to form a set of instruction identifiers for inbound transmission from the server location **95** to the terminal location **91** accepting the card and user at the computer terminal **80** or rejecting the card and user at the computer terminal **80**.

The 1-st modem sequence for the device operation **B6** comprises, transmitting a set of numeric data in an arranged order. The set of numeric data consists of a 91-digit numeric combination, divided into the following numeric groups for outbound transmission with point-of-origin identity:

Numeric	Identifier
09 – digits	site-identifiers
36 – digits	card-identifier
36 – digits	user-identifier
10 – digits	date-identifier

The set of numeric data includes the impersonal site-identifier for server location **95** and terminal location **91** to form the two-way communication identifier for routing the set of data to the database of the server **96** to locate a card-type record **99** wherein, the 36-digit numeric group for the duplicate card-identifier **97** is matched in the 1-st datafile, and the 36-digit numeric group for the duplicate user-identifier **98** is matched in the 2-nd datafile, for matched status to sanction an anonymous validation. The 10-digit numeric group for the date-identifier is recorded in a 3-rd datafile for matched status. The 10-digits consist of 04-digits for the time and 06-digits for the date.

The 1-st datafile and 2-nd datafile of a card-type record **99** are used for recording and matching numeric groups with a constant order. Therefore, the constant numerals (36-digits) for an original and duplicate card-identifier **97** are matched in the database to complete a one-match sequence, and the constant numerals (04-digits) for an original and duplicate user-identifier **98** are matched in the database to complete a two-match sequence in a card-type server **96**.

The 2-nd modem sequence for the device operation **B6** comprises, receiving a set of numeric data from the card-type server **96** in an arranged order. The set of numeric data consists of a 18-digit numeric combination, divided into the following numeric groups for inbound transmission with point-of-origin identity:

Numeric	Identifier
09 – digits	site-identifiers
09 – digits	file-identifiers

The set of numeric data includes the impersonal site-identifier for server location **95** and terminal location **91** to form the two-way communication identifier for routing the set of numeric data to the computer terminal **80**. The set of numeric

data includes the file-identifier **99** to confirm that the duplicate card-identifier **97** and duplicate user-identifier **98** are matched or unmatched in the database of a card-type server **96**. Consequently, the computer terminal **80** receives an inbound set of numeric data accepting a matched file-identifier **99** or receives an inbound set of numeric data rejecting an unmatched file-identifier **99**.

The 4-th computer sequence for the device operation **B1+B3** comprises, instructing the display device **86** to display a screen message to accept or reject the personal card **120**, followed by a screen message to remove the personal card **120** from the computer terminal **80**.

A personal card **120** with matched status is a card accept and therefore valid for cardholder use, and a personal card **120** with unmatched status is a card reject and therefore invalid for cardholder use. The terminal operator hands over the valid personal card **120** to the impersonal user which entered the 04-digit number in the selected order 8642 at the computer terminal **80** to complete the anonymous validation.

The described device operations **B1** to **B6** are a preferred method to execute the primary function **(B)** using the computer terminal **80** in figure 08 and the communication network **90** in figure 09. The described modes of operation and sequences may be varied and are not precluded for executing the primary function **(B)** to generate a set of impersonal identifiers for an anonymous validation, according to the present invention.

Group 06 Is a preferred example for transaction use. The described 1-st modem sequence for the device operation **B6** comprises, transmitting the said set of numeric data in an arranged order with an additional 08-digit numeric group for a data-identifier which is recorded in the said card-type record **99**. The data-identifier is a transaction value for authorised payment within a credit limit at the card-type record 99 and is recorded in a 4-th datafile during an anonymous validation. The 08-digit numeric group is originated by the 1-st keyboard sequence for the device operation **B4** in advance of the 1-st sensor sequence for the device operation **B5.**

The 1-st keyboard sequence for the device operation **B4** comprises, entering the transaction value for data transfer to the computer device **80** in response to a computer sequence for **B1** to instruct the display device **86** to display a first screen message for the operator to enter the retail value on the

keyboard **87** and instruct the display device **86** to display a second screen message for the cardholder to enter a 04-digit number in a selected order on the sensor device **01**. The personal card **120** remains inserted in the computer terminal **80** at the 1st-stop position **44** in the guide device **40** to perform the device operation **B4** and subsequent device operations **B5** and **B6**.

Figures 20 and 21 show the external plan view and internal section detail of a computer terminal **140** for the device operations **B1, B3** and **B5** as previously referenced for the primary function **(B).**

In figure 20, the computer terminal **140** is shown encased by a moulded fascia **141**, incorporating a sensor device **01** and card-slot **41** and a moulded base **142** incorporating a cable connection, for fitting an external power and data cable **146** between the computer terminal **140** and a host computer **147** shown illustrated in figure 22. The moulded fascia **141** and moulded base **142** include side walls for abutment and location to form a terminal casing **143** comprising of two moulded parts which are bolted together, a bolt hole is located at each corner of the moulded base **142** with threaded inserts in the moulded fascia **141**

In figure 21, the terminal casing **143** includes internal moulded sections to form a guide device **40** with spaced apart guide grooves **43** in vertical alignment and engagement with each end of the transverse card-slot **41** to allow a card to be manually inserted in the computer terminal **140** with each card edge retained in each guide groove **43** to a 1st-stop position **44**.

At the 1st-stop position **44** a transverse stop-plate **144** is positioned underneath the guide grooves **43** and rigidly fixed to the moulded base **143**. A switch **46** and device board **46A** is shown and a light emitter (not shown) is offset mounted on the transverse stop-plate **144** to detect a card and illuminate a thermal coded area defined on the face of the card **100** or **120** and a scanner **48** and device board **48A** is shown offset mounted on a computer control board **145.** A chip reader/writer **53** is shown mounted between the side supports **42** and is offset mounted in vertical alignment with the integrated circuit **127** concealed in the laminate material **102** for a card **100** or exposed on the laminate material **121** for a card **120**, and is located in close proximity to the face of the card (without contact) at the 1st-stop position **44**. The chip reader/writer **53** is a transceiver incorporating an antenna to emit a specific frequency radio signal with a defined acquisition range and includes the decoder device board **53A** with power and data cables.

These modules are of known type for writing or reading discrete data **128** or writing and reading card-type codes **128** on an integrated circuit **127** to provide a read/write module **53** in the guide device **40** of the computer terminal **140** for a card **100** or a card **120**. The discrete data **128** is a facial image and the card-type code **128** is an issuer number.

The computer control board **145** is shown mounted to the moulded base **142** which includes integrated circuit components and electrical components with circuit connection to the device boards **01A, 53A, 46A, 48A** and emitter board (not shown), which collectively describes a computer device **140** to control the computer sequences (herein described) by computer programs for the device operations **B1**, **B2** and **B5**. The computer device **140** includes associated connector points for internal power and data cables and a connector for the external power and data cable **146** to the host computer **147.**

The computer device **140** includes programs for compiling numeric combinations to form sets of numeric data for individual site-identifiers, card-identifiers, user-identifiers, date-identifiers and data-identifiers for discrete card-types, and includes programs for decoding, decrypting and encrypting referred to herein for card-type codes and registration codes on individual cards for discrete card-types.

The computer terminal **140** further includes programs for writing and reading discrete data **128** and writing and reading card-type codes **128** on integrated circuits **127** and includes random access memory (RAM) for accessing encryption codes, communication identifiers and accessing a terminal register for recording and identifying card-type codes **104** and **128** to verify the card-issuer on every individual card for identification use or transaction use at the computer terminal **140.**

The computer terminal **140** includes a separate power source with plug adapter or uses the power source direct from the host computer **147**, which may be a personal computer or laptop computer with monitor, keyboard and modem, controlled by programs to transmit sets of numeric data and receive sets of numeric data for anonymous validations.

Figure 22 shows a diagrammatic layout of a communication network **150** for internet routing impersonal identifiers and instruction identifiers for discrete card-type between a terminal location **151** and a server location **156**. The terminal

location **151** is carrier-linked by a transmission line **152** to the internet depicted by the reference **153**, and the server location **156** is carrier-linked by a transmission pipe **154** to the internet **153** to form a basic infrastructure capable of expansion by replication.

The terminal location **151** includes at least one computer terminal **140** connected by a power and data cable **146** to a host computer **147** which is connected by modem cable **148** to the transmission line **152** for communication access to the internet **153** at the terminal location **151**.

The server location **156** includes at least one card-type server **157** connected by an internal cable **155** to the transmission pipe **154** for communication access to the internet **153** at the server location **156**. The server location **156** is capable of installing many card-type servers **157**, each connected by an internal cable **155** to the transmission pipe **154**.

The communication network **150** for discrete card-types is expanded by increasing the number of terminal locations **151** at different site addresses for installing a computer terminal **140** and host computer **147** at each terminal location **151**, a typical network of 500,000 computer terminals **140** is envisaged at 500,000 terminal locations **151** and each terminal location **151** has a dedicated transmission line **152** carrier-linked to the internet **153**.

The computer terminal **140** at the site address of each terminal location **151** is identified by a number and the card-type server **157** at the site address of the server location **156** is identified by a number, the two numbers are combined to form a 09-digit number and stored as a two-way communication identifier in each computer terminal **140** for routing a set of impersonal identifiers for a discrete card-type from the host computer **147** to the card-type server **157**, and for routing a set of instruction identifiers for the discrete card-type from the card-type server **157** to the host computer **147**. The communication identifier consists of a site-identifier for the server location **156** and a site-identifier for a terminal location **151**.

Consequently, each computer terminal **140** can store 200 communication identifiers for 200 card-type servers **157** at the server location **156** using the computer terminal **140** at 500,000 terminal locations **151**. A set of impersonal identifiers therefore includes at least, a site-identifier **156**, a card-identifier **97** and a user-identifier **98** for outbound transmission, and a set of instruction identifiers

includes at least, a site-identifier **151** and a file-identifier **99** for inbound transmission.

The internet **153** provides the infrastructure for routing the volume of transmissions between the terminal locations **151** and the server location **156** wherein the transmission line **152** for each terminal location **151** is identified by the terminal number, and the transmission pipe **154** for the server location **156** is identified by the server number for the internet routing of transmissions.

Each transmission is a two-way communication. The outbound transmission from a computer terminal **140** comprises of a set of numeric data in an arranged order to transmit a set of impersonal identifiers for recording or matching at a card-type server **157**, and the inbound transmission from a card-type server **157** comprises of a set of numeric data in an arranged order to receive a set of instruction identifiers for accepting or rejecting at the computer terminal **140** to complete one transmission.

The set of numeric data for an outbound and inbound transmission may vary in file size, for example 200 bytes of data, and therefore each transmission has a short duration, for example 02-seconds. A communication network **150** comprising of 500,000 terminals **140** and one server **157** for a discrete card-type is carrying millions of transmissions per hour. By increasing the number of terminals **140** for discrete card-types, the carrying capacity extends to an order of magnitude which may be replicated in every country for a global platform.

An embodiment of the present invention will now be described with reference to the arrangement of sequences listed below for each numbered group, in which a sequence group is selected to suit the card design for inserting in the guide device **40** to initiate the first sequence in any group. Consequently, the following description for each sequence group refers to receiving and identifying a card in the issued state and valid state and reading discrete data and encoded data carried on the valid card in the guide device **40**.

GROUP 07

1-st guide sequence for B2

1-st computer sequence for B1

2-nd computer sequence for B1

1-st sensor sequence for B5

3-rd computer sequence for B1

4-th computer sequence for B1

and

1-st display sequence for B3

1-st modem sequence for B6

2-nd modem sequence for B6

2-nd display sequence for B3

GROUP 08

1-st guide sequence for B2

1-st computer sequence for B1

2-nd computer sequence for B1

1-st sensor sequence for B5

3-rd computer sequence for B1

4-th computer sequence for B1

and

1-st display sequence for B3

2-nd display sequence for B3

1-st modem sequence for B6

2-nd modem sequence for B6

3-rd display sequence for B3

GROUP 09

1-st guide sequence for B2

1-st computer sequence for B1

2-nd computer sequence for B1

1-st sensor sequence for B5

3-rd computer sequence for B1

4-th computer sequence for B1

and

1-st display sequence for B3

1-st modem sequence for B6

2-nd modem sequence for B6

2-nd display sequence for B3

GROUP 10

1-st guide sequence for B2

1-st computer sequence for B1

2-nd computer sequence for B1

1-st sensor sequence for B5

3-rd computer sequence for B1

4-th computer sequence for B1

and

1-st display sequence for B3

2-nd display sequence for B3

1-st modem sequence for B6

2-nd modem sequence for B6

3-rd display sequence for B3

Group 07 There will now be described with reference to figures 13 and 14, a cardholder using the computer terminal **140** in combination with the host computer **147** to perform the primary function **(B)** using the communication network **150** shown in figure 22.

Figure 13 shows an impersonal card **100** in the issued state and valid state with a two-code image **110** for decoding and decrypting to generate a duplicate card-identifier **97** in the computer terminal **140** without reference to an individual person.

Figure 14 shows the sensor device **01** with a group of numerals in the selected order 7531 for encrypting, to generate a duplicate user-identifier **98** in the computer terminal **140** without reference to an individual person.

The device operations **B1**, **B2** and **B5** for the computer **140**, guide **40** and sensor **01**, are performed by the computer terminal **140**, according to an arranged order of sequences controlled by computer programs as set forth, by way of example.

The 1-st guide sequence for the device operation **B2** comprises, manually inserting the card **100** in the card-slot **41**, the card being guided by the grooves **43** to the 1st-stop position **44**. The switch **46** detects the guided card **100** and activates the scanner **48** to capture a two-code image **110** on the issued card **100**

for data transfer to the computer device**140**, and activates the chip reader/writer **53** to energise the concealed integrated circuit **127** for reading discrete data **128** in the memory of the integrated circuit **127**. The discrete data **128** is a facial image displayed on an external screen.

The 1-st computer sequence for the device operation **B1** comprises, receiving a bitmap of the two-code image **110** for decoding and decrypting the card-type code **104** to verify that the 06-digit number is recorded in the terminal register of the computer device **140** to identify the card-type.

The 2-nd computer sequence for the device operation **B1** comprises, accepting the card-type, reading the bitmap for decoding and decrypting the registration code **108** and compiling the 36-digit numeric combination into the numeric groups to form a duplicate card-identifier **97** with the same point-of-origin in the computer terminal **140**: 132474 604282516937 29486058 1615220802.

A program initiates the computer sequence for the device operation **B5** with the impersonal card **100** inserted in the computer terminal **140**. The sensor device **01** is described in figures 01 and 02 and an alternative sensor device **20** is described in figures 05 and 06. The sensor device **01** is shown fitted to the computer terminal **140** in figures 20 and 21 for the cardholder to enter a concealed group of numerals in a selected order.

In figure 14, the sensor device **01** shows an arrangement of illuminated discrete segments **15** in each touch zone **06** to display an individual numeral from zero to nine in each touch zone **06**. The referenced order **115**, **116**, **117** and **118** is used in figure 14 to input a 04-digit number in the selected order 7531 to describe the following sensor sequence and computer sequence.

The 1-st sensor sequence for the device operation **B5** comprises, energising the display element **13** in each touch zone **06** and illuminating discrete segments **15** for displaying the ten different numerals in a random order in each touch zone **06**, and detecting the finger contact in any touch zone **06** to locate the position of each numeral in the selected order 7531 on the active area of the touch screen **07** for data transfer to the computer device **140**. The display elements **13** are de-energised following the input of the 04-digit number to the computer device **140**.

The 04-digit number is personal information known only to the user and is an incomplete part of a 36-digit numeric combination unknown to the user to form

a duplicate user-identifier **98** in the computer device **80** without reference to the individual person. A specific operator instruction is performed by the display device **86** and on the keyboard device **87** for the device operations **B3** and **B4** to input the gender of the user for an impersonal user-identifier. In operation, the display device **86** instructs the operator to press the send key for a male user or press the send key for a female user to transmit the set of numeric data with a gender identifier (1 or 0) for recording or matching in the database of a card-type server in accordance with any of the described sequence groups 07 to 10 for validation.

The 3-rd computer sequence for the device operation **B1** comprises, receiving the 04-digit number and encrypt into a 36-digit numeric combination which is divided into the following numeric groups to form a duplicate user-identifier **98** with point-of-origin constancy:

Variant	Constant
09 – digits	7
09 – digits	5
09 – digits	3
09 – digits	1

The duplicate user-identifier **98** therefore consists of impersonal data in the form of a 36-digit numeric combination and each 09-digit numeric group consists of variant numerals with one constant numeral located therein, in the selected order according to its numerical value without reference to an individual person. The following example shows the underlined position of the constant numeral in each numeric group which forms part of the duplicate user-identifier **98** in the computer terminal **140**: 864870721 328451021 763020540 183248741

The 4-th computer sequence for the device operation **B1** comprises, compiling four numeric groups in the arranged order: 09-digits, 36-digits, 36-digits, 10-digits, to form a set of impersonal identifiers into a 91-digit numeric combination for data transfer from the computer terminal **140** to the host computer **147**.

The device operations **B3**, **B4** and **B6** for a display, keyboard and modem are performed by the host computer **147**, according to an arranged order of sequences controlled by computer programs as set forth, by way of example.

A program initiates the computer sequences for the device operation **B3**. The program enables the cardholder to read display information from the host computer **147** and use a pointing device such as a mouse, for identification use or

transaction use with the impersonal card **100** inserted in the computer terminal **140**. A typical selection of display information may comprise one or more of the following screen messages for any card in the issued state and valid state: insert card – remove card – card accept – card reject – user accept – user reject – press reset – enter value – enter number – press send – transaction accepted – transaction rejected.

The 1-st display sequence for the device operation **B3** comprises, displaying the screen messages, card accept – user accept, in response to the data transfer of the 91-digit numeric combination from the computer terminal **140** to the host computer **147**.

A program initiates the computer sequences for the device operation **B4**. The program enables the cardholder to enter keyboard information to the host computer **147** for identification use or transaction use with the impersonal card **100** inserted in the computer terminal **140**. Keyboard sequences are used according to program instructions where appropriate.

A program initiates the computer sequences for the device operation **B6** to transmit a set of numeric data and receive a set of numeric data for a discrete card-type using the modem in the host computer **147** wherein, a site-identifier **156**, a card-identifier **97**, a user-identifier **98** and a date-identifier are combined in an arranged order to form a set of impersonal identifiers for outbound transmission from the terminal location **151** to the server location **156** to locate a card-type record **99** for matching at the card-type server **157**, and wherein, a site-identifier **151** and a file-identifier **99** with matched status or unmatched status, are combined in an arranged order to form a set of instruction identifiers for inbound transmission from the server location **156** to the terminal location **151** accepting the card and user at the host computer **147** or rejecting the card and user at the host computer **147**.

The 1-st modem sequence for the device operation **B6** comprises, transmitting a set of numeric data in an arranged order. The set of numeric data consists of the 91-digit numeric combination, divided into the following numeric groups for outbound transmission with point-of-origin identity:

Numeric	Identifier
09 – digits	site-identifiers
36 – digits	card-identifier

36 – digits	user-identifier
10 – digits	date-identifier

The set of numeric data includes the impersonal site-identifier for server location **156** and terminal location **151** to form the two-way communication identifier for internet routing the set of numeric data to the database of the server **157** to locate the card-type record **99** wherein, the 36-digit numeric group for the duplicate card-identifier **97** is matched in the 1-st datafile, and the 36-digit numeric group for the duplicate user-identifier **98** is matched in the 2-nd datafile, for matched status to sanction an anonymous validation. The 10-digit numeric group for the date-identifier is recorded in a 3-rd datafile for matched status. The 10-digits consist of 04-digits for time and 06-digits for date.

The 1-st datafile and 2-nd datafile of a card-type record **99** are used for recording and matching numeric groups with a constant order. Therefore, the constant numerals (36-digits) for an original and duplicate card-identifier **97** are matched in the database to complete a one-match sequence, and the constant numerals (04-digits) for an original and duplicate user-identifier **98** are matched in the database to complete a two-match sequence in a card-type server **157**.

The 2-nd modem sequence for the device operation **B6** comprises, receiving a set of numeric data from the card-type server **157** in an arranged order. The set of numeric data consists of a 18-digit numeric combination, divided into the following numeric groups for inbound transmission with point-of-origin identity:

Numeric	Identifier
09 – digits	site-identifiers
09 – digits	file-identifiers

The set of numeric data includes the impersonal site-identifier for server location **156** and terminal location **151** to form the two-way communication identifier for internet routing the set of numeric data to the host computer **147**. The set of numeric data includes the file-identifier **99** to confirm that the duplicate card-identifier **97** and duplicate user-identifier **98** are matched or unmatched in the database of a card-type server **157**. Consequently, the host computer **147** receives an inbound set of numeric data accepting a matched file-identifier **99** or receives an inbound set of numeric data rejecting an unmatched file-identifier **99**.

The 2-nd display sequence for the device operation **B3** comprises, displaying the screen messages – transaction accepted or transaction rejected, followed by the screen message to remove the impersonal card **100** from the computer terminal **140**. An impersonal card **100** with matched status is a card accept and therefore valid for cardholder use, and an impersonal card **100** with unmatched status is a card reject and therefore invalid for cardholder use. The cardholder removes the impersonal card **100** from the computer terminal **140** to complete the primary function **(B)**.

In combination, the device operations **B1**, **B2** and **B5** for the computer terminal **140** and device operations **B3**, **B4** and **B6** for the host computer **147** are a preferred method to execute the primary function **(B)** using the communication network **150** in figure 22. The described modes of operation and sequences may be varied and are not precluded for executing the primary function **(B)** to generate a set of impersonal identifiers for an anonymous validation, according to the present invention.

Group 08 Is a preferred example for transaction use. The described 1-st modem sequence for the device operation **B6** comprises, transmitting the said set of numeric data in an arranged order with an additional 08-digit numeric group for a data-identifier which is recorded in the said card-type record **99**. The data-identifier is a transaction value for authorised payment within a credit limit at the card-type record **99** and is recorded in a 4-th datafile during an anonymous validation. The 08-digit numeric group is originated at the host computer **147**.

A 3-rd display sequence for the device operation **B3** comprises, displaying the screen message – 50.00 GBP, the cardholder uses the mouse to accept or reject the transaction value displayed on the screen. Alternatively, the cardholder uses a keyboard sequence to enter the transaction value.

Group 09 There will now be described with reference to figures 18 and 19, a cardholder using the computer terminal **140** in combination with the host computer **147** to perform the primary function **(B)** using the communication network **150** shown in figure 22.

Figure 18 shows a personal card **120** in the issued state and valid state with a one-code image **133** for decoding and decrypting to generate a duplicate card-identifier **97** in the computer terminal **140** without reference to an individual person.

Figure 19 shows the sensor device **01** with a group of numerals in the selected order 8642 for encrypting, to generate a duplicate user-identifier **98** in the computer terminal **140** without reference to an individual person.

The device operations **B1**, **B2** and **B5** for the computer **140**, guide **40** and sensor **01**, are performed by the computer terminal **140**, according to an arranged order of sequences controlled by computer programs as set forth, by way of example.

The 1-st guide sequence for the device operation **B2** comprises, manually inserting the card **120** in the card-slot **41**, the card being guided by the grooves **43** to the 1st-stop position **44**. The switch **46** detects the guided card **120** and activates the scanner **48** to capture a one-code image **133** on the issued card **120** for data transfer to the computer device **140**, and activates the chip reader/writer **53** to energise the concealed integrated circuit **127** for reading the card-type code **128** in the memory of the integrated circuit **127**. The card-type code **128** is impersonal information recorded on a personal card **120** by the card-issuer.

The 1-st computer sequence for the device operation **B1** comprises, receiving the stored data **128** for decoding and decrypting the card-type code **128** to verify that the 06-digit number is recorded in the terminal register of the computer device **140** to identify the card-type.

The 2-nd computer sequence for the device operation **B1** comprises, accepting the card-type, reading the bitmap for decoding and decrypting the registration code **131** and compiling the 36-digit numeric combination into the numeric groups to form a duplicate card-identifier **97** with the same point-of-origin in the computer terminal **140**:548720 315874510368 59723054 0925130802.

A program initiates the computer sequence for the device operation **B5** with the personal card **120** inserted in the computer terminal **140.** The sensor device **01** is described in figures 01 and 02 and an alternative sensor device **20** is described in figures 05 and 06. The sensor device **01** is shown fitted to the computer terminal **140** in figures 20 and 21 for the cardholder to enter a concealed group of numerals in a selected order.

In figure 19, the sensor device **01** shows an arrangement of illuminated discrete segments **15** in each touch zone **06** to display an individual numeral from zero to nine in each touch zone **06**. The referenced order **135**, **136**, **137** and **138** is

used in figure 19 to input a 04-digit number in the selected order 8642 to describe the following sensor sequence and computer sequence.

The 1-st sensor sequence for the device operation **B5** comprises, energising the display element **13** in each touch zone **06**, illuminating discrete segments **15** for displaying the ten different numerals in a random order in each touch zone **06**, and detecting the finger contact in any touch zone **06** to locate the position of each numeral in the selected order 8642 on the active area of the touch screen **07** for data transfer to the computer device **140**. The display elements **13** are de-energised following the input of the 04-digit number to the computer device **140**.

The 04-digit number is personal information known only to the user and is an incomplete part of a 36-digit numeric combination unknown to the user to form a duplicate user-identifier **98** in the computer device **80** without reference to the individual person. A specific operator instruction is performed by the display device **86** and on the keyboard device **87** for the device operations **B3** and **B4** to input the gender of the user for an impersonal user-identifier. In operation, the display device **86** instructs the operator to press the send key for a male user or press the send key for a female user to transmit the set of numeric data with a gender identifier (1 or 0) for recording or matching in the database of a card-type server in accordance with any of the described sequence groups 07 to 10 for validation.

The 3-rd computer sequence for the device operation **B1** comprises, receiving the 04-digit number and encrypting it into a 36-digit numeric combination which is divided into the following numeric groups to form a duplicate user-identifier **98** with point-of-origin constancy:

Variant	Constant
09 – digits	8
09 – digits	6
09 – digits	4
09 – digits	2

The duplicate user-identifier **98** therefore consists of impersonal data in the form of a 36-digit numeric combination and each 09-digit numeric group consists of variant numerals with one constant numeral located therein, in the selected order according to its numerical value without reference to an individual person. The following example shows the underlined position of the constant numeral in

each numeric group which forms part of the duplicate user-identifier **98** in the computer terminal **140**: 47036148<u>1</u> 325496<u>8</u>54 025<u>4</u>20493 2<u>2</u>6742168

The 4-th computer sequence for the device operation **B1** comprises, compiling four numeric groups in the arranged order: 09-digits, 36-digits, 36-digits, 10-digits, to form a set of impersonal identifiers into a 91-digit numeric combination for data transfer from the computer terminal **140** to the host computer **147**.

The device operations **B3**, **B4** and **B6** for a display, keyboard and modem are performed by the host computer **147**, according to an arranged order of sequences controlled by computer programs as set forth, by way of example.

A program initiates the computer sequences for the device operation **B3**. The program enables the cardholder to read display information from the host computer **147** and use a pointing device such as a mouse, for identification use or transaction use with the personal card **120** inserted in the computer terminal **140**. A typical selection of display information may comprise one or more of the following screen messages for any card in the issued state and valid state: insert card – remove card – card accept – card reject – user accept – user reject – press reset – enter value – enter number – press send – transaction accepted – transaction rejected.

The 1-st display sequence for the device operation **B3** comprises, displaying the screen messages, card accept – user accept, in response to the data transfer of the 91-digit numeric combination from the computer terminal **140** to the host computer **147**.

A program initiates the computer sequences for the device operation **B4**. The program enables the cardholder to enter keyboard information to the host computer **147** for identification use or transaction use with the personal card **120** inserted in the computer terminal **140**. Keyboard sequences are used according to program instructions where appropriate.

A program initiates the computer sequences for the device operation **B6** to transmit a set of numeric data and receive a set of numeric data for a discrete card-type using the modem in the host computer **147** wherein, a site-identifier **156**, a card-identifier **97**, a user-identifier **98** and a date-identifier are combined in an arranged order to form a set of impersonal identifiers for outbound transmission from the terminal location **151** to the server location **156** to locate a card-type record **99** for matching at the card-type server **157**, and wherein, a site-identifier

151 and a file-identifier **99** with matched status or unmatched status, are combined in an arranged order to form a set of instruction identifiers for inbound transmission from the server location **156** to the terminal location **151** accepting the card and user at the host computer **147** or rejecting the card and user at the host computer **147**.

The 1-st modem sequence for the device operation **B6** comprises, transmitting a set of numeric data in an arranged order. The set of numeric data consists of the 91-digit numeric combination, divided into the following numeric groups for outbound transmission with point-of-origin identity:

Numeric	Identifier
09 – digits	site-identifiers
36 – digits	card-identifier
36 – digits	user-identifier
10 – digits	date-identifier

The set of numeric data includes the impersonal site-identifier for server location **156** and terminal location **151** to form the two-way communication identifier for internet routing the set of numeric data to the database of the server **157** to locate the card-type record **99** wherein, the 36-digit numeric group for the duplicate card-identifier **97** is matched in the 1-st datafile, and the 36-digit numeric group for the duplicate user-identifier **98** is matched in the 2-nd datafile, for matched status to sanction an anonymous validation. The 10-digit numeric group for the date-identifier is recorded in a 3-rd datafile for matched status. The 10-digits consist of 04-digits for time and 06-digits for date.

The 1-st datafile and 2-nd datafile of a card-type record **99** are used for recording and matching numeric groups with a constant order. Therefore, the constant numerals (36-digits) for an original and duplicate card-identifier **97** are matched in the database to complete a one-match sequence, and the constant numerals (04-digits) for an original and duplicate user-identifier **98** are matched in the database to complete a two-match sequence in a card-type server **157**.

The 2-nd modem sequence for the device operation **B6** comprises, receiving a set of numeric data from the card-type server **157** in an arranged order. The set of numeric data consists of a 18-digit numeric combination, divided into the following numeric groups for inbound transmission with point-of-origin identity:

Numeric	Identifier
09 – digits	site-identifiers
09 – digits	file-identifiers

The set of numeric data includes the impersonal site-identifier for server location **156** and terminal location **151** to form the two-way communication identifier for internet routing the set of numeric data to the host computer **147**. The set of numeric data includes the file-identifier **99** to confirm that the duplicate card-identifier **97** and duplicate user-identifier **98** are matched or unmatched in the database of a card-type server **157**. Consequently, the host computer **147** receives an inbound set of numeric data accepting a matched file-identifier **99** or receives an inbound set of numeric data rejecting an unmatched file-identifier **99**.

The 2-nd display sequence for the device operation **B3** comprises, displaying the screen messages – transaction accepted or transaction rejected, followed by the screen message to remove the personal card **120** from the computer terminal **140**. A personal card **120** with matched status is a card accept and therefore valid for cardholder use, and a personal card **120** with unmatched status is a card reject and therefore invalid for cardholder use. The cardholder removes the personal card **120** from the computer terminal **140** to complete the primary function **(B)**.

In combination, the device operations **B1**, **B2** and **B5** for the computer terminal **140** and device operations **B3**, **B4** and **B6** for the host computer **147** are a preferred method to execute the primary function **(B)** using the communication network **150** in figure 22. The described modes of operation and sequences may be varied and are not precluded for executing the primary function **(B)** to generate a set of impersonal identifiers for an anonymous validation, according to the present invention.

Group 10 Is a preferred example for transaction use. The described 1-st modem sequence for the device operation **B6** comprises, transmitting the said set of numeric data in an arranged order with an additional 08-digit numeric group for a data-identifier which is recorded in the said card-type record **99**. The data-identifier is a transaction value for authorised payment within a credit limit at the card-type record **99** and is recorded in a 4-th datafile during an anonymous validation. The 08-digit numeric group is originated at the host computer **147**.

A 3-rd display sequence for the device operation **B3** comprises, displaying the screen message – 50.00 GBP. The cardholder uses the mouse to accept or reject the transaction value displayed on the screen. Alternatively, the cardholder uses a keyboard sequence to enter the transaction value.

The identification system in all its aspects can be modified in many ways for card design and terminal design. The card design for an impersonal card **100** can consist of a one-part card in the unissued state and include an integrated circuit **127** with a one-code image **133**. The card design for a personal card **120** can display a two-code image **110** and conceal the integrated circuit **127**, and comprise of a two-part card **120** including a counterpart card **101.** Any card design can include fan-fold attachments for machine printing and terminal printing. The front face of the laminate material **102** and **121** for a counterpart card may consist of a form layout for writing information thereon in the unissued state or issued state. Alternatively, separate application forms may be used for writing information thereon.

The sequence groups 01 to 10 describe the preferred embodiments for registering and validating a set of impersonal identifiers for an impersonal card **100** or a personal card **120** to summarise the inventive concept. The transmission sequences performed by the guide device **40** for the internal data transfer of discrete data **128**, card-type codes **128** and encoded data **109** and **132** as described herein can also be used for writing and reading concealed data in the laminate materials **102** or **121** at the 1st-stop position **44**, instead of printing and scanning images **106** and **110** in the thermal coded area **105** on a card **100**, and instead of printing and scanning images **129** and **133** in the thermal coded area **130** on a card **120**.

Card designs may be adapted for printing ancillary data **111** in the panel area **107** in the form of characters and symbols for lottery and promotion cards, and in particular, adapted for issuing debit cards in post offices. The variety of card-types extend to identification uses and transaction uses in financial services for retail and social and including security applications.

The guide device **40** can be adapted to include alternative printer means **62** for use with ribbon cassettes and ink or toner cartridges. Alternative drive means **50** can be used for transporting fan-fold material **102** and **121** in the ascent mode

only. A suitable container for storing said material is positioned below the drive means **50** with a card-slot **41** above the drive means **50**.

The computer terminals **80** and **140** are intended for security applications and are therefore sealed and include security features to cause controlled shutdown through forced access and all programs and stored data for originating and generating card-identifiers, user-identifiers, site identifiers, date identifiers and data-identifiers and including the card-type codes in the terminal register are erased from memory rendering the terminals useless and worthless. The said terminals are intended for electronic registration and validation in post offices, retail outlets, offices, terminus, airports, service stations and the like, and therefore vary in type and size, with and without attendant operation.

The devices described herein can be rearranged in suitable casings to provide cabinets and consoles for identification card-types and transaction card-types for use in automated teller machines, airport check-in machines, transport dispensing machines, security systems and the like. Small casing designs incorporating a guide device **40** with a 1st-stop function as shown in the computer terminal **140** may include telephone handsets, display screens, keyboards, receivers and speakers for use as laptops, mobile phones and video phones. In this portable form, the computer terminal **140** incorporates electrical components and integrated circuits for independent operation and may include battery power as well as mains power.

The card-design may be in the form of bank drafts and giro forms, airline tickets and boarding cards, season tickets and permits, licences and passports, visas, identity cards and medical cards, electronic display cards for vehicle toll charging and vehicle ignition cards, all of which are intended for electronic registration at a computer terminal **80** on public counters and for electronic validation at a computer terminal **140** in private homes and offices including public buildings. The electronic registration of excise cards may be displayed on vehicles for monitoring and tracking on public highways.

Claims:

1. A card-based system for originating impersonal identifiers for an unissued card in a terminal which can communicate with a database, said system comprising at least one terminal including means for receiving and identifying a card in its unissued state, computing means for originating an impersonal card-identifier and recording a registration code on the card, input means enabling a user to input to said computing means selected characters, said input means including a plurality of zones, which are operable by the user to cause input of the selected characters, said zones being arranged such that the character with which each zone is associated can change each time a card is received by the receiving and identifying means, said input characters being used for originating an impersonal user-identifier, and means for transmitting the impersonal identifiers to said database for recording an original set of identifiers for a card and user without reference to an individual person.

2. A card-based system according to claim 1, wherein the terminal includes means to encrypt the original card-identifier into a registration code for recording on or in the card.

3. A card-based system according to claims 1 and 2, wherein the said terminal includes means for printing the registration code on the card and means for scanning the registration code on the card.

4. A card-based system according to claim 3, wherein the registration code is an encoded image produced by thermal printing.

5. A card-based system according to claims 1 and 2, wherein the said terminal includes means for writing the registration code to the card and means for reading the registration code in the card.

6. A card-based system according to claim 5, wherein the registration code is stored in the memory of an integrated circuit enveloped by material layers.

7. A card-based system for generating impersonal identifiers for an issued card in a terminal which can communicate with a database, said system comprising at least one terminal including means for receiving and identifying a card in its issued state, computing means for decrypting the registration code recorded on the card to generate an impersonal card-identifier, input means enabling a user to input to said computing means selected characters, said input means including a plurality of zones, which are operable by the user to cause input of the selected characters, and said zones being arranged such that the character with which each zone is associate can change each time a card is received by the receiving and identifying means, said input characters being used for originating an impersonal user-identifier, and means for transmitting the impersonal identifiers to said database for matching a duplicate set of identifiers for a card and user without reference to an individual person.

8. A card-based system according to any preceding claim, wherein the database is at a server located remotely from the or each terminal.

9. A card-based system according to any preceding claim, wherein the receiving and identifying means comprises a guide for guiding the card to selected positions for printing and scanning and to selected positions for writing and reading.

10. A card-based system according to any preceding claim, wherein each card has recorded thereon data indicative of the card-type and the terminal includes means for identifying said data to enable the computing means to verify the card-type.

11. A card-based system according to any preceding claim, wherein each card includes an integrated circuit for storing in memory discrete data, and said terminal includes means for writing and reading the discrete data to the integrated circuit.

12. A card-based system according to claim 11, wherein the integrated circuit is concealed in the card.

13. A card-based system according to claims 11 and 12, wherein the discrete data is a representation of a concealed facial image.

14. A card-based system according to any preceding claim, where each zone is arranged to display said characters.

15. A card-based system according to claim 14, wherein the character displayed by each zone is visible only within a restricted viewing angle.

16. A card-based system according to claim 14 or claim 15, wherein each zone is touch sensitive and is operable by a user placing a finger or object thereon.

17. A card-based system according to any preceding claim, wherein the zones are arranged in rows and columns.

18. A card-based system according to any one of claims 14 to 17, wherein each zone is arranged to display a numeral.

19. A card-based system according to any one of claims 14 to 18, wherein each zone includes a filter.

20. A card-based system according to any preceding claim, wherein the or each

terminal includes or has associated therewith display means for displaying messages and instructions and keyboard means for inputting data.

21. A card-based system for transmitting numeric data from any terminal location to any server location wherein, the terminal includes means to compile and transmit a constant set of numeric data for recording a set of impersonal identifiers in a database, and compile and transmit a constant set of numeric data for matching a set of impersonal identifiers in a database.

22. A card-based system according to claim 21, wherein the numeric data for a card-identifier has a constant order for recording or matching in a database at a server location.

23. A card-based system according to claim 21, wherein the numeric data for a user-identifier has a constant order for recording or matching in a database at a server location.

24. A card-based system according to claim 21, wherein the numeric data include a numeral to record the gender of the user-identifier in a database at a server location.

25. A card-based system according to claim 21, wherein the numeric data includes a site-identifier for a terminal location and a server location, for two-way communication.

26. A card-based system according to claim 21, wherein the numeric data includes a date-identifier to record the day and time at a server or terminal location.

27. A card-based system according to claim 21, wherein the numeric data

includes a data-identifier to record a transaction value at the server location.

28. A card-based system according to claim 21, wherein the numeric data includes a file-identifier to record an accept or reject condition at the server or terminal location.

29. A card-based system according to claim 21, wherein the numeric data is enciphered and deciphered by changing and reverting the order and value of a numeric combination at a terminal location and a server location.

30. A card-based system according to claim 7, wherein each terminal has associated therewith a host computer to which the terminal can transfer numeric data for transmission to the server database.

31. A card-based system according to any preceding claim including a plurality of terminals which can undergo two-way communication with a plurality of servers.

32. A card-based system which can generate a set of impersonal identifiers for an issued card in a computer terminal having an associated host computer for matching at a card-type server, wherein the system comprises

a) a terminal which incorporates means for receiving and identifying an impersonal card in an issued state, means for capturing a first image on the card for input to computing means which can decode and decrypt the image to generate an impersonal card-identifier in the terminal,

b) the terminal including sensor means with touch zones for illuminating an arrangement of segments in each touch zone to display within a restricted viewing angle, a random order of characters for a user to enter a concealed group of characters in a selected order for input to the computer to enable said computer to generate an impersonal user-identifier in the terminal,

c) the terminal being arranged to transfer the impersonal card-identifier and impersonal user-identifier to a host computer and

d) the host computer incorporates a modem to transmit a set of impersonal identifiers to locate a card-type record in the database of the card-type server for comparing the set of impersonal identifiers with data in the database, said modem being arranged to receive in response a set of instruction identifiers from the host computer indicative of the validity of the card and user.

33. A card-based system as claimed in claim 32, wherein all the data transmitted between the host computer and the server is in numeric form.

34. A card-based system comprising a network of computer terminals and a network of card-type servers which form separate communication networks for discrete card-types, and each network including integral means for originating impersonal identifiers at any computer terminal and for recording impersonal identifiers at the card-type server, said integral means for originating and recording the set of impersonal identifiers for an unissued card-type comprising:

a) means to receive and identify a card-type in the unissued state in a terminal,

b) means in the terminal to write discrete data to an integrated circuit incorporated in the card,

c) means in the terminal to originate an impersonal card-identifier for the card,

d) means in the terminal to originate an encrypted registration code for encoding and recording on the card,

e) means in the terminal to input a group of numerals and originate an impersonal user-identifier for the card,

f) means to transmit a set of impersonal identifiers for the card-type to a card-type server,

g) means to create a card-type record in the database of a card-type server

for recording the set of impersonal identifiers, and

h) means to transmit a set of instruction identifiers to the terminal to indicate the validity of the card and the user.

35. A card-based system comprising a network of computer terminals and a network of card-type servers which form separate communication networks for discrete card-types, and each network including integral means for generating impersonal card-identifiers at any computer terminal and matching impersonal identifiers at the card-type server, the integral means for generating and matching a set of impersonal identifiers for an issued card-type comprising:

a) means to receive and identify a card-type in the issued state in a terminal,

b) means in the terminal to read discrete data on an integrated circuit incorporated in the card,

c) means in the terminal to decode and decrypt a registration code on the card to generate an impersonal card-identifier,

d) means in the terminal to input a group of numerals and generate an impersonal user-identifier for the card,

e) means to transmit a set of impersonal identifiers for the card-type to a card-type server,

f) means to locate a card-type record in the database of the card-type server for matching the set of impersonal identifiers, and

g) means to transmit a set of instruction identifiers to the terminal to indicate the validity of the card and the user.

36. A card-based system according to any preceding claim including a security centre which is arranged to transmit a two-way communication identifier for each terminal location and each server location to a router centre to provide network interconnection and to download the communication identifiers together with encryption codes to each computer terminal and each card-type server for routing

encrypted impersonal identifiers and instruction identifiers between the designated locations, and wherein security centre can communicate through the router centre for monitoring and upgrading each computer terminal at its designated location.

37. A card-based system according to any preceding claim, wherein each set of impersonal identifiers and each set of instructions identifiers for a discrete card-type includes a two-way communication identifier for identifying the terminal location and server location, and address each set of impersonal identifiers and instruction identifiers to create a card-type record in the database of a card-type server for anonymous registration at a data centre, or to locate a card-type record in the database of the same card-type for anonymous validation at the data centre.

38. A card-based system according to any preceding claim including separate data centres to provide demarcation and anonymity for the transfer of complied data from a data centre with impersonal records to a data centre with personal records, wherein the data centre with impersonal records includes a card-type server for matching a set of impersonal identifiers in a card-type record to compile data to validate an identification or transaction at the data centre, and transfer the compiled data to the data centre of a discrete card-issuer with personal records, the compiled data is impersonal and includes a reference number and activity record for the card-issuer to enter the compiled data in a personal record with the same reference number.

39. A card-based system according to claim 1, wherein an attendant inserts an unissued card in the receiving and identifying means, said computing means originates an impersonal card-identifier, the user operates said input means to input selected characters known only to the user, said computing means processes the input characters to originate an impersonal user-identifier and said terminal transmits said impersonal identifiers to said database for recording an original set of impersonal identifiers therein.

40. A card-based system according to claim 39 wherein said terminal receives instruction identifiers from the database to accept or reject the impersonal identifiers and instruct the attendant to remove the card from said terminal to keep an invalid card or hand a valid card to the user.

41. A card-based system according to claim 7, wherein an attendant inserts an issued card in the receiving means, and identifying said computer means generates the impersonal card-identifier, the user operates said input means to input selected characters known only to the user, said computing means processes the input characters to originate an impersonal user-identifier, and said terminal transmits said impersonal identifiers to said database for matching a duplicate set of impersonal identifiers therein.

42. A card-based system according to claim 39 and 41, wherein a duplicate set of impersonal identifiers are compared with an original set of impersonal identifiers in the same database of a card-type server.

43. A card-based system according to claim 39 or 41, wherein the impersonal identifiers and instruction identifier are solely in numeric form.

44. A card-based system for impersonal cards, wherein the card is constructed of laminate material comprising two outer layers bonded to a middle layer for concealing an integrated circuit and aerial within the middle layer for writing and reading data in the receiving and identifying means.

45. A card-based system according to claim 44 wherein the middle layer comprises a material with inductance and or capacitance properties to supply an electric charge to power the integrated circuit when the card is inserted in the receiving and identifying means.

46. A card-based system according to claim 44 wherein the laminate material includes a printed overlay film on the outer surface of each outer layer to display machine printed information for different card-types.

47. A card-based system according to claims 44 and 46, wherein the laminate material includes a thermal layer affixed thereto for terminal printing thermal images and characters in defined areas for different card-types.

49. A card-based system according to claim 47 wherein the thermal layer includes a passive circuit on the underside to detect the said circuit when a card-type is inserted in the receiving and identifying means.

FIG 01

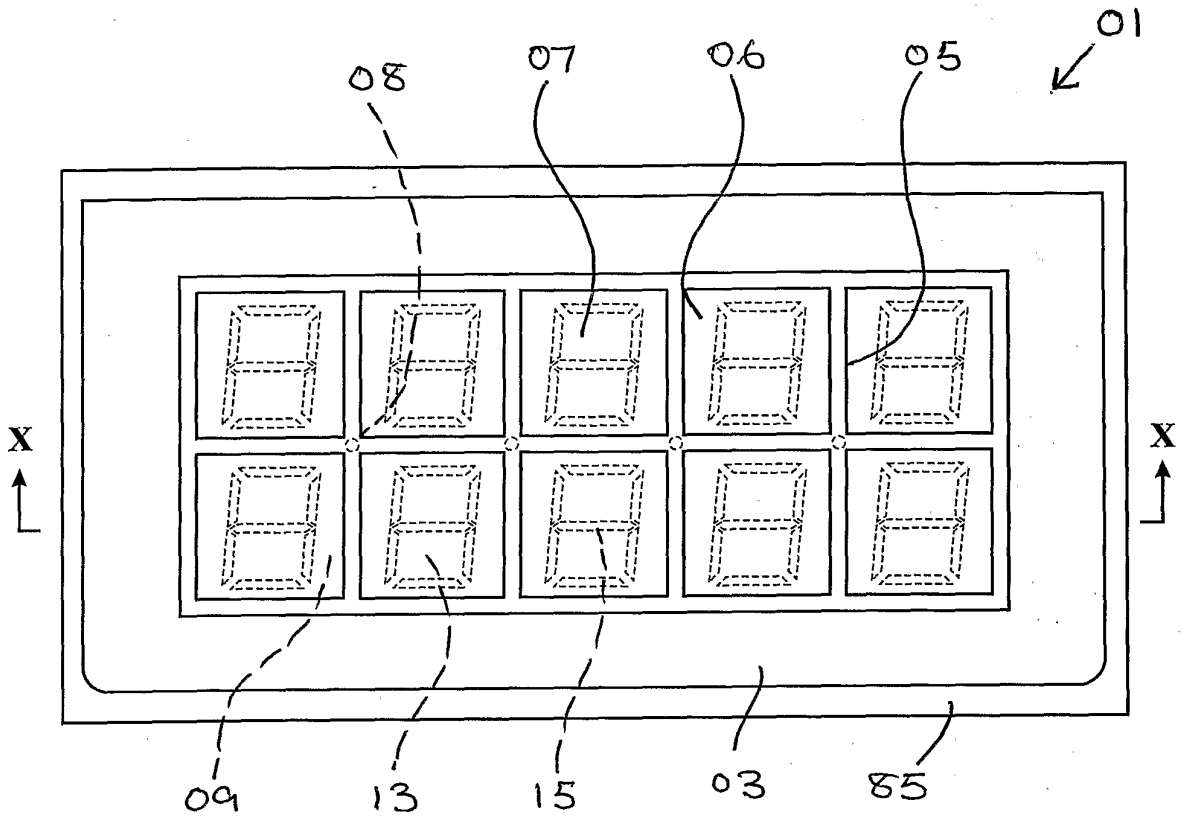

FIG 02

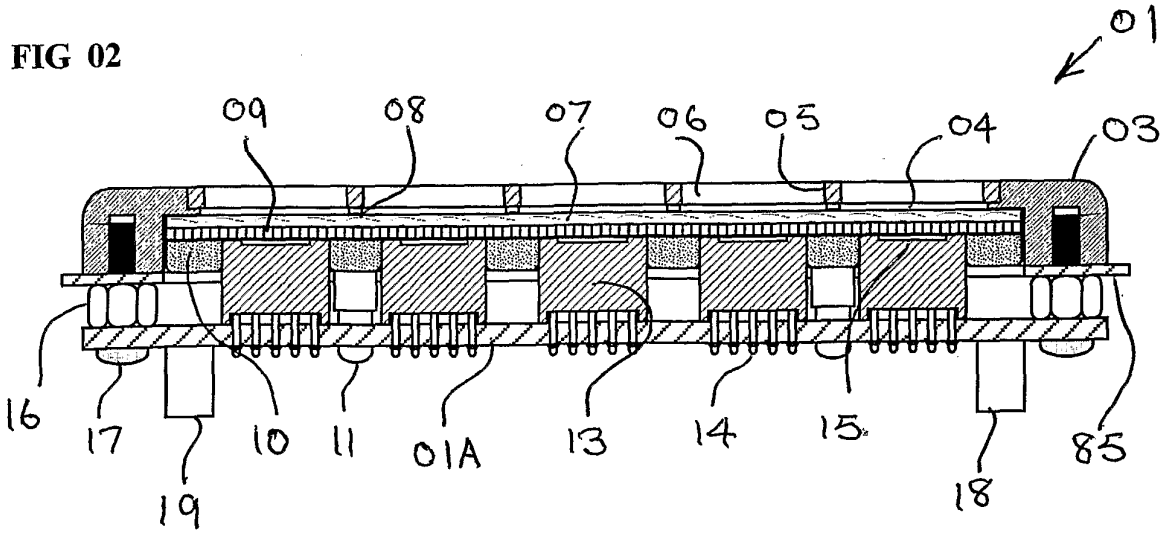

X - X

FIG 03

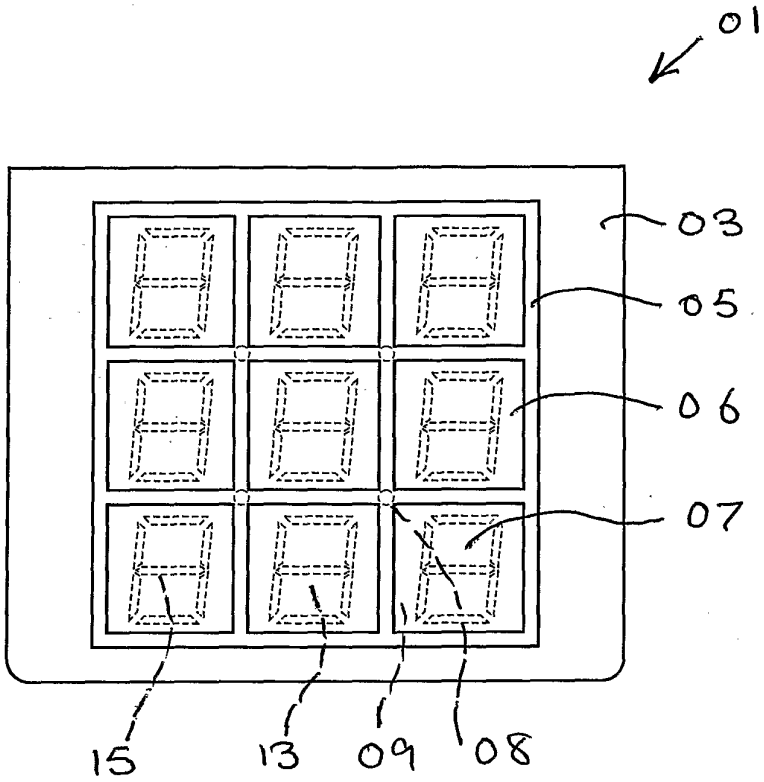

FIG 04

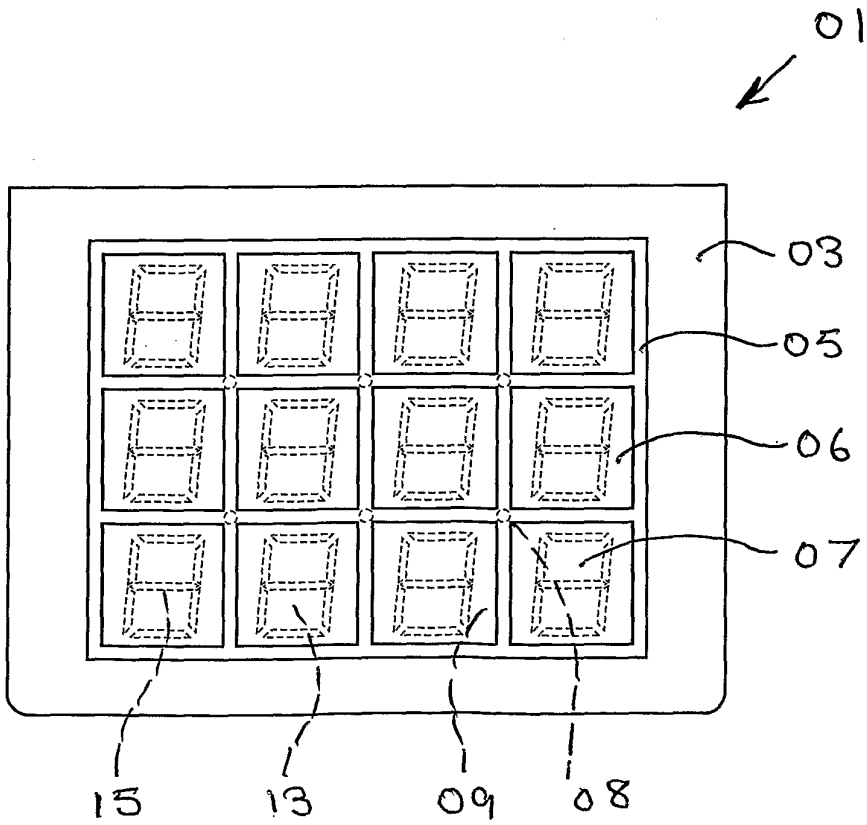

FIG 05

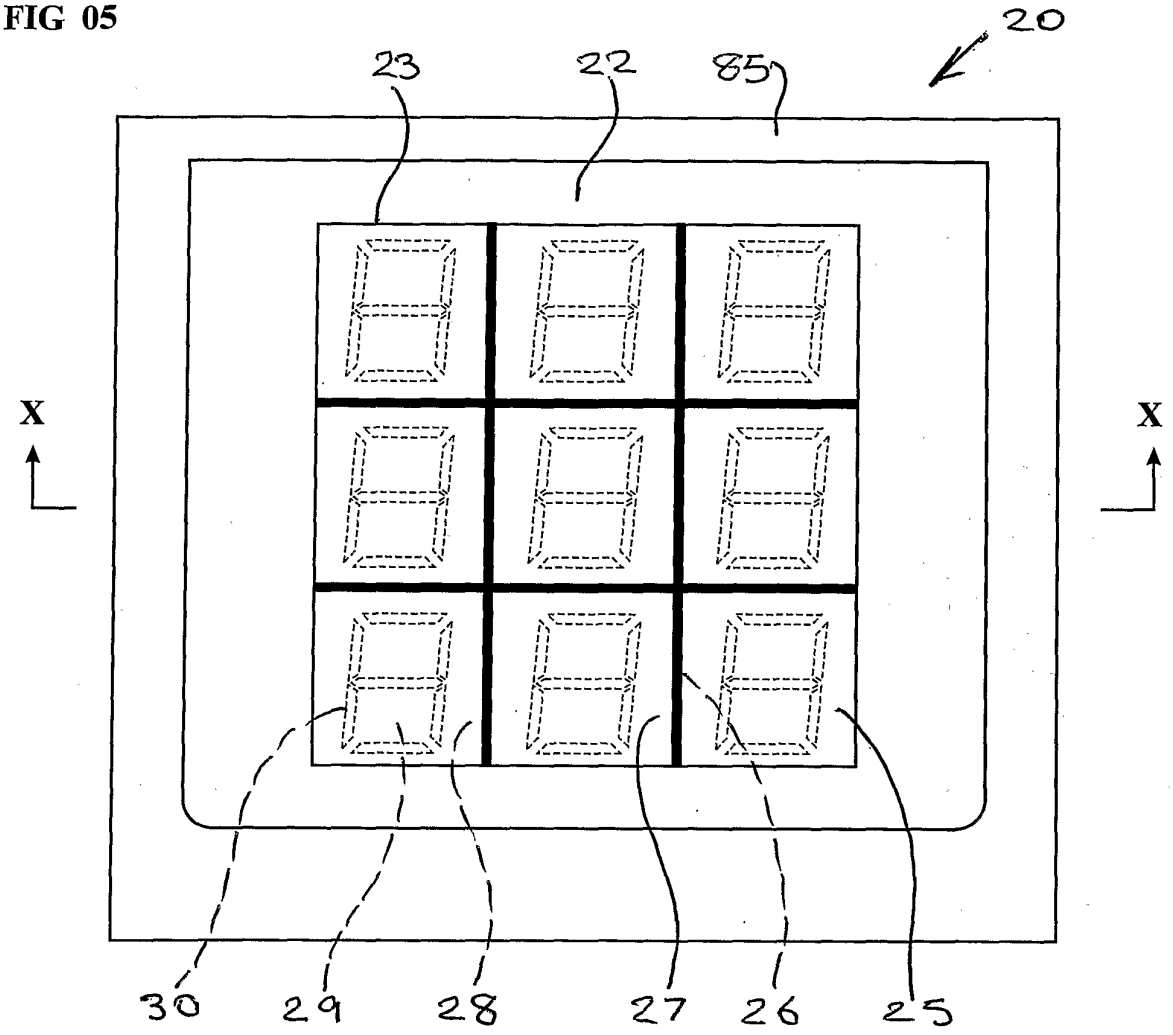
20
23
22
85
X
X
30
29
28
27
26
25

FIG 06

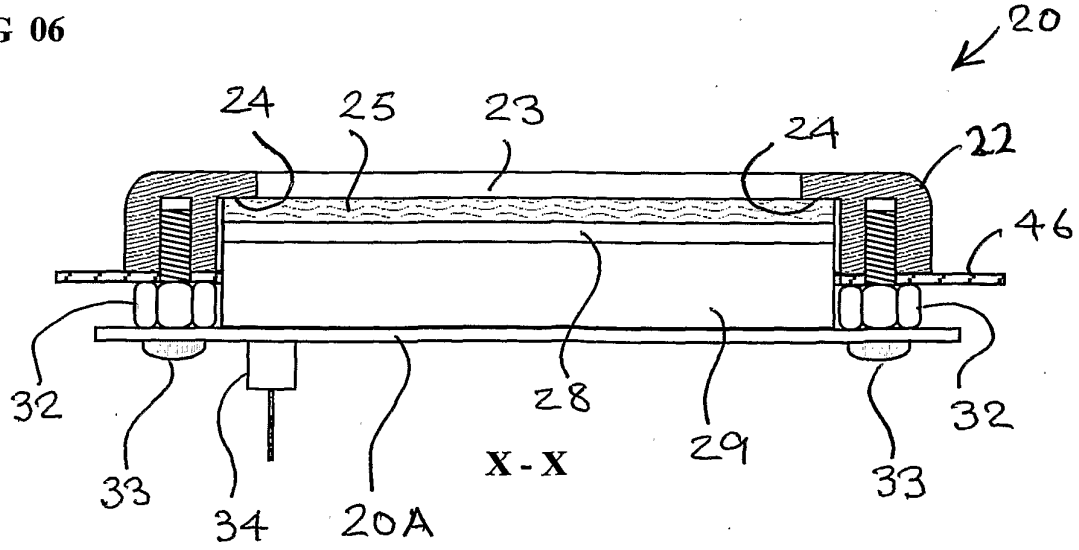
20
24
25
23
24
22
46
32
28
29
32
33
34
20A
X-X
33

FIG 07

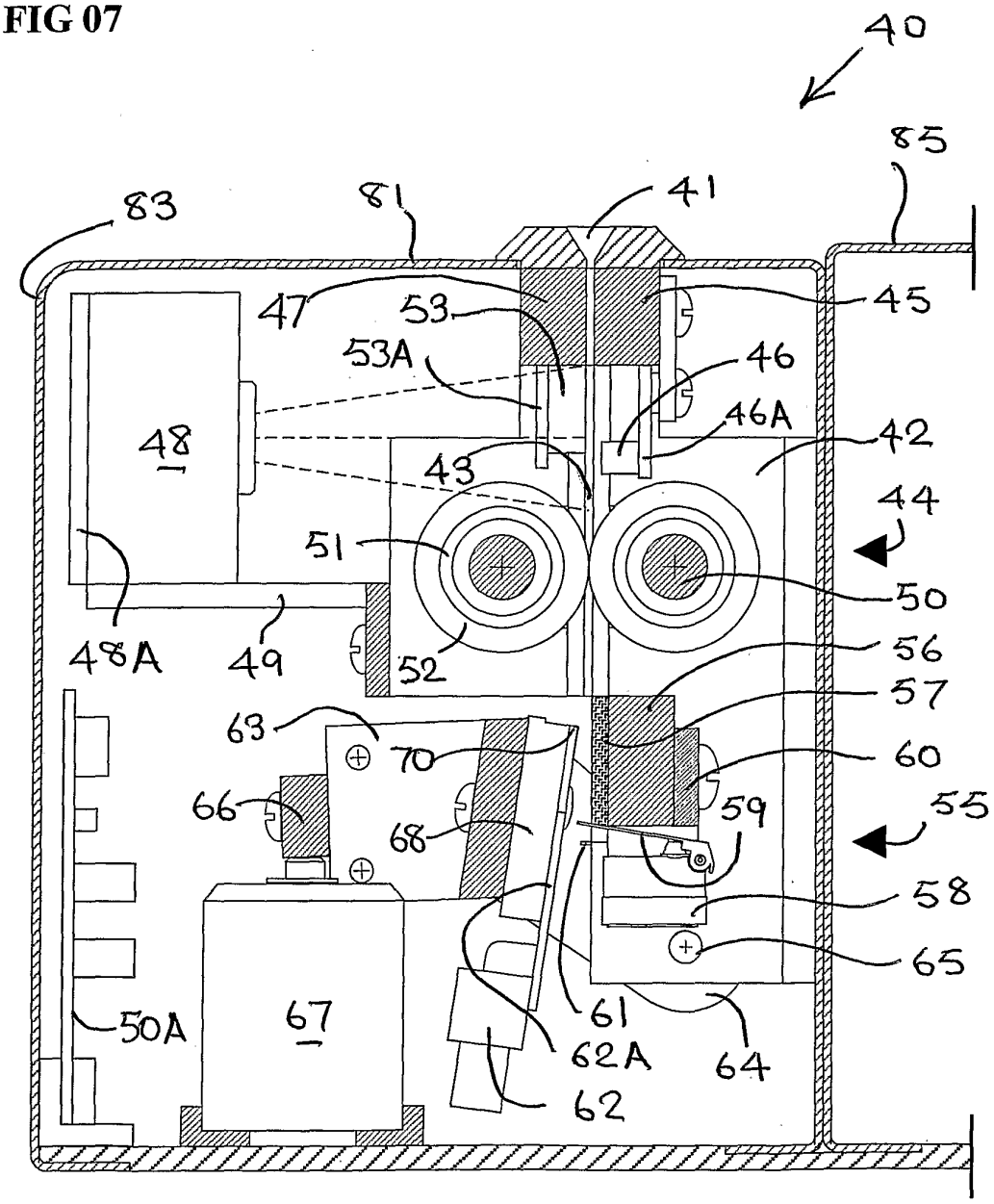
40
85
83
81
41
47
53
45
53A
46
46A
48
42
43
44
51
50
48A
49
52
56
57
63
70
60
66
68
59
55
58
65
50A
67
61
62A
64
62

FIG 08

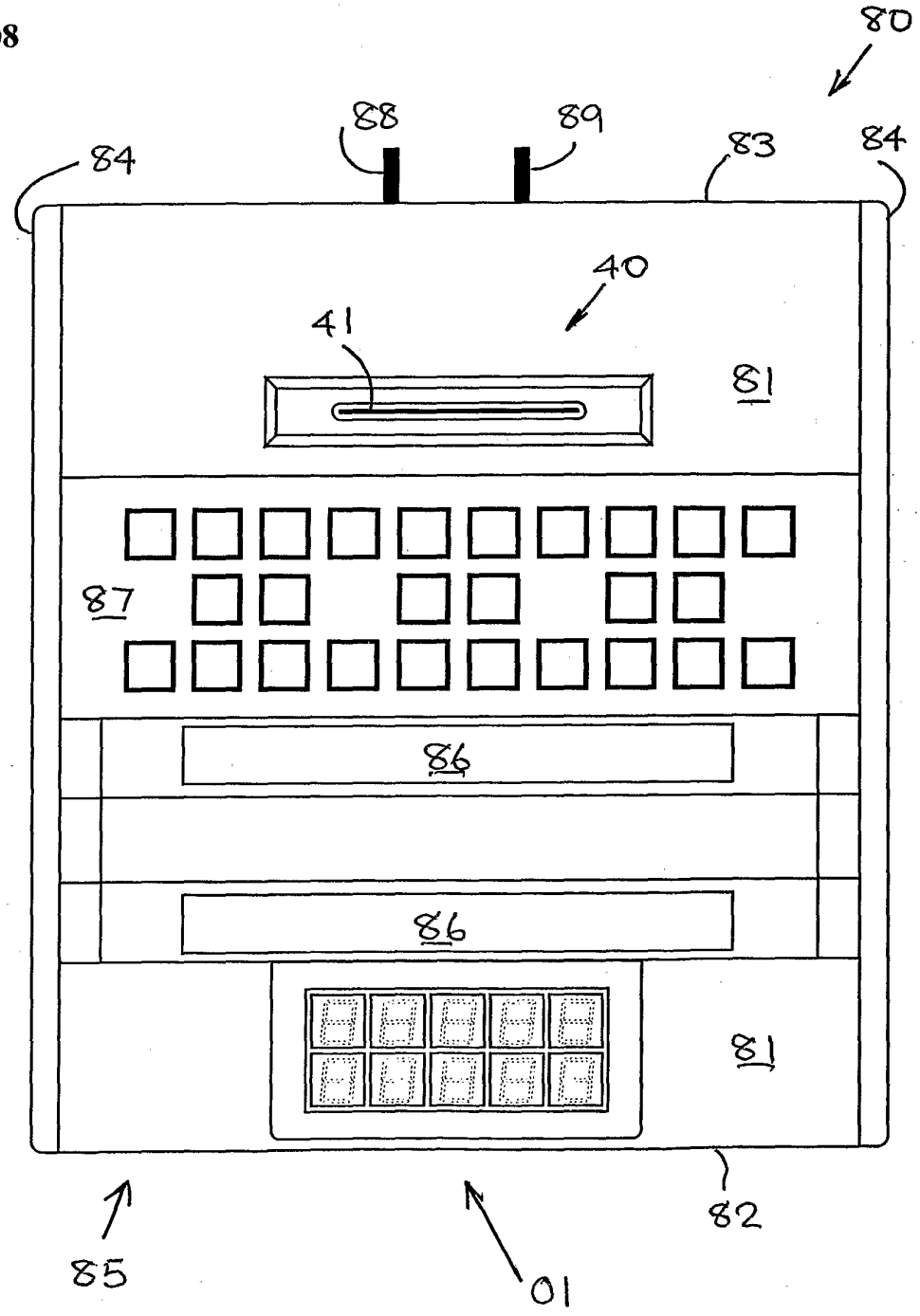

FIG 09

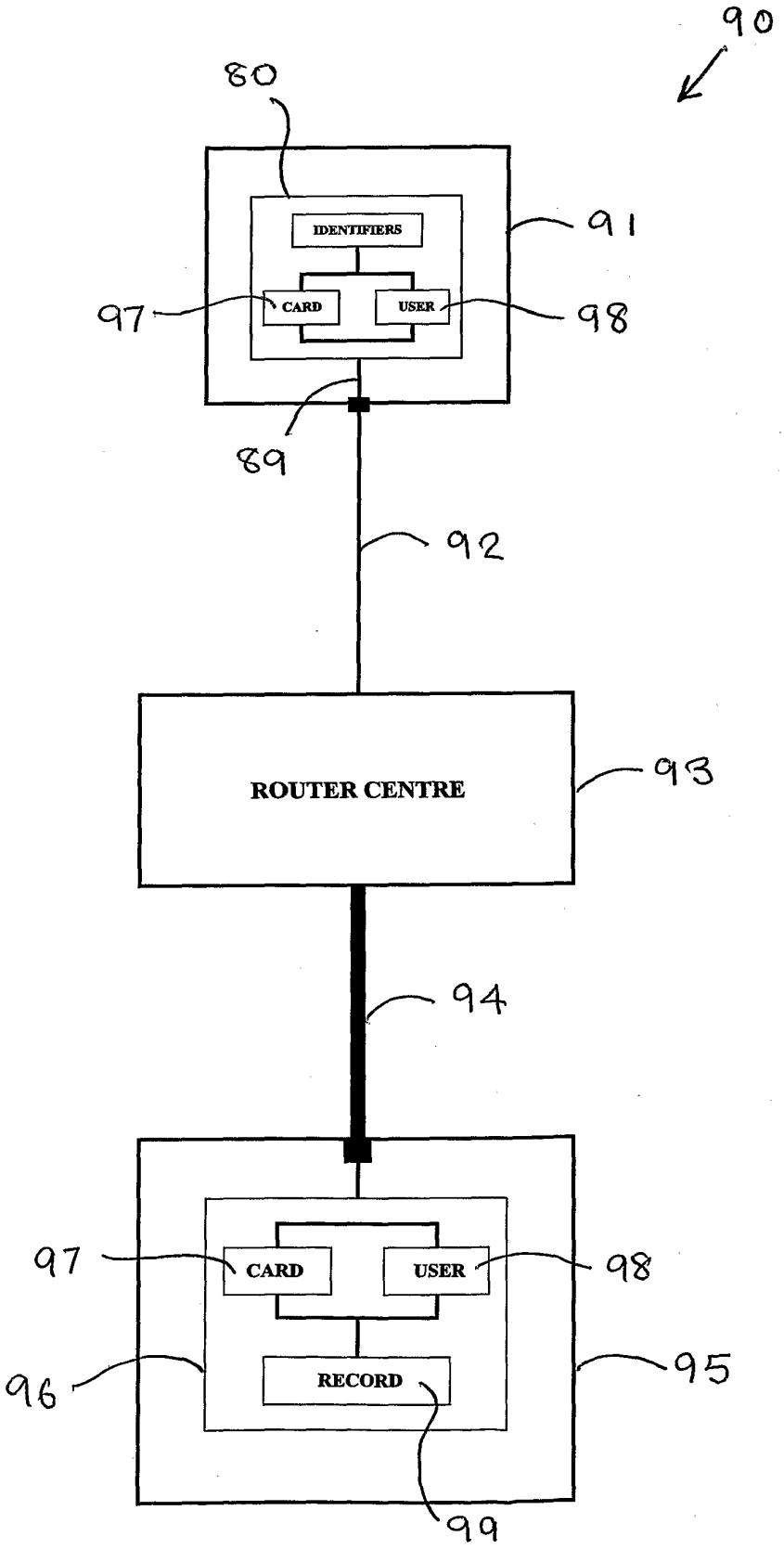
90
80
IDENTIFIERS
91
97
CARD
USER
98
89
92
ROUTER CENTRE
93
94
97
CARD
USER
98
96
RECORD
95
99

FIG 10

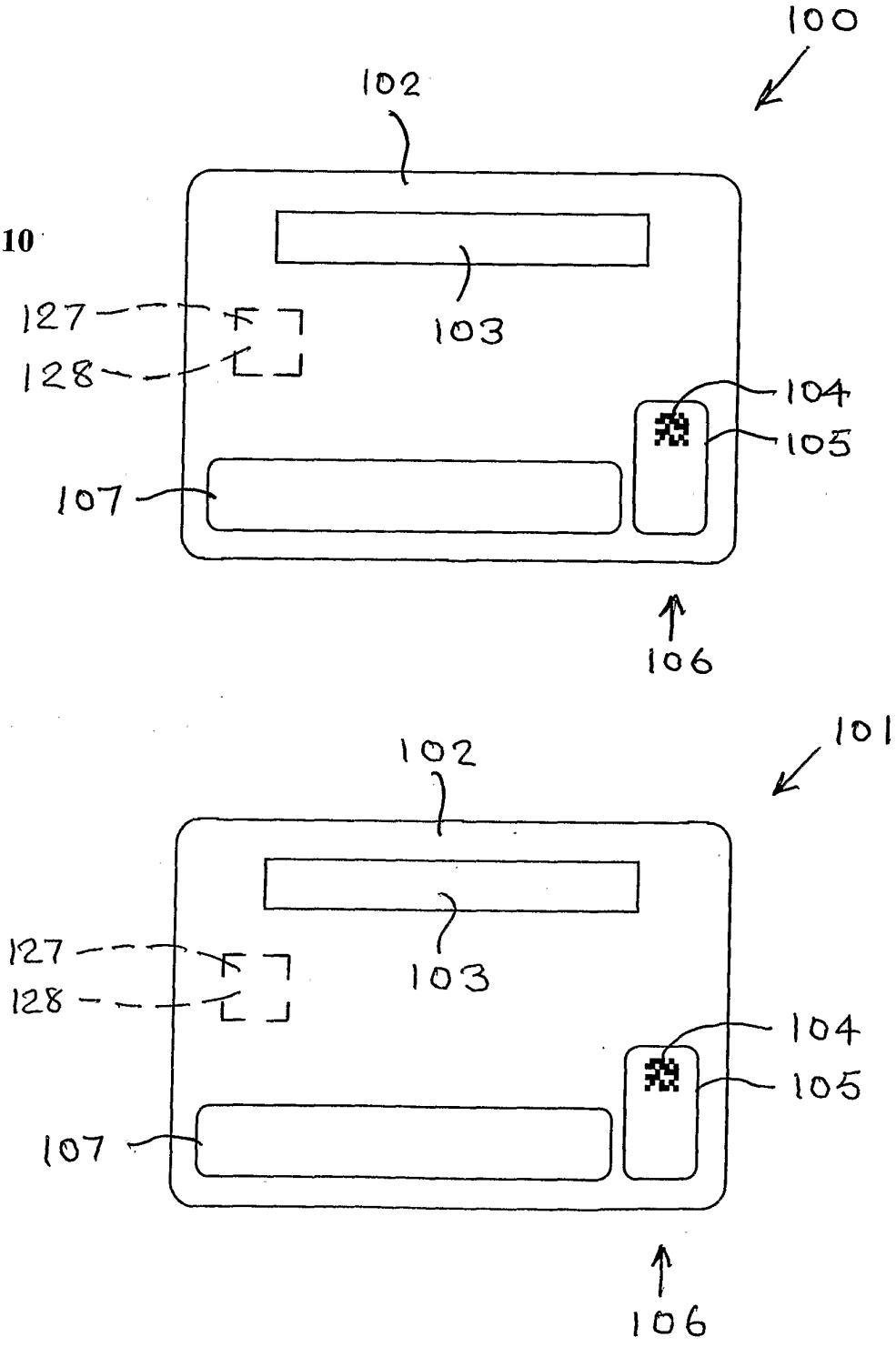
100
102
103
127
128
104
105
107
106
101
102
103
127
128
104
105
107
106

FIG 11

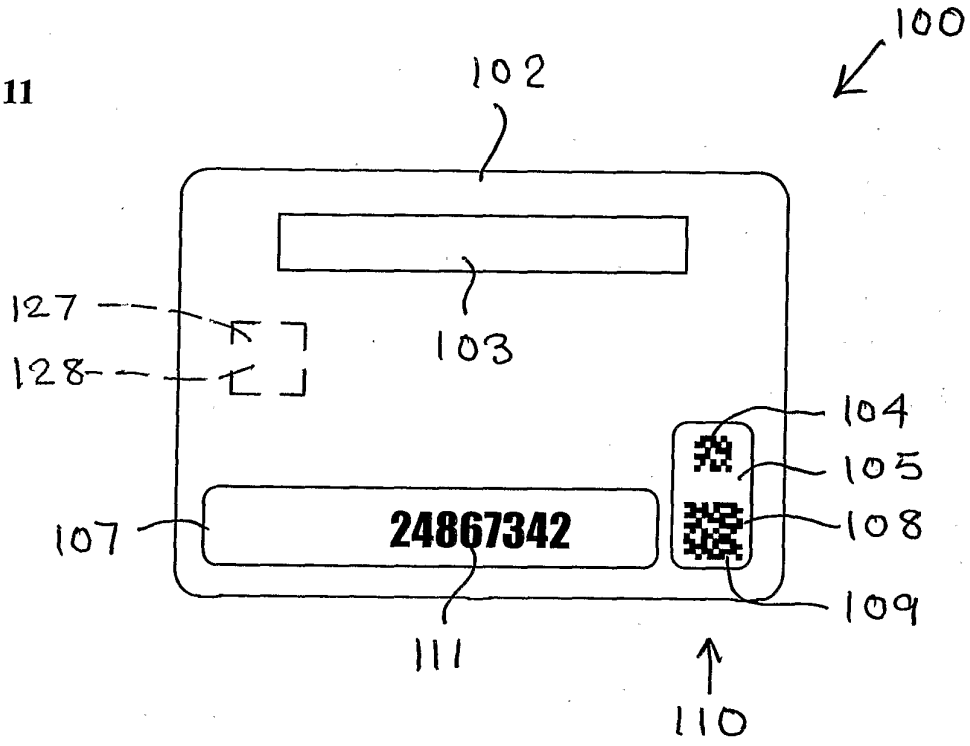
100
102
103
127
128
104
105
107
24867342
108
109
111
110

FIG 12

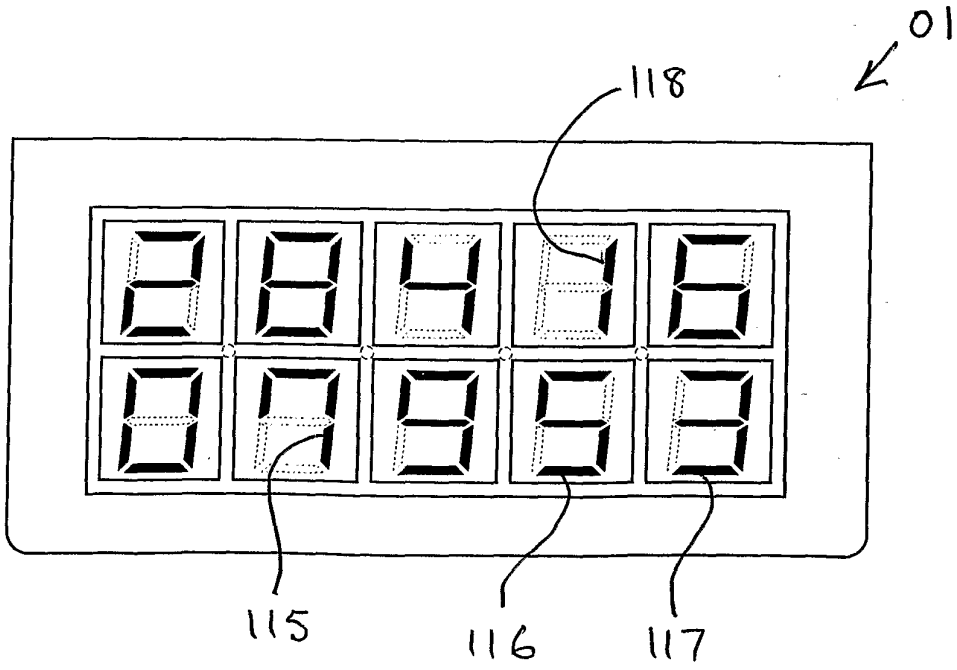
01
118
115
116
117

FIG 13

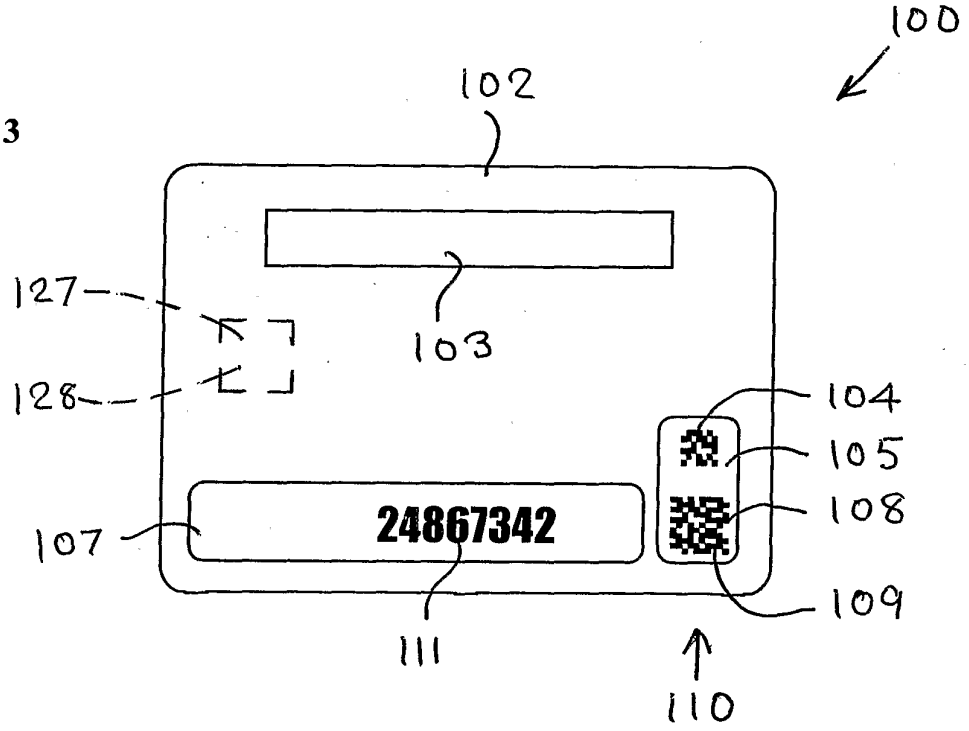
100
102
103
127
128
104
105
108
107
24867342
109
111
110

FIG 14

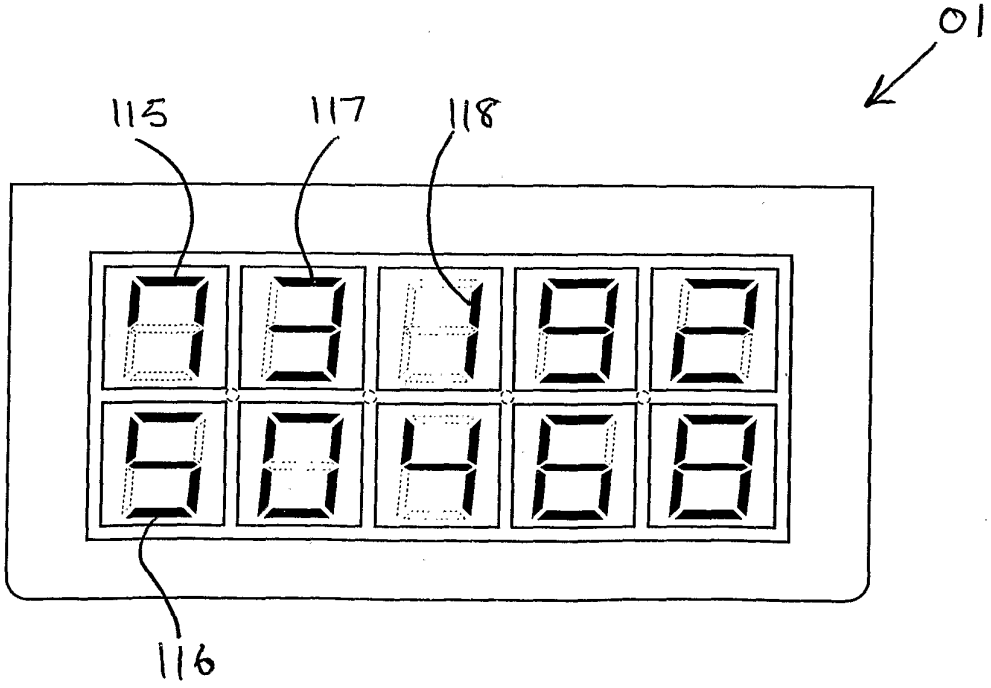
01
115
117
118
116

FIG 15

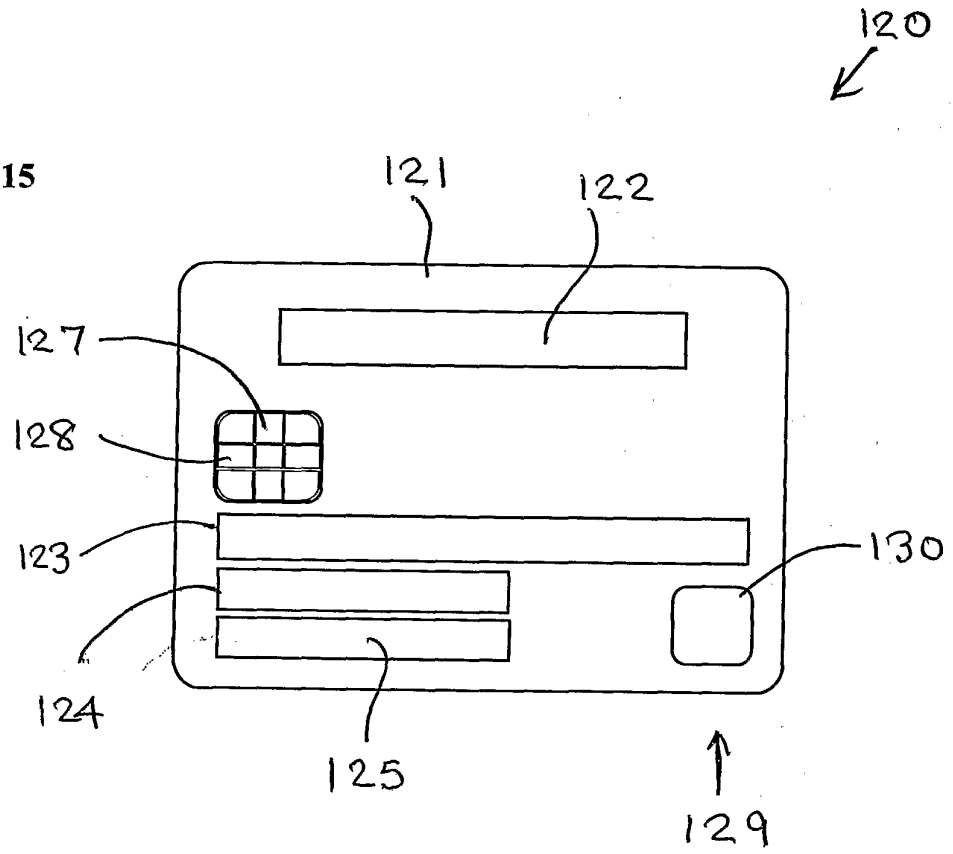

FIG 16

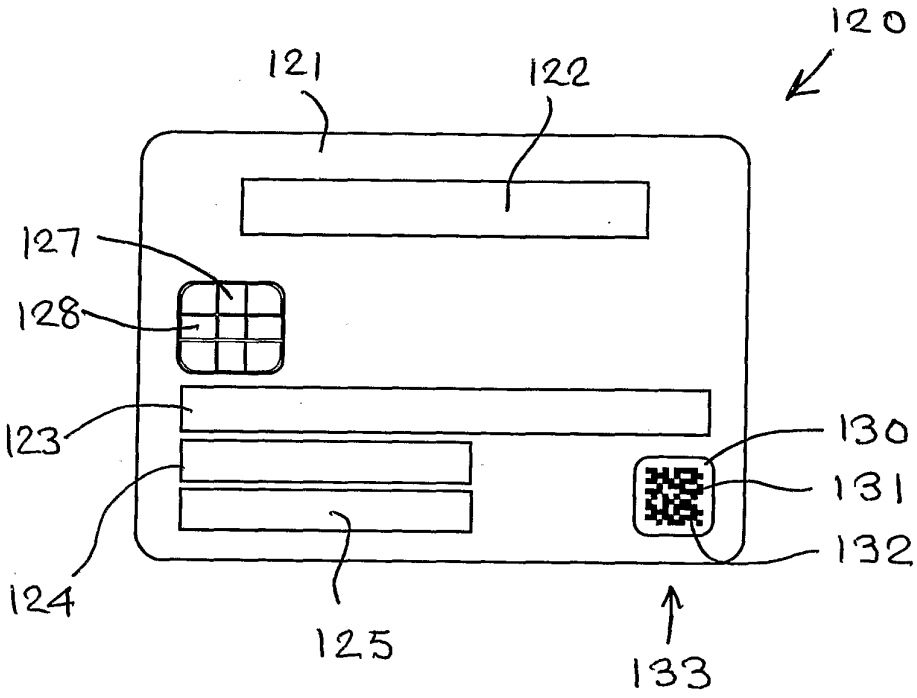
120
121
122
127
128
123
130
131
132
124
125
133

FIG 17

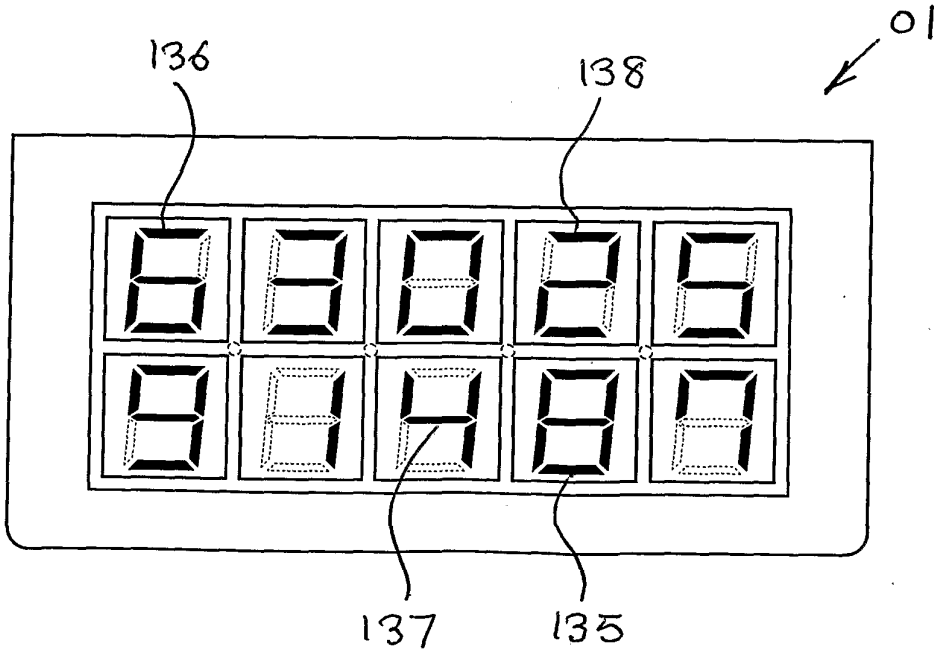
01
136
138
137
135

FIG 18

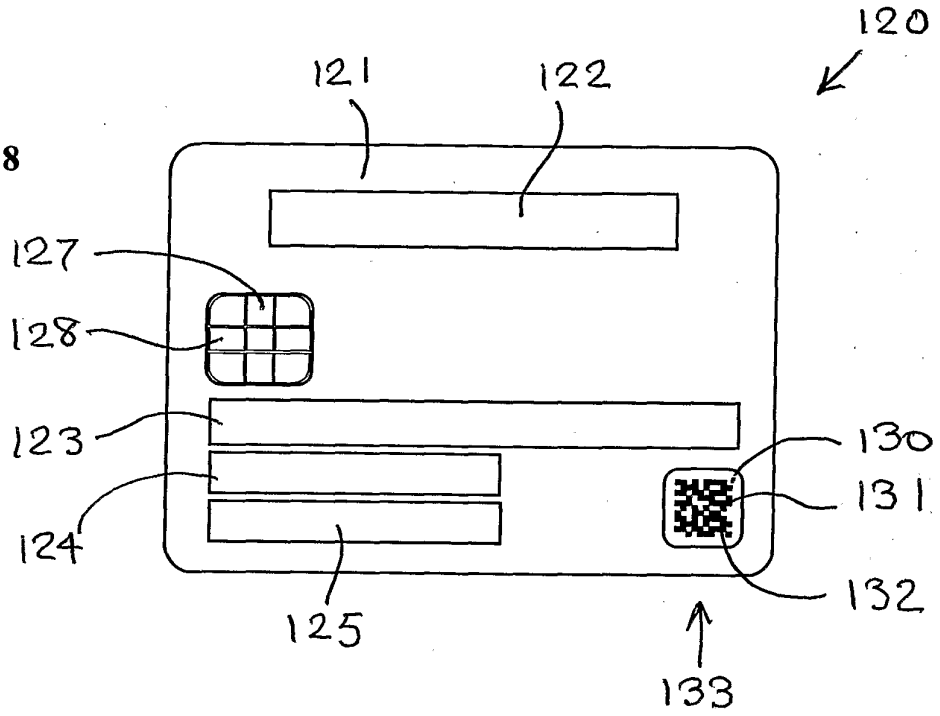
120
121
122
127
128
123
124
125
130
131
132
133

FIG 19

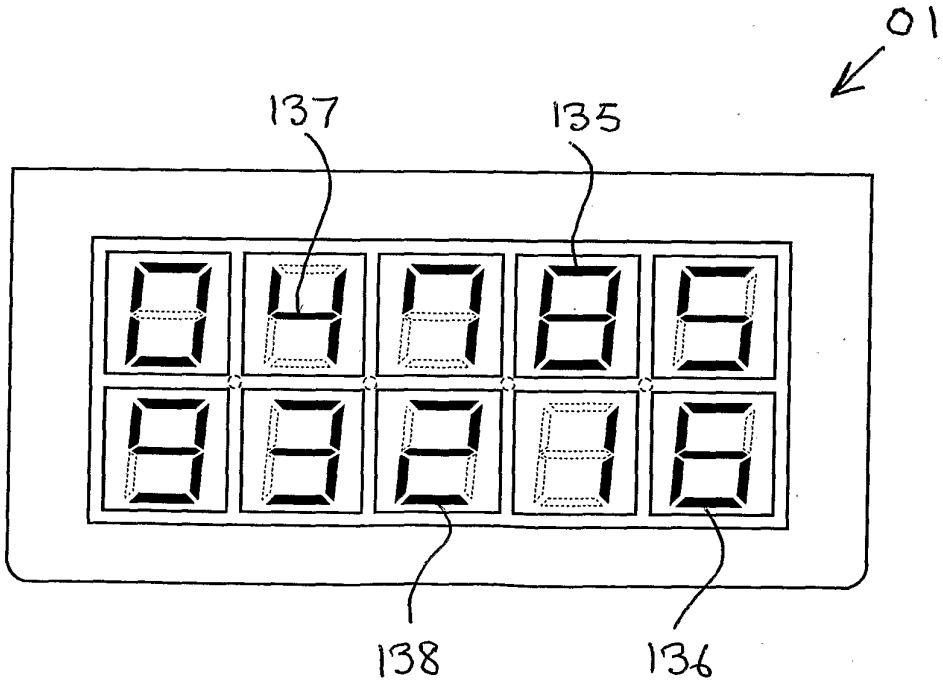
101
137
135
138
136

FIG 20

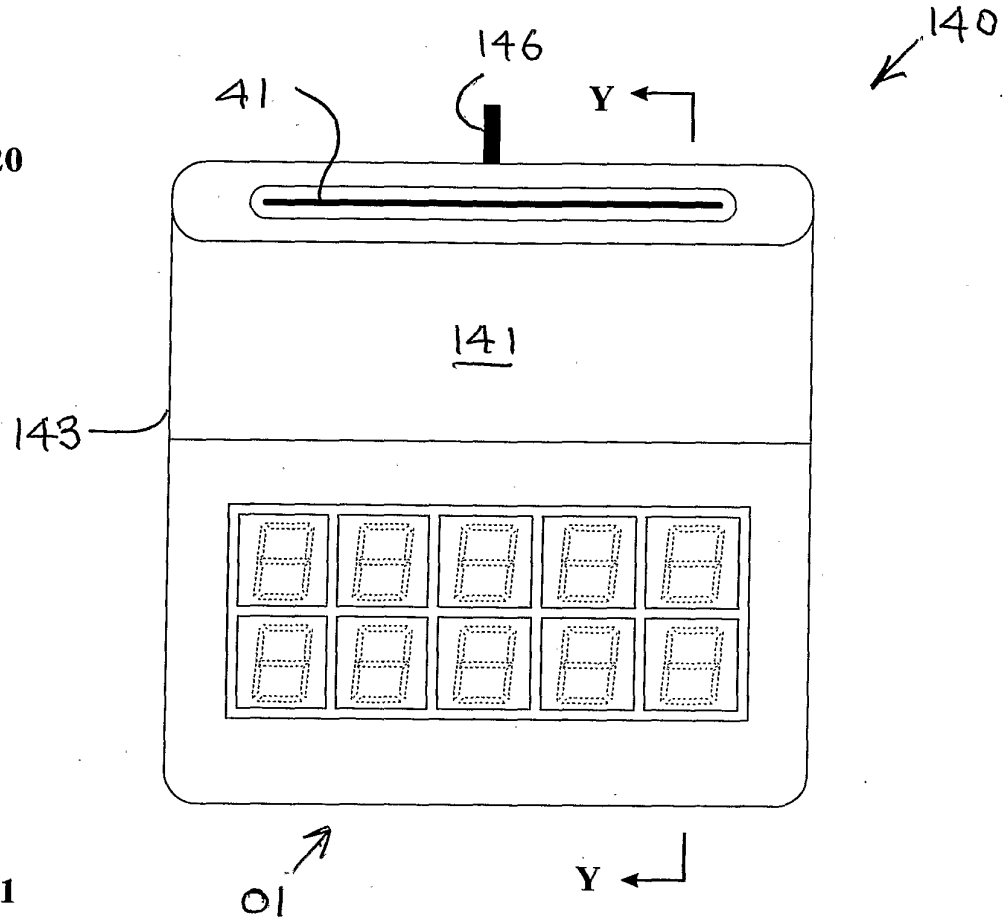

FIG 21

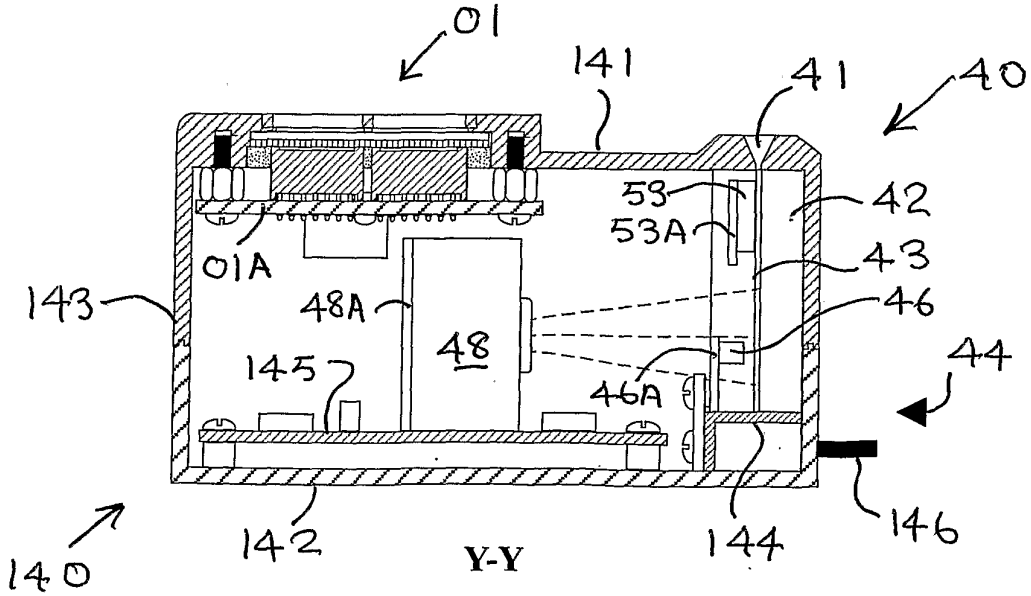

Y-Y

FIG 22

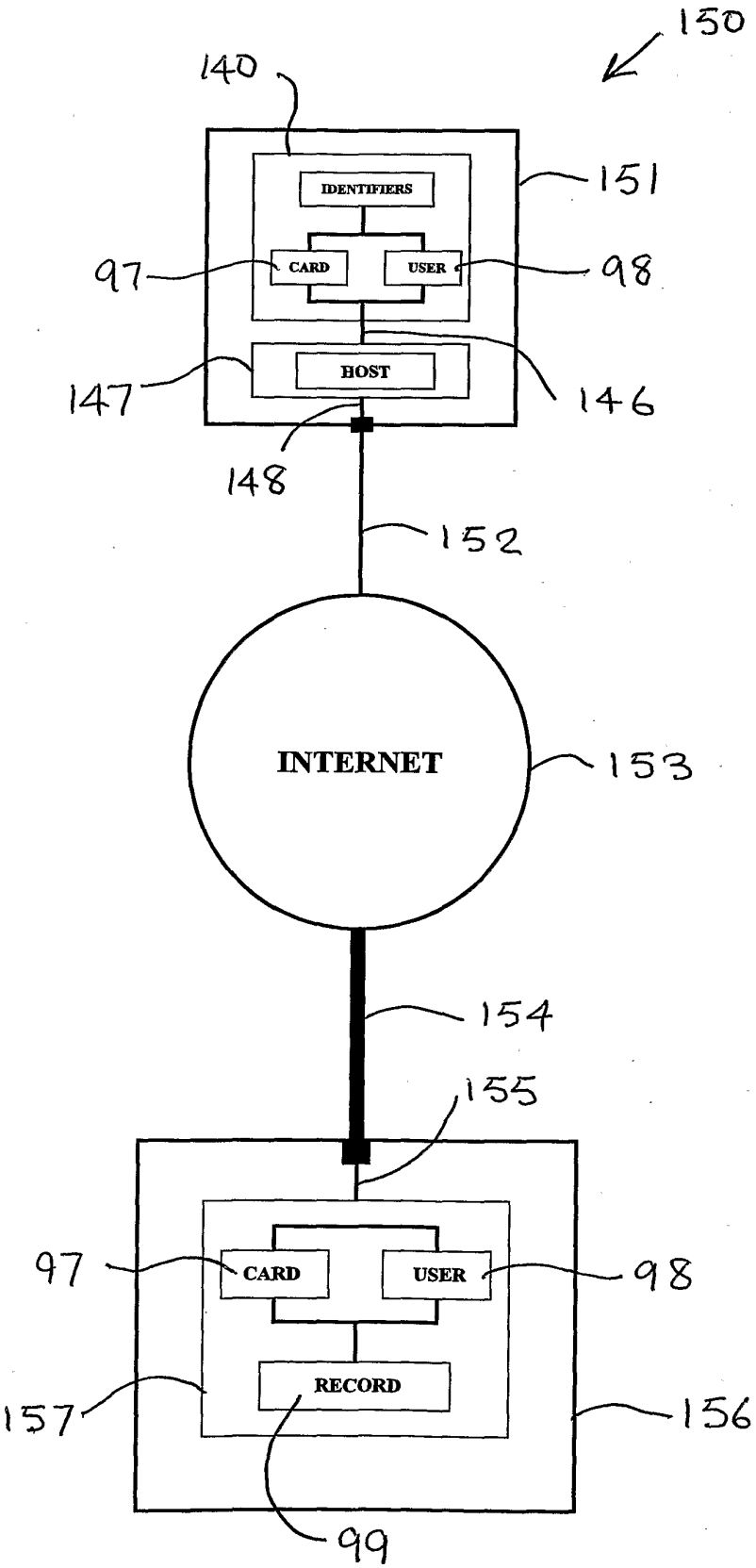
150
140
IDENTIFIERS
151
97
CARD
USER
98
147
HOST
146
148
152
INTERNET
153
154
155
97
CARD
USER
98
RECORD
157
156
99