Nov. 18, 1969 A. E. COMSTOCK 3,478,924

EGG CARTON AND TRAY DISPENSING MACHINE

Filed Nov. 6, 1967 10 Sheets-Sheet 1

Fig. 1

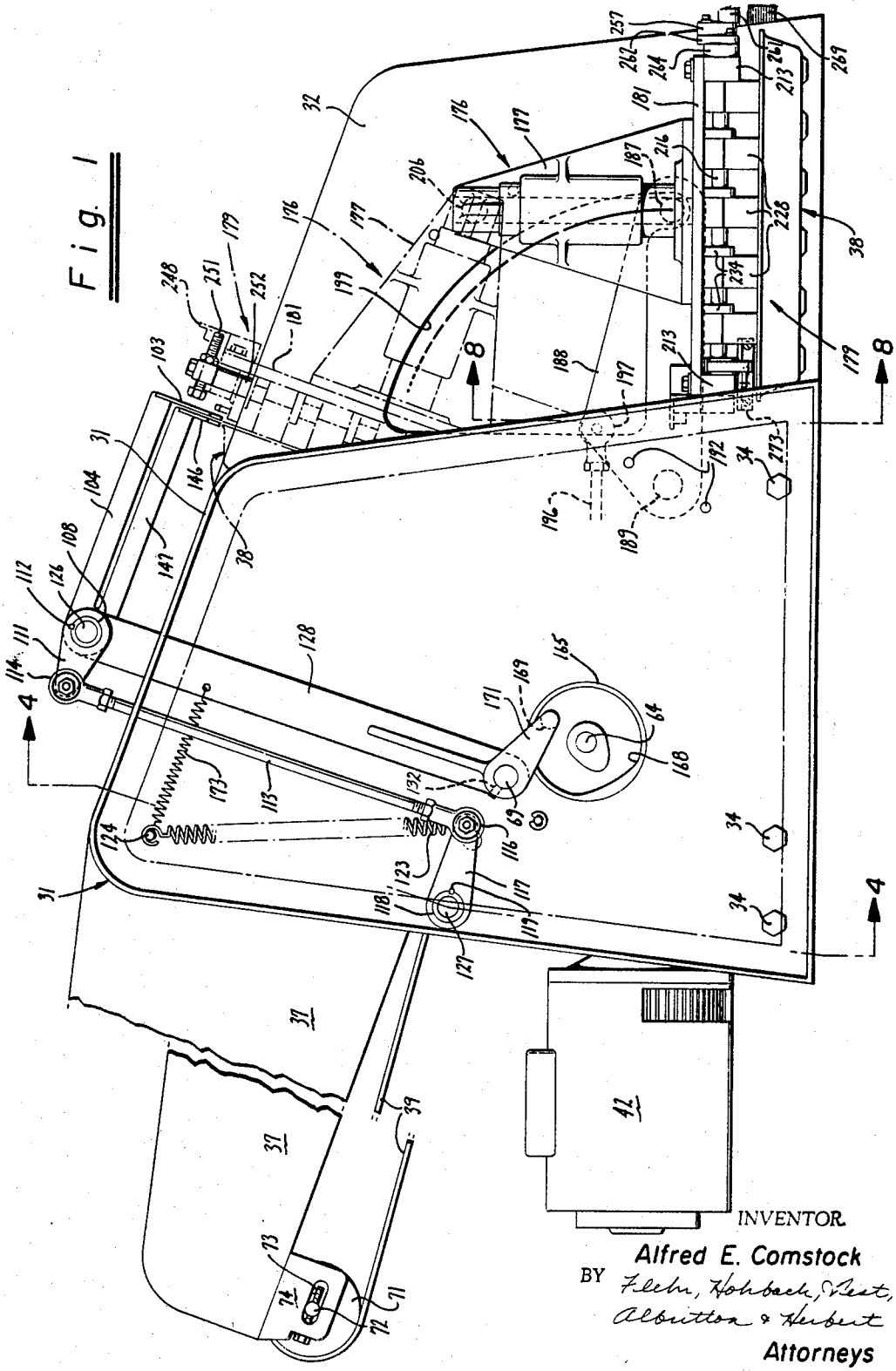

INVENTOR.
Alfred E. Comstock
BY Fleehr, Hohbach, Test, Albritton & Herbert
Attorneys

Nov. 18, 1969 A. E. COMSTOCK 3,478,924

EGG CARTON AND TRAY DISPENSING MACHINE

Filed Nov. 6, 1967 10 Sheets-Sheet 2

Fig. 2

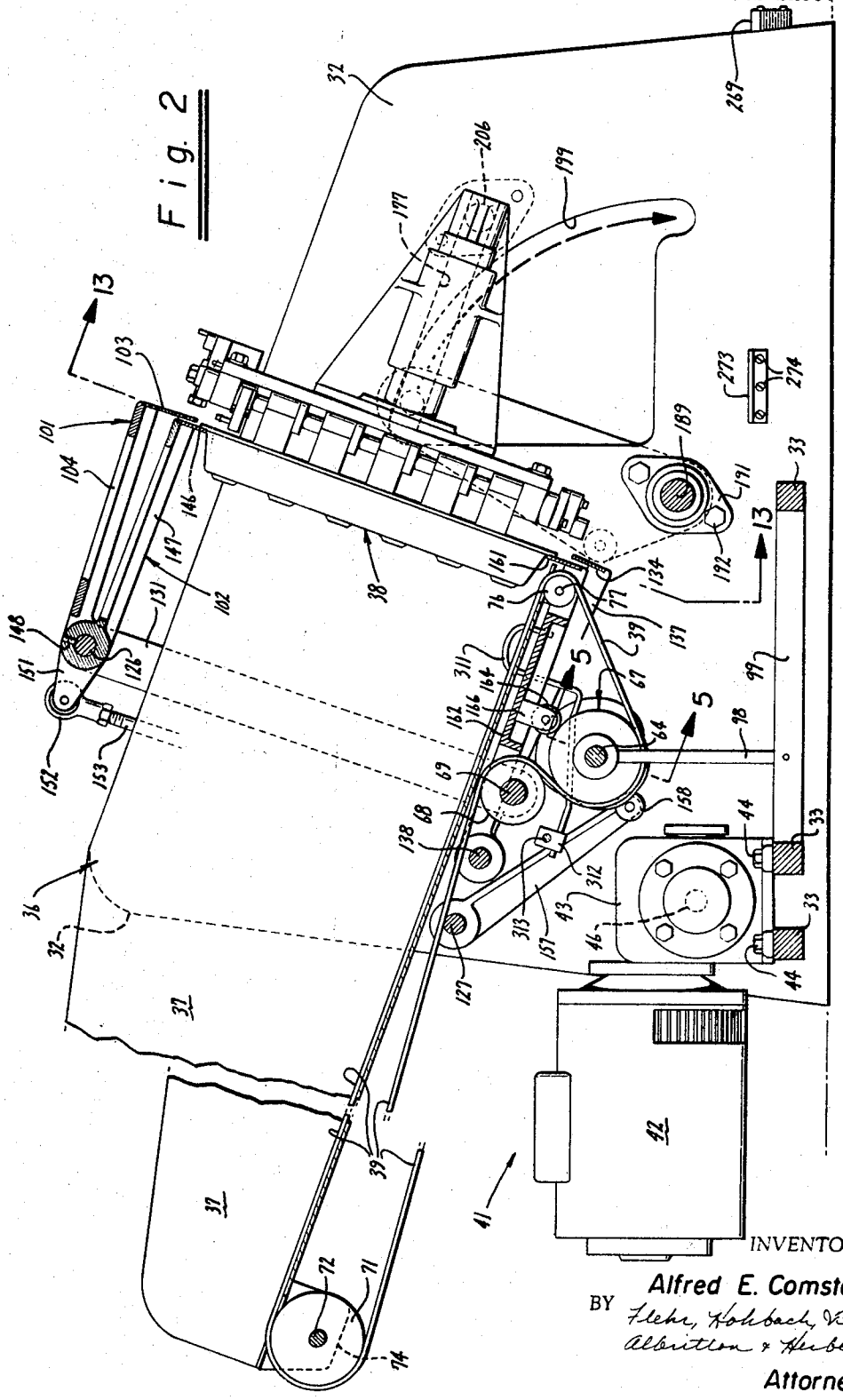

Nov. 18, 1969 A. E. COMSTOCK 3,478,924

EGG CARTON AND TRAY DISPENSING MACHINE

Filed Nov. 6, 1967 10 Sheets-Sheet 3

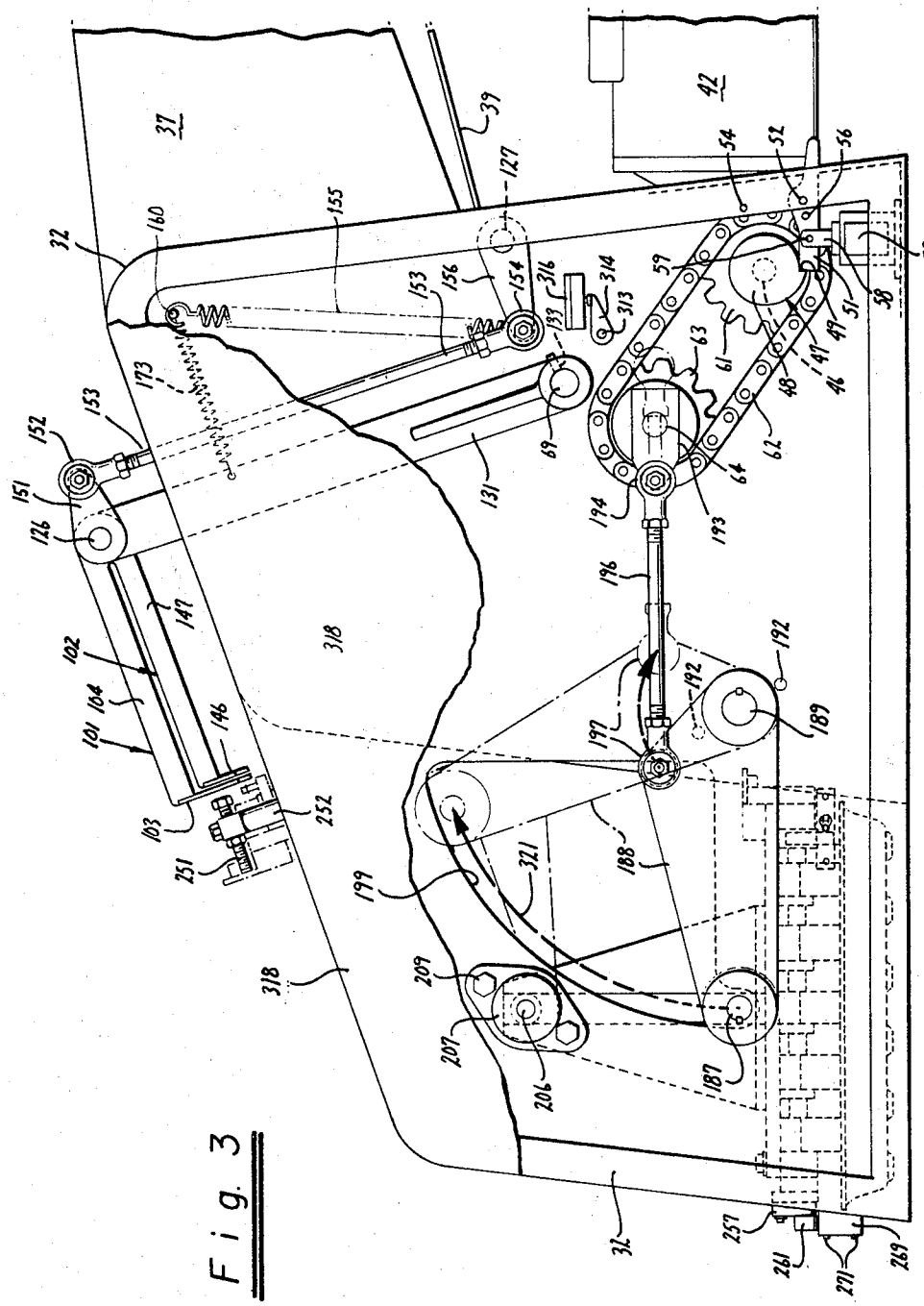

Fig. 3

INVENTOR.

Alfred E. Comstock

BY Flehr, Hohbach, Test, Albritton & Herbert

Attorneys

Nov. 18, 1969 A. E. COMSTOCK 3,478,924

EGG CARTON AND TRAY DISPENSING MACHINE

Filed Nov. 6, 1967 10 Sheets-Sheet 4

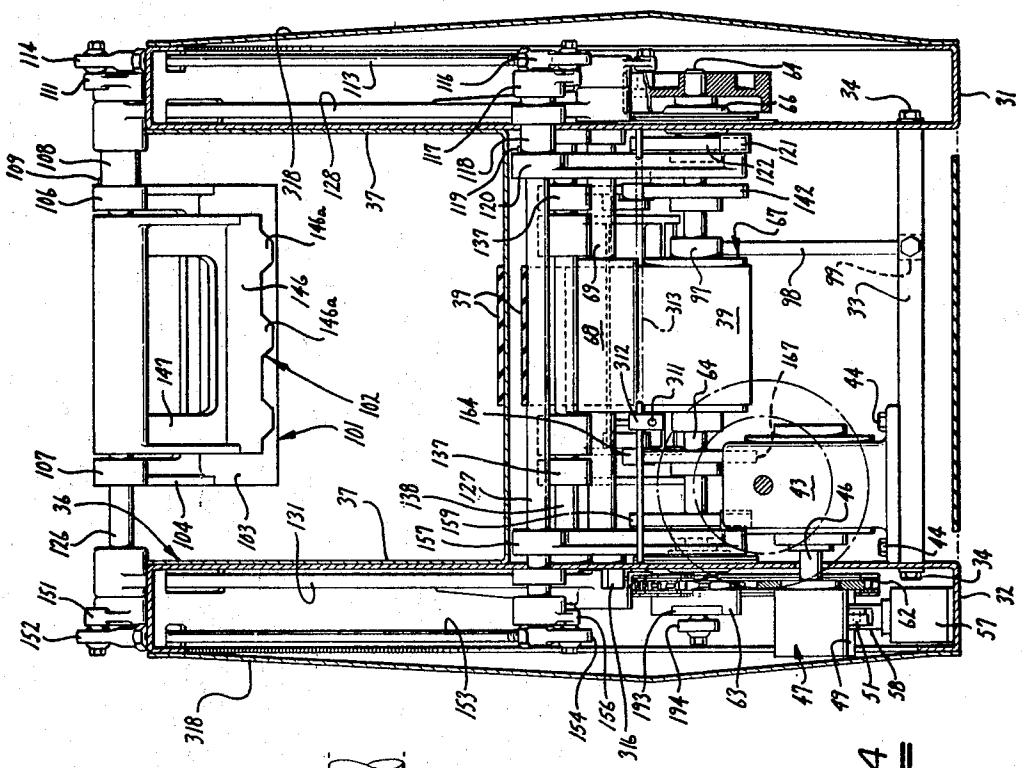

Fig. 4

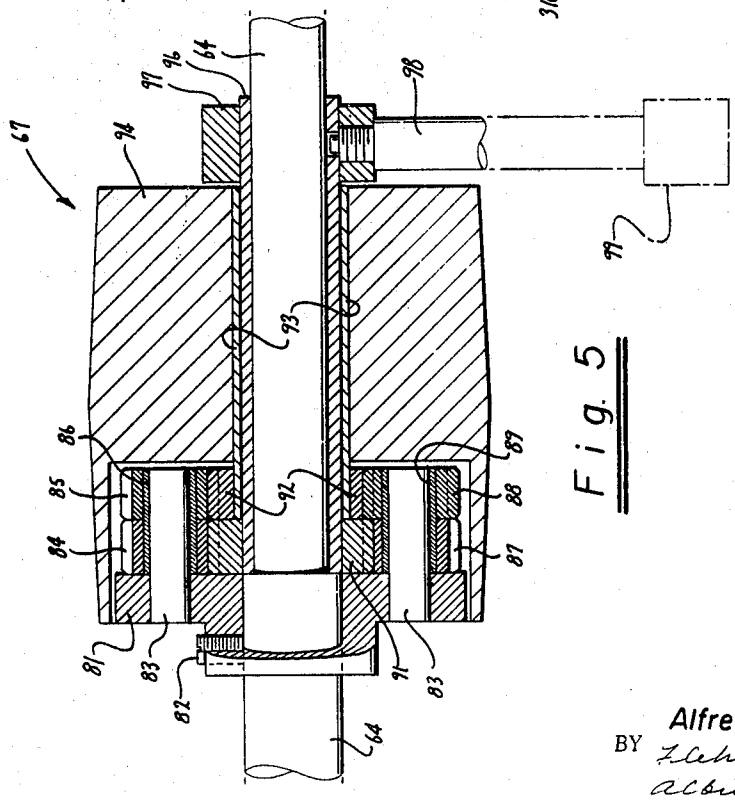

Fig. 5

INVENTOR.
Alfred E. Comstock
BY Flehr, Hohbach, Test, Albritton & Herbert
Attorneys

Nov. 18, 1969 A. E. COMSTOCK 3,478,924

EGG CARTON AND TRAY DISPENSING MACHINE

Filed Nov. 6, 1967 10 Sheets-Sheet 5

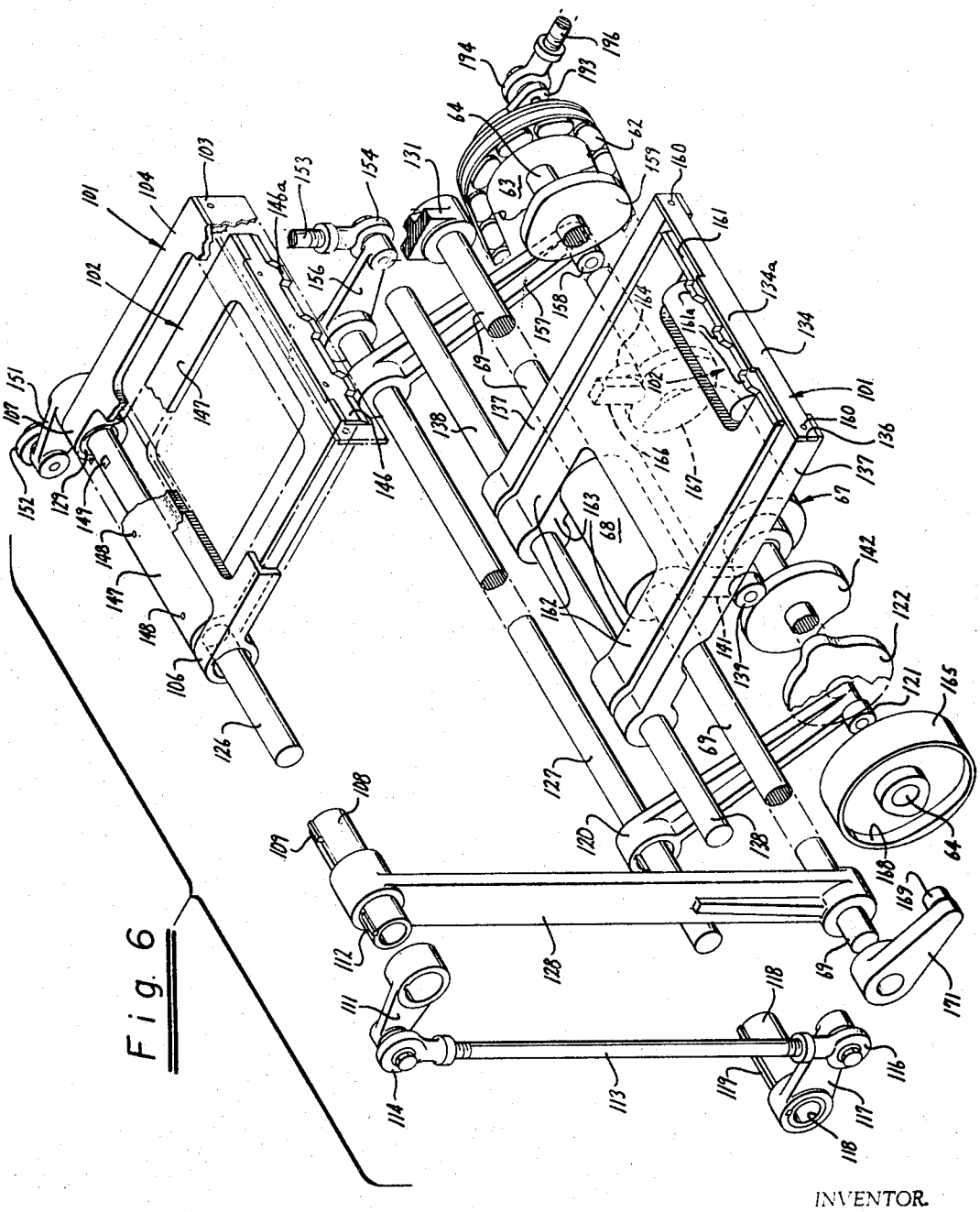

Fig. 6

INVENTOR.

Alfred E. Comstock

BY Flehr, Hohbach, Test, Albritton & Herbert

Attorneys

Nov. 18, 1969 A. E. COMSTOCK 3,478,924

EGG CARTON AND TRAY DISPENSING MACHINE

Filed Nov. 6, 1967 10 Sheets-Sheet 6

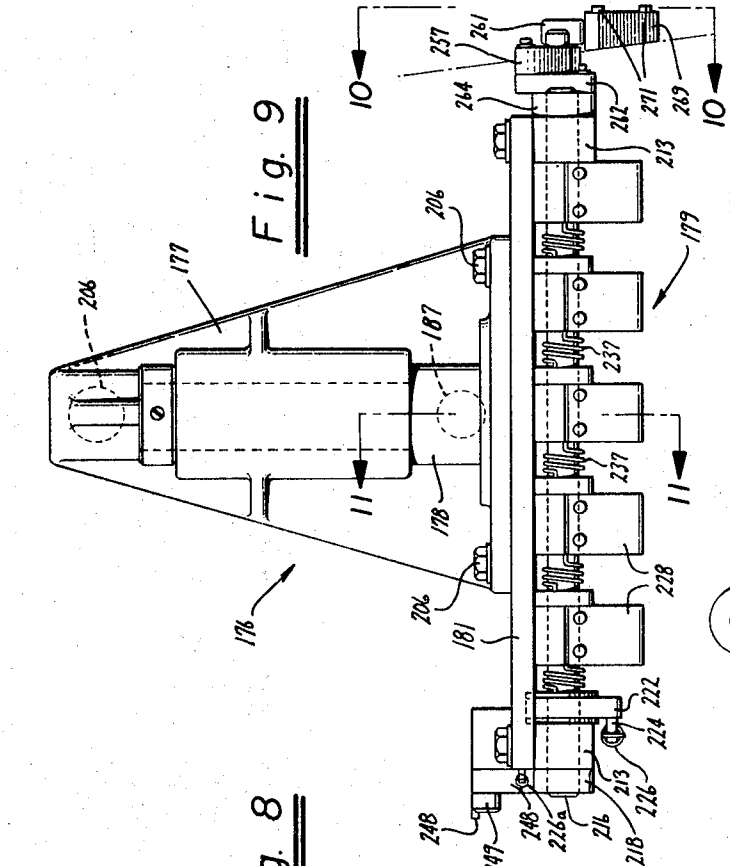

Fig. 9

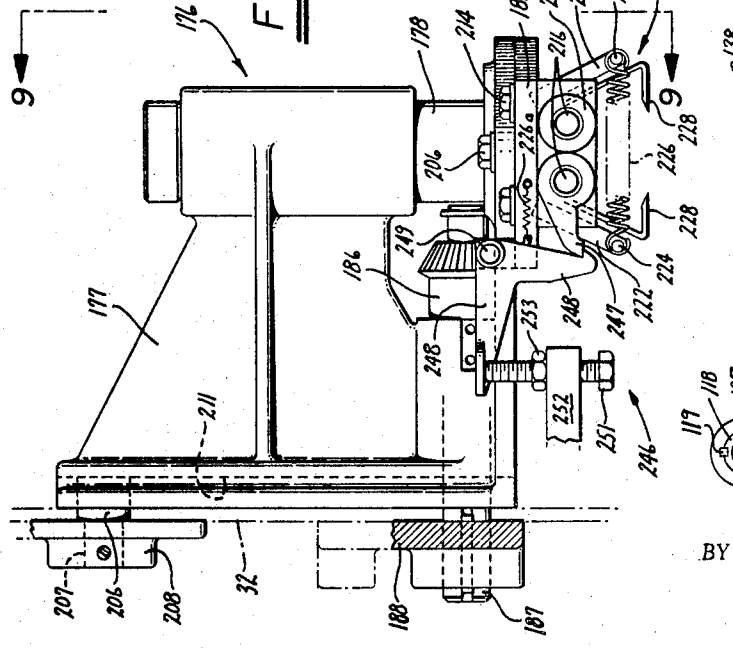

Fig. 8

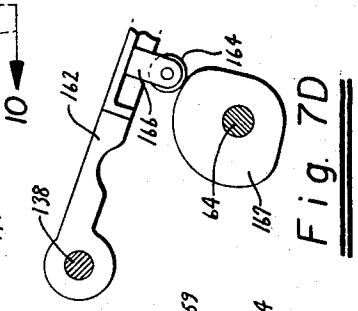

Fig. 7D

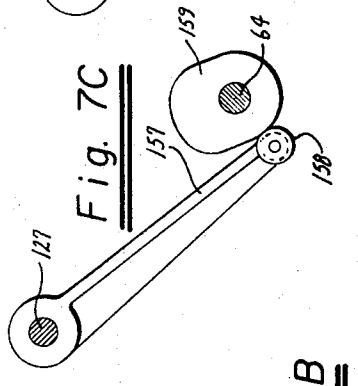

Fig. 7C

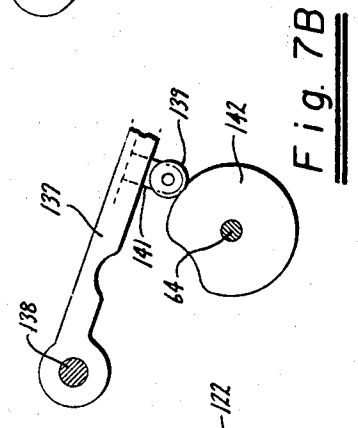

Fig. 7B

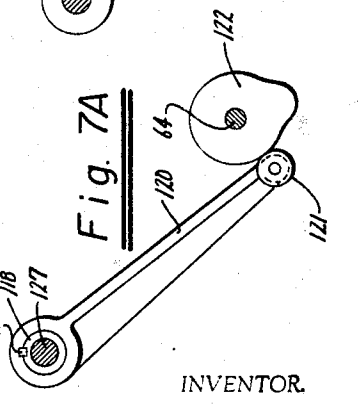

Fig. 7A

INVENTOR.

Alfred E. Comstock

BY Fleit, Hohbach, Test, Albritton & Herbert

Attorneys

Nov. 18, 1969 A. E. COMSTOCK 3,478,924

EGG CARTON AND TRAY DISPENSING MACHINE

Filed Nov. 6, 1967 10 Sheets-Sheet 7

Fig. 12

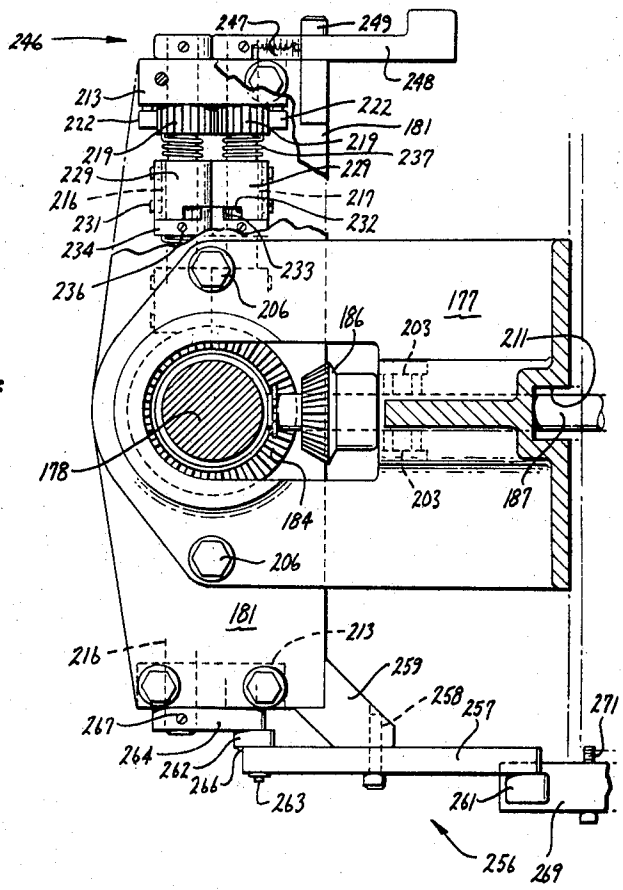

Fig. 11

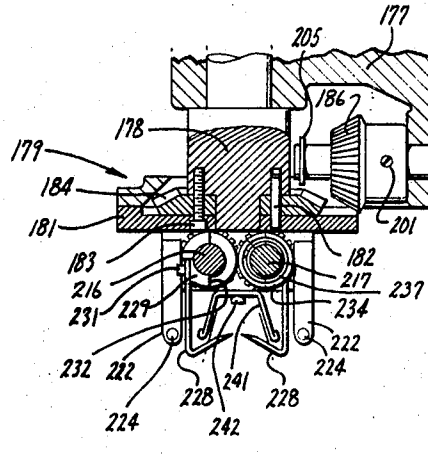

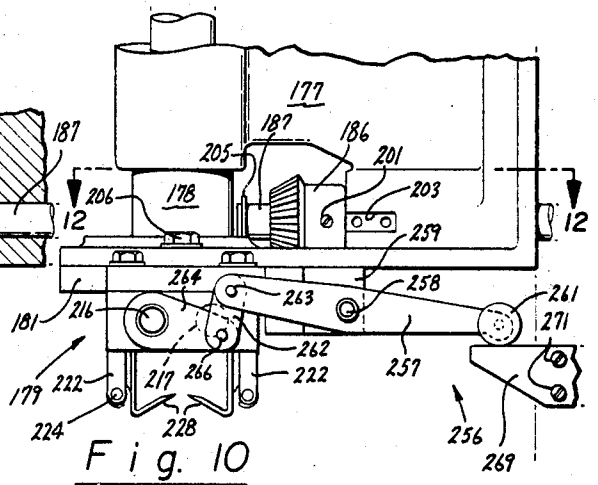

Fig. 10

INVENTOR.

Alfred E. Comstock

BY Fleht, Hohbach, Test, Albritton & Herbert

Attorneys

Nov. 18, 1969 A. E. COMSTOCK 3,478,924

EGG CARTON AND TRAY DISPENSING MACHINE

Filed Nov. 6, 1967 10 Sheets-Sheet 8

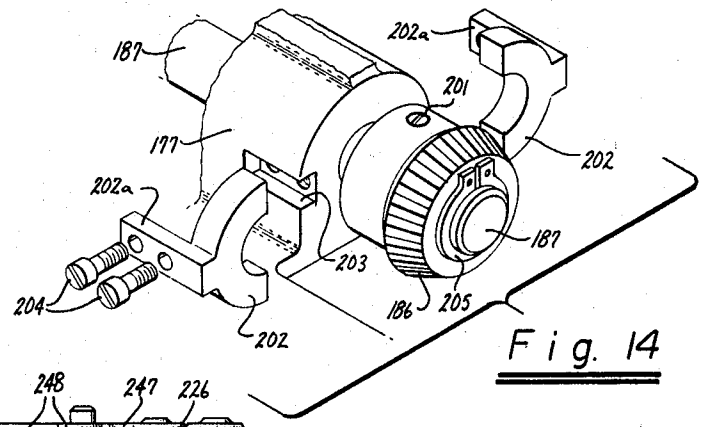

Fig. 14

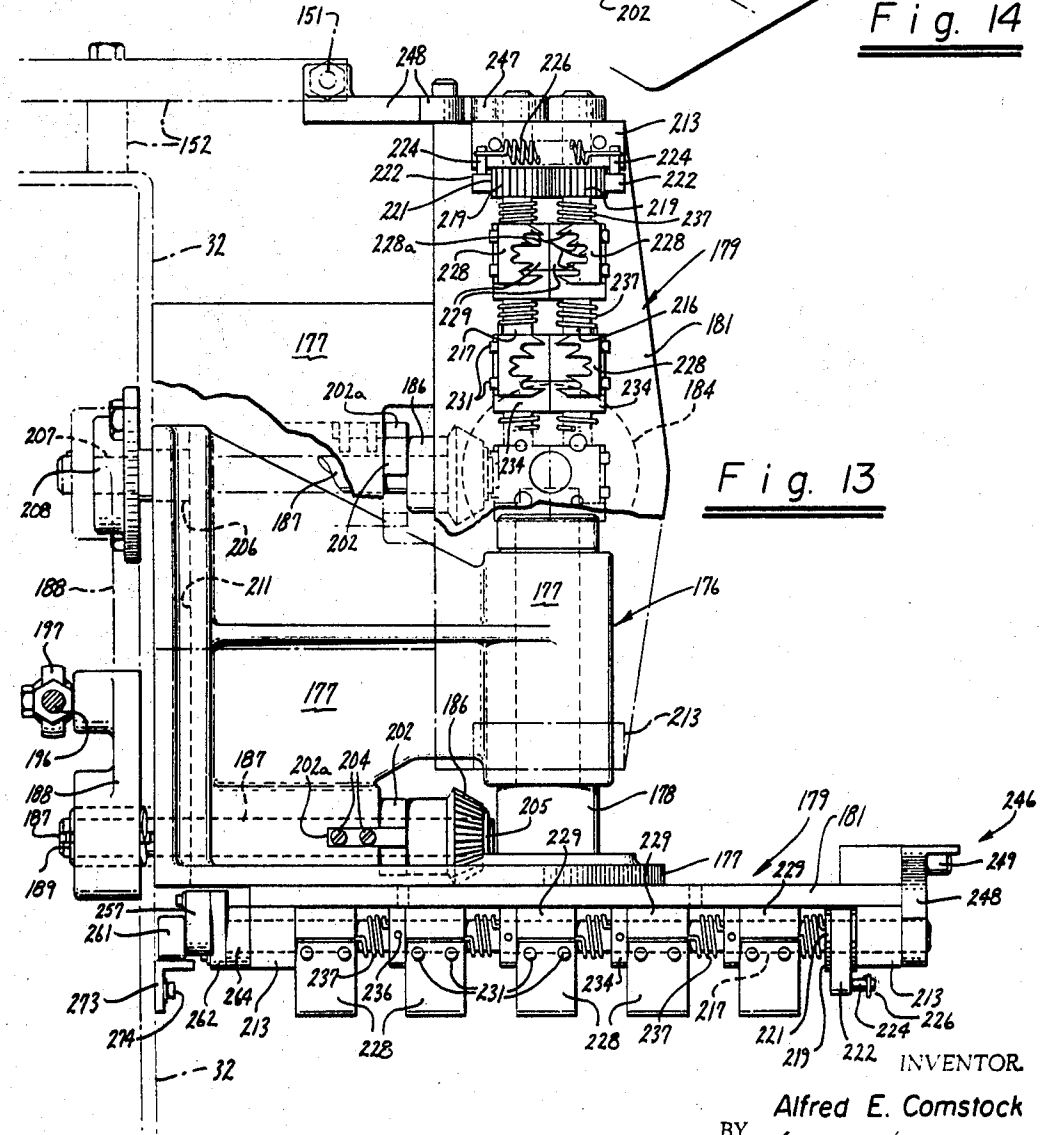

Fig. 13

INVENTOR.
Alfred E. Comstock
BY Fleit, Hohbach, Test, Albritton & Herbert
Attorneys

Nov. 18, 1969 A. E. COMSTOCK 3,478,924

EGG CARTON AND TRAY DISPENSING MACHINE

Filed Nov. 6, 1967 10 Sheets-Sheet 9

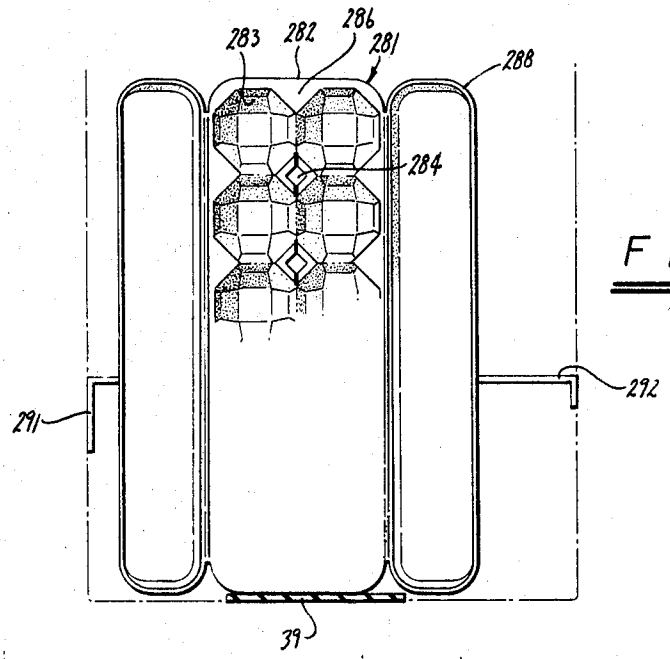

Fig. 16

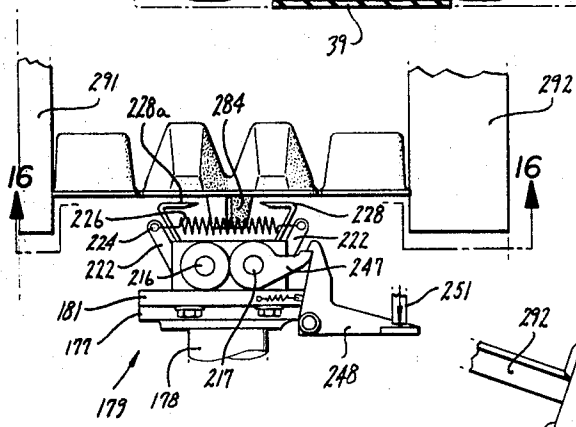

Fig. 15

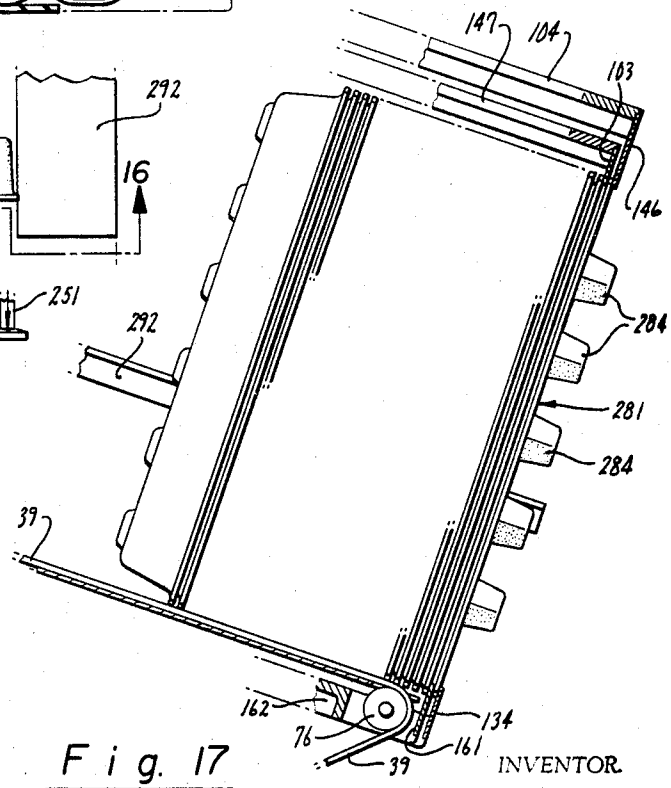

Fig. 17

INVENTOR.
Alfred E. Comstock
BY Fleehr, Hohbach, Test, Albritton & Herbert
Attorneys

Nov. 18, 1969 A. E. COMSTOCK 3,478,924

EGG CARTON AND TRAY DISPENSING MACHINE

Filed Nov. 6, 1967 10 Sheets-Sheet 10

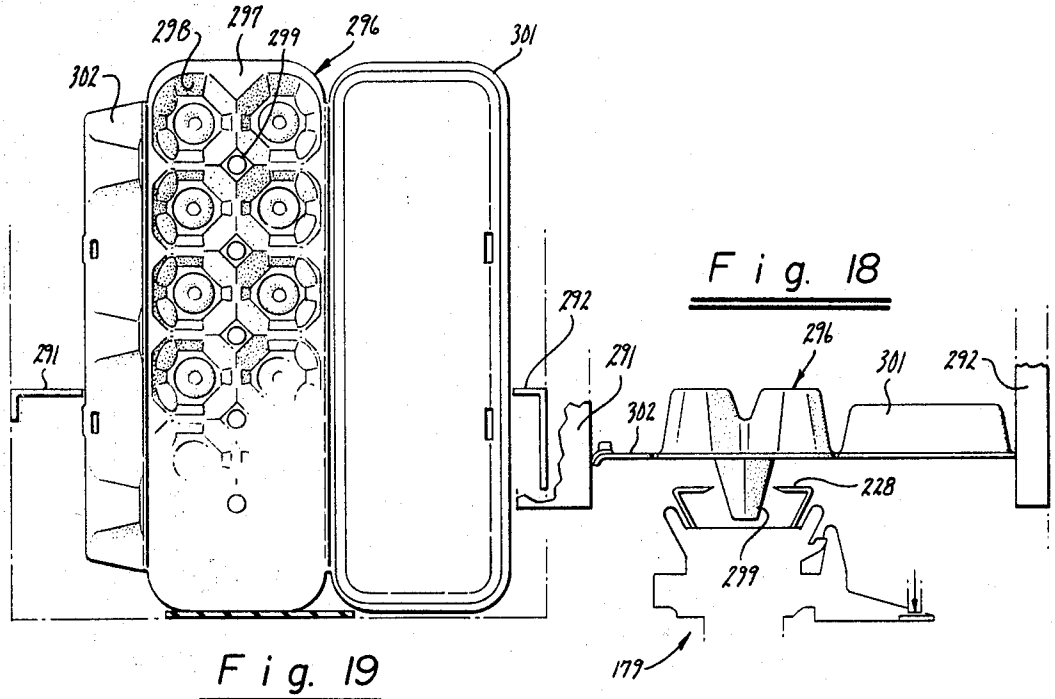

Fig. 18

Fig. 19

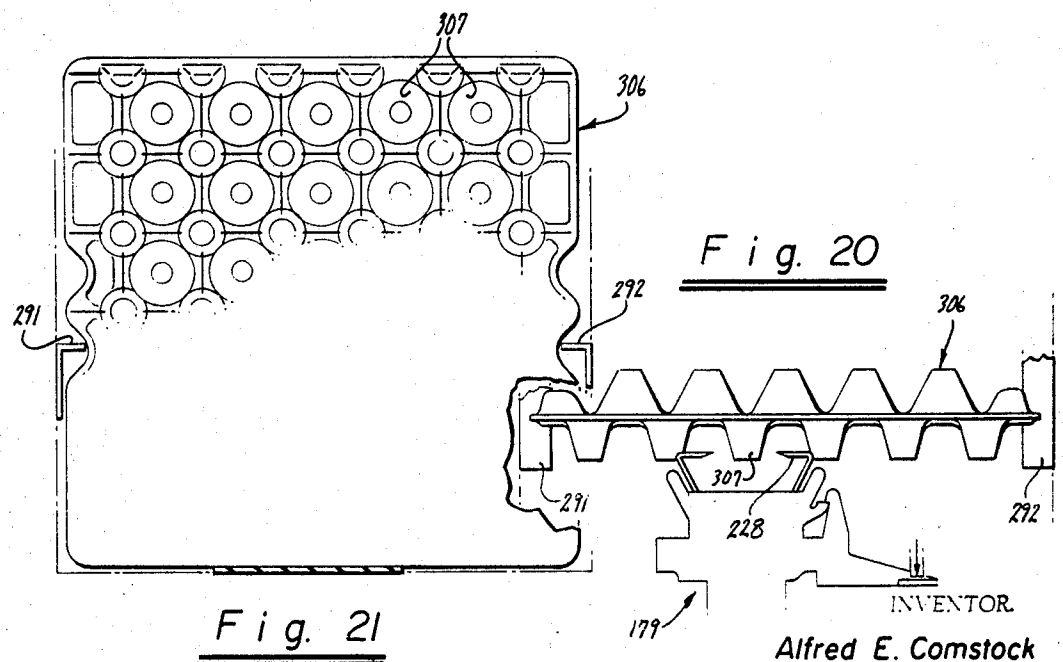

Fig. 20

Fig. 21

INVENTOR.
Alfred E. Comstock
BY Fleit, Kobach, Kent, Albritton & Herbert
Attorneys

United States Patent Office 3,478,924
Patented Nov. 18, 1969

3,478,924

EGG CARTON AND TRAY DISPENSING MACHINE

Alfred E. Comstock, Frontenac, Minn. 55026

Filed Nov. 6, 1967, Ser. No. 680,817
Int. Cl. B65h 3/26
U.S. Cl. 221—213 14 Claims

ABSTRACT OF THE DISCLOSURE

Egg carton and dispensing machine having means which denests the trays or cartons, one by one, from a stack of such trays or cartons in the dispensing machine and which delivers them in a straight line or rotates them through 90 degrees.

BACKGROUND OF THE INVENTION

This invention relates to carton or tray denesters and particularly to the type which are adapted for feeding cartons or trays into egg grading machines.

Although denesters have previously been available for feeding egg cartons or trays to egg grading machines, all of such denesters have had serious limitations. For example, certain of the denesters could only work with certain types of trays and cartons. Others could not be readily modified at the customer's plant to deliver the cartons in a straight line or to rotate them through 90 degrees after they had been denested.

SUMMARY OF THE INVENTION

The invention relates to a dispensing machine for cartons or trays of the type having posts inside the outer perimeter of the carton or tray. A magazine is provided for receiving a plurality of nested cartons or trays. The machine includes a pickup head and means for moving the pickup head between a pickup position which can pick up cartons or trays from the magazine and a discharge position away from the magazine at which it can discharge the cartons or trays. The pickup head has post-grasping means for grasping the posts of the cartons or trays and means operable with the means for moving the pickup head for moving the post-grasping means between the post-grasping position in which the posts are grasped when the pickup head is moved to the pickup position and a post-releasing position when the pickup head is moved to the discharge position.

In general, it is an object of the present invention to provide a dispensing machine in which the posts of the cartons or trays are grasped to permit denesting of the cartons or trays without damaging the edges of the cartons or trays.

Another object of the invention is to provide a dispensing machine in which independent gripping action is provided for each of the posts to provide a uniform distribution of the gripping forces on all of the posts to prevent damage to any one of the posts of the carton or tray.

Another object of the invention is to provide a dispensing machine of the above character in which the cartons or trays can be delivered in a position which is in line with the position in which the cartons or trays are in the magazine or in a position in which they are rotated through at least 90 degrees.

Another object of the invention is to provide a dispensing machine of the above character which can be utilized with different types of cartons or trays with very minor modifications.

Another object of the invention is to provide a dispensing machine of the above character which is relatively low in cost.

BRIEF DESCRIPTION OF THE DRAWINGS

FIGURE 1 is a side elevational view of an egg carton and tray dispensing machine incorporating the present invention.

FIGURE 2 is a side elevational view in cross-section of the machine shown in FIGURE 1.

FIGURE 3 is a side elevational view of the machine shown in FIGURE 1 on the side opposite that shown in FIGURE 1.

FIGURE 4 is a cross-sectional view taken along the line 4—4 of FIGURE 1.

FIGURE 5 is a cross-sectional view taken along the line 5—5 of FIGURE 2.

FIGURE 6 is an exploded view with carton parts broken away of the cam assemblies utilized in the machine.

FIGURES 7A, 7B, 7C and 7D are side elevational views in cross-section of the top stop, bottom stop, top separator and bottom separator cam assemblies, respectively.

FIGURE 8 is a cross-sectional view taken along the line 8—8 of FIGURE 1.

FIGURE 9 is a view taken along the line 9—9 of FIGURE 8.

FIGURE 10 is a view looking along the line 10—10 of FIGURE 9.

FIGURE 11 is a cross-sectional view taken along the line 11—11 of FIGURE 9.

FIGURE 12 is a cross-sectional view taken along the line 12—12 of FIGURE 10.

FIGURE 13 is a cross-sectional view taken along the line 13—13 of FIGURE 2.

FIGURE 14 is an exploded view of a portion of the drive mechanism shown in FIGURE 13.

FIGURE 15 is a view showing the manner in which a center-fold carton is grasped during the denesting operation.

FIGURE 16 is a view looking along the line 16—16 of FIGURE 15 showing the construction of the center-fold carton.

FIGURE 17 is a view showing the manner in which the stack of center-fold cartons is carried in the machine ready to be denested.

FIGURE 18 is a view similar to FIGURE 15 showing the manner in which the gripper mechanism grasps another type of carton.

FIGURE 19 is a detail view of the carton shown in FIGURE 18 with the cover in an open position.

FIGURE 20 is a detailed view similar to FIGURES 15 and 18 showing the manner in which a tray is grasped.

FIGURE 21 is a detailed view of the type of tray shown in FIGURE 20.

DESCRIPTION OF THE PREFERRED EMBODIMENT

The egg carton and tray dispensing machine consists of a pair of spaced parallel side frame members 31 and 32 which are fastened together to form a rigid framework by a plurality of tie bars 33 which extend between the side frame members 31 and 32 and are secured thereto by screws 34.

Means is provided for forming a magazine 36 between the side frame members 31 and 32 and consists of a downwardly inclined chute-like member 37 which is substantially U-shaped in cross-section as can be seen from FIGURE 4. This chute-like member 37 is secured to the side frame members 31 and 32 by suitable means such as rivets (not shown). As can be seen particularly from FIGURES 1 and 2 of the drawings, the chute-like member 37 is inclined forwardly in a downward direction toward the right as viewed in the FIGURES 1 and 2.

Means is provided for positively advancing the cartons or trays **38** within the magazine **36** and consists of an endless belt **39** formed of a suitable material such as "Neoprene." The upper run of the belt **39** travels on the bottom wall of the chute-like member **37** and has its upper surface underlying and frictionally engaging the lower edges of the cartons or trays in the magazine. The lower run of the belt **39** travels beneath the chute-like member **37**.

A drive mechanism **41** is provided for operating the dispensing machine and consists of an electric motor **42** which is mounted upon a speed reducer **43**. The speed reducer **43** is secured to a pair of the tie bars **33** by screws **44** (see FIGURE 2). The speed reducer **43** is provided with an extended output shaft **46** which extends through the side frame member **32** and drives a single revolution clutch **47** with anti-overtravel means. This clutch is a conventional type and is manufactured by Curtis-Wright. As is well known to those skilled in the art, such a clutch includes a driven member **48** which is provided with a notch **49** so that the driven member **48** can be engaged by a stop lever **51** (see FIGURE 3). The stop lever **51** is pivotally mounted by a pin **52** upon the side frame member **32**. A spring **53** having one end connected to a pin **54** on the frame member **32** and having the other end connected to a pin **56** on the stop lever **51** yieldably urges the inner extremity of the stop lever **51** in an upward direction towards the driven member **48** so that the stop lever **51** will be urged into the notch **49** to stop the driven member **48** from rotation through more than one revolution.

As can be seen from FIGURE 3, the stop lever **51** projects to the rear of the frame member **32** so that it can be operated by hand to permit the stop lever to be moved out of engagement with the driven member **48** against the force of the spring **53**. Additional means is provided for automatically operating the stop lever **51** and moving it out of engagement with the driven member **48** and consists of a solenoid **57** mounted upon the frame member **32** and having its plunger **58** pivotally connected by a pin **59** to the stop lever. It can be seen that when the solenoid **57** is energized, the plunger **59** will be retracted to move the stop lever **51** down against the force of the spring **53** and away from the driven member **48** to permit the same to rotate. The solenoid **57** is adapted to be energized by a pulse from any suitable source as, for example, from an egg grading machine with which the machine is to be operated.

A sprocket **61** (FIGURE 4) is mounted on the clutch **47** and is driven by the clutch **47**. The sprocket **61** drives a chain **62** (see FIGURE 3). The chain **62** drives a sprocket **63** which is mounted upon a main cam shaft **64**. The main cam shaft **64** is rotatably mounted in bearings **66** carried by the side frame members **31** and **32**. A combination speed reducer and pulley **67** is mounted on the main cam shaft **64** between the side frame members **31** and **32** and is utilized for driving the belt **39**. As can be seen from FIGURE 2, the belt travels upwardly and to the rear over a roller **68** rotatably mounted on shaft **69** which is pivotally mounted in the side frame members **31** and **32**. The belt **39** then travels rearwardly and upwardly over a roller **71** carried by a shaft **72** that is slidably mounted in slots **73** provided in brackets **74** secured to the bottom side of the chute-like member **37**. Conventional means (not shown) is provided for adjusting the shaft **72** longitudinally within the slots **73** for tightening the belt **39**. The belt **39** then travels over the bottom wall of the chute-like member **37** over a roller **76** mounted on a shaft **77** mounted between the side frame members **31** and **32**.

The speed reducer portion of the speed reducer assembly and pulley **67** is provided so that the pulley advances $\frac{1}{21}$ of a revolution for each revolution of the main cam shaft **64** for a purpose herinafter described. As shown in FIGURE 5, the speed reducer assembly and pulley **67** consists of a spider **81** which is secured to the shaft **64** by set screws **82**. The spider **81** is provided with two pins **83** which are affixed thereto and which extend in a direction which is parallel to the shaft **64** and are spaced equidistant radially of the shaft **64**. A pair of identical gears **84** and **85** are mounted on a common bushing **86** provided on the top pin **83** as viewed in FIGURE 5. Both the gears **84** and **85** are 16-teeth gears and idle on the pin **83**. Two additional gears **97** and **88** also each having 16 teeth are mounted on the lower spider pin **83** by bushing **89** so that they are one-half tooth out of phase with the top gears **84** and **85**. The gears **84** and **85** and the gears **87** and **88** mesh with two gears **91** and **92** which are provided with 20 and 21 teeth, respectively. The 21-tooth gear **92** is affixed directly to an inner sleeve **93** affixed to the pulley **94**. The 20-tooth gear **91** is affixed to a tube **96** coaxial with the shaft **64** and extending axially of the pulley **94** and out of one end of the pulley as shown in FIGURE 5. The tube **96** is rotatably mounted on the shaft **64**. A collar **97** is mounted on the outer extremity of the tube **96**. A rod **98** is threaded into the collar **97** and is mounted upon a post **99** mounted upon one of the tie bars **33** to prevent the collar **97** from rotating.

From the foregoing construction of the speed reducer assembly and pulley **67**, it can be seen that as the shaft **64** is rotated, the spider **81** is rotated and the idling gears **84** and **85** and **87** and **88** travel around the driver and driven gears, namely, the 20-tooth and 21-tooth gears **91** and **92**, respectively, which advance the gear **92** one tooth for every revolution of the shaft **64**. Thus, the pulley **94** is rotated only once for every 21 revolutions of the shaft **64**.

A carton or tray stop assembly **101** and a carton or tray separator assembly **102** are provided on the front end of the magazine **36**. The carton or tray stop assembly consists of a top stop plate **103** which is mounted on a top stop plate casting **104** by suitable means such as screws **105**. The top stop plate depends vertically from the casting **104**. The casting **104** is provided with a pair of spaced bosses **106** and **107**. The boss **106** is keyed to a bushing **108** by key **109**. A lever arm **111** is keyed to the bushing **108** by a key **112**. The lever arm **111** is connected to one end of rod **113** by a ball and socket connection **114**. The other end of the rod **113** is connected by a ball and socket connection **116** to a lever arm **117**. The lever arm **117** is keyed to a bushing **118** by a key **119**. The key **119** also serves to connect the bushing **118** to a lever arm **120**. The lever arm **120** carries a rotatably mounted cam follower **121** on the outer end thereof which is adapted to engage a cam **112** affixed to the main cam shaft **64**. Because of its function, the cam **122** can be entitled the top stop place cam. A spring **123** has one end secured to the ball and socket connection **116** and has the other end secured to a pin **124** mounted on the side frame member **31** and yieldably urges the cam follower **121** into engagement with the cam **122**. The bushing **108** carries a top pivot shaft **126**, whereas the bushing **118** carries a bottom pivot shaft **127**. The bushing **108** is supported by a pivot arm **128** which is affixed to the shaft **69** by set screw **132**.

The boss **107** is provided with a bushing **129** similar to the bushing **108** except that it is not provided with a keyway which carries the shaft **126**. The bushing **129** is supported by a pivot arm **131** affixed to the shaft **69** by set screw **133**.

The carton or tray stop assembly **101** also includes a bottom stop plate **134** which is mounted in recesses **136** provided in the ends of a pair of arms **137**. The plate **134** is provided with a centrally disposed upwardly extending portion **134***a*. The arms **137** are pivotally mounted upon a shaft **138**. A cam follower **139** is mounted upon a member **141** secured to one of the arms **137**. The cam follower **139** engages a cam **142** mounted upon the shaft **64** and which can be identified as the bottom stop cam.

The carton or tray separator assembly **102** consists of a top separator plate **146**. The top separator plate **146** is

mounted on a casting **147** by screws **145**. The top separator plate is provided with a plurality of spaced downwardly depending portions **146***a*. The casting **147** is secured to the shaft **126** by suitable means such as, for example, screws **148** threaded into the casting **147** and engaging flats **149** provided on the shaft **126**. An arm **151** is affixed to the shaft **126** and is connected by a ball and socket connection **152** to a rod **153**. The other end of the rod **153** is connected by a ball and socket connection **154** to an arm **156**. The arm **156** is affixed to one end of the shaft **127**. A lever arm **157** is also affixed to the shaft **127** and is provided with a cam follower **158** on the end thereof which engages a cam **159** mounted on the shaft **64**. Thus, the cam **159** can be identified as the top separator cam. A spring **155** has one end connected to the ball and socket connection **154** and has the other end connected to a pin **160** mounted on the side frame members **32** and yieldably urges the cam follower **158** into engagement with the cam **160**.

The carton or tray separator assembly **102** also includes a bottom separator plate **161** which is mounted on a casting **162** by screws **160**. The bottom separator plate is provided with a plurality of spaced upwardly extending portions **161***a*. The casting **162** is pivotally mounted upon the shaft **138**. The casting **162** is provided with a recess **163** to accommodate the roller **68**. A cam follower **164** is rotatably mounted upon an arm **166** affixed to the casting **162**. The cam follower engages a cam **167** mounted upon the shaft **64**. Thus, the cam **164** can be identified as the bottom separator cam.

A large cam wheel **165** is mounted on the outer extremity of the shaft **64** and is provided with an inner cam surface **168** which is adapted to be engaged by cam follower **169** rotatably mounted upon an arm **171** affixed to the shaft **69**. A pair of springs **173** are connected to the arms **128** and **131** and to the pins **124** and **160** and yieldably urge the top stop plate **103** against the front surface of the rim of the front carton in the magazine **36**. This cam wheel **165**, as hereinafter explained, is utilized for positioning the top stop plate **103** and the top separator plate **146** so that they always are in the proper position.

A pickup head assembly **176** is provided which is movable between a pickup position in which it can pick up cartons or trays from the magazine **36** and a discharge position away from the magazine. The pickup head assembly consists of a large pickup head casting or member **177**. A large vertical pivot shaft **178** is rotatably mounted in the casting **177**. A gripper assembly **179** is mounted upon the pivot shaft **178** and consists of a gripper mounting plate **181** which is secured to the pivot shaft **178** by a pair of dowel pins **182** and screws **183**. (See FIGURE 11). A bevel turning gear **184** is also mounted on the lower extremity of the pivot shaft **178** between the pivot shaft **178** and the plate **181** and is secured to the shaft by the dowel pins **182** an the screws **183**. The turning gear **184** is adapted to be engaged by a bevel gear **186** splined on a horizontal pivot shaft **187**. The horizontal pivot shaft **187** is pivotally mounted in the large casting **177**. The shaft **187** is affixed to one corner of a three-cornered, substantially triangularly shaped member or casting **188**. Another corner of the casting **188** is affixed to a shaft **189** that is rotatably mounted in a bearing **191** mounted on the side frame member **32** by bolts **192** (see FIGURE 2).

Means is provided for raising and lowering the outer extremity of the member **188** carrying the horizontal pivot shaft **187** about the pivot shaft **189** and consists of a crank arm **193** which is affixed to the shaft **64** and rotates therewith. A ball and socket connection **194** connects one end of a rod **196** to the crank arm. The other end of the rod **196** is connected by a ball and socket connection **197** to the other corner of the member **188**. It can be seen from FIGURE 3 that as the shaft **64** is rotated, the crank arm **193** causes movement of the casting or member **188** between a position represented by the solid line and the broken lines showings of member **188** in FIGURE 3. The side frame member **32** is provided with a cut-out **199** to accommodate this movement.

As hereinbefore explained, the bevel gear **186** is adapted to engage the turning gear **184**. The bevel gear **186** is adapted to be positioned on the shaft **187** in one of two positions. In one position, it is out of engagement with the bevel gear **184**, and in the other position it is in engagement with the bevel gear **184**. The bevel gear **186** is held in the desired position by means of a set screw **201**.

Additional means is provided to ensure that the bevel gear **186** remains in engagement with the turning gear **184** and consists of a pair of split brass bushings **202** (see FIGURE 14). The bushings are provided with extensions **202***a* which are adapted to fit into recesses **203** provided in the member **177** and retained therein by screws **204**. The outermost limit of the gear **186** on the shaft **187** is determined by a snap ring **205** mounted on the shaft **187**.

As hereinafter explained, for straight out or in line delivery, the mounting plate **181** of the gripper assembly is normally secured to the casting **177** by a pair of cap screws **206** (see FIGURE 9). When it is desired to rotate the carton or tray through 90 degrees or more, these cap screws must be removed and the bevel gear **186** engaged with the bevel gear **184** by use of the bushings **202** in the manner shown in FIGURES 13 and 14.

Means is provided for pivoting the pickup head casting **177** about the pivot formed by the horizontal pivot shaft **187** and consists of a cam follower **206** rotatably mounted upon a shaft **207** carried by a bearing **208** mounted upon the side frame member **32** by bolts **209**. The cam follower **206** is adapted to travel in a cam slot or track **211** provided in the large casting or member **177** at a right angle to the shaft **181**. As hereinafter explained, the pivot head roller **206** travels in the cam track to cause pivoting of the casting **177**.

The gripper assembly **179** also includes a pair of end bearing blocks **213** secured to the ends of the gripper mounting plate **181** by cap screws **214**. A pair of spaced parallel gripper shafts **216** and **217** are rotatably mounted in the end bearing blocks **213** by bushings **218** carried by the bearing blocks. Means is provided for interconnecting the gripper shafts **216** and **217** so that they rotate or move in unison and consist of a pair of spur gears **219** mounted on the shafts (see FIGURE 11). Each of the gears **219** is provided with a flat **221** (see FIGURE 11). A lever arm **222** is mounted in each of the flats and is secured to the gear by screws **223**. A pin **224** is carried by each of the lever arms. The pins are interconnected by a spring **226** (see FIGURE 8) which serves to pull the lower extremities of the lever arm **222** towards each other to thereby yieldably retain the same in innermost positions.

The gripper assembly **179** also includes a plurality of gripper members **228** which are mounted on sleeves **229** mounted upon a pair of gripper shafts **216** by suitable means such as Allen head screws **231**. The gripper members **228** form an included angle of approximately 60 degrees (see FIGURE 8) and have teeth-like portions **228***a* arranged generally in a semi-circle to facilitate grasping of the posts of the cartons or trays (see FIGURE 13). Each of the sleeves **229** is provided with a recess **232** which extends through a suitable angle such as 180 degrees which cooperates with a recess **233** provided in the collar **234** which extends through 135 degrees. The collars **234** are secured to the gripper shafts **216** by set screws **236**.

Means is provided for yieldably urging the gripper members **228** in an inward direction independently of each other and consists of a plurality of torsion springs **237** mounted on the shafts **216**. One end of each of the torsion springs engages one of the holes (not shown) of the plurality of holes in the collar **236**, whereas the other end of the spring is disposed in a hole (not shown) in the sleeve **229**. It can be seen that compressive forces can be placed on the grippers **228** merely either by adjusting the collars **236** or by adjusting the hole in which the torsion

spring 237 is located in the collar 234. The form of the recesses 232 and 233 determines the movement which is permitted by the gripper members 228. Thus, when the angles are 135 degrees and 180 degrees only 45 degrees of movement is permitted by the gripper members.

A sheet metal centering trough which is substantially U-shaped and faces downwardly is provided for centering the posts of the cartons or trays before they are gripped by the gripping assembly as hereinafter described. The centering trough 241 is secured to the bearing blocks 213 by screws 242.

The gripper assembly is normally held in an open position by a latching mechanism 246 which consists of a catch 247 mounted on one of the shafts 216 (see FIGURE 8) which is adapted to engage one end of a latch 248 pivotally mounted upon a pin 249 carried by the mounting plate 181. A spring 226*a* is provided for positively urging the latch 248 to assume a position in which it can be engaged by the catch 247.

Means is provided for tripping the latching mechanism 246 when the pickup head assembly 176 is moved to the pick up position and consists of a screw 251 carried by an extension 252 mounted upon side frame member 32 (see FIGURE 3). A lock nut 253 is provided for retaining the screw 251 in the desired position. When the latch 248 engages the outer end of the screw 251 the catch 247 is released to permit the gripper members to move into post-grasping positions. As can be seen from FIGURE 8, the spring 226 normally yieldably holds the gripper members 228 in closed positions whereas they are held in open positions against the force of the spring 226 by the catch 247 engaging latch 248.

Recocking means 256 is provided which is utilized for moving the gripper assembly 179 to an open position to release the posts of the cartons or trays and for recocking the latching mechanism 246. The recocking means 256 consists of a lever arm 257 pivotally mounted on a pin 258 carried by a block 259 mounted upon the mounting plate 181. One end of the lever arm 257 carries a roller 261 rotatably mounted thereon. The other end of the lever arm 257 is pivotally connected to a link 262 by a pin 263. The other end of the link 262 is pivotally connected to an arm 264 by pin 266. The arm 264 is mounted on one of the gripper shafts 216 and, as viewed in FIGURE 10, is mounted on the left-hand gripper shaft 216. The arm 264 is secured to the shaft 216 by a set screw 267 (FIGURE 12). A stop 269 is fastened by screws 271 to the side frame member 32. The stop 269 is adapted to be engaged by the roller 261 carried by the lever arm 257. The positioning of the stop 269 determines when the cocking action will take place and is normally positioned so that the gripper assembly 179 is cocked and permits engagement of the catch 247 with the latch 248. Means (not shown) is provided for permitting the vertical adjustment of the stop 269. For example, such means can consist of slots provided in the member 269 to permit vertical adjustment with respect to the screws 271.

In the event the pickup head assembly 176 is rotated through 90 degrees, a separate stop member 273 (see FIGURE 2) is provided which is secured to the side frame member 32 by screws 274. The stop member 273 is adapted to be engaged by the roller 261 to cause recocking of the latching mechanism when the pickup head assembly 176 has been rotated through 90 degrees.

The manner in which the gripper assembly 179 grips the cartons or trays in the magazine 36 is shown in FIGURES 15–21. Thus, in FIGURES 15, 16 and 17, there is shown a center-fold carton 281 which is described in U.S. Letters Patent No. 3,191,844. Such a carton is manufactured out of pulp and is provided with a bottom section 282 which has two rows of six pockets 283 disposed in rows which are parallel to each other. The bottom section is also provided with center posts 284 which extend upwardly above the main surface 286 of the bottom section and within the outer perimeter. As can be seen, a plurality of such posts are provided. For example, where six pockets are provided on each row, five of such posts can be provided. The posts have slots 287 in alignment with each other and extending parallel to the rows and longitudinally of the bottom section. After eggs have been placed in the pockets 283, the eggs can be covered by a pair of side covers 288 hingedly secured to the bottom section 282 whereby the cover may be folded over the adjacent row of eggs and have its outermost side edge pass into the slots 287 in the posts 284 and be frictionally retained therein.

Means is provided within the magazine 36 for positioning the cartons 281 so that the center posts 284 are in alignment with the center line of the gripper assembly 179 when the gripper assembly 179 is moved into position to grasp one of the cartons as shown in FIGURE 15. Such means consists of a pair of right-angle guide members 291 and 292 which are secured to the chute-like member 237 by suitable means such as screws (not shown). As can be seen from FIGURES 15 and 16, the guide members are adapted to engage the outer extremities of the covers 288 of the cartons 281. As can be seen particularly in FIGURE 15, the grippers 228 are provided with inwardly extending portions which are provided with serrated outer extremities which are adapted to engage the posts 284.

Another type of carton 296 is shown in FIGURES 18 and 19 of a conventional type. It is provided with a bottom section 297 which also has two rows of six pockets 298 each arranged so they are parallel to each other with center posts 299 extending upwardly between the rows of pockets. It is provided with a cover 301 which is hinged on one side and which is adapted to cover both rows of pockets and is adapted to be held in a closed position by a flap 302 hinged on the other side of the bottom section 297. As can be seen in FIGURE 19, the guide members 291 and 292 are shifted in their positions in the chute-like member 37 so that on one case the longer leg of a member 291 engages the side flap 302 and the shorter leg of the guide member 292 engages the cover 301 so as to position the carton 296 so that the posts 299 are again in alignment with the center line of the gripper assembly 179.

It is readily apparent that the apparatus can be utilized for different types of cartons, it merely being necessary that the cartons be provided with center posts which extend upwardly from the bottom section so that they can be grasped with the gripper assembly 179 of the type disclosed.

As shown in FIGURES 20 and 21, the apparatus can also be used with trays 306. The trays 306 are also conventional and can be formed of a suitable material such as pulp. Such trays are conventionally provided with five rows of six pockets 307 each. The tray is also provided with raised posts 308 which extend upwardly between the pockets and are also formed in rows within the outer perimeter of the tray. Thus, there are provided six rows of posts in one direction and seven rows of posts in another direction. The guide members 291 and 292 are positioned so that their short legs are in engagement with the tray and serve to guide the tray such that the third row of posts 308 is in line with the center line of the gripper assembly 179 as shown in FIGURE 20.

The bottom stop plate 134 and the top stop plate 103 as well as the bottom separator plate 161 and the top separator plate 146 may be constructed slightly differently to accommodate the different types of cartons and trays. It is preferably desirable that each of the plates be provided with projecting portions which are adapted to engage the appropriate parts of the cartons or trays to hold and separate the same. The different construction between the various plates for the different sizes of cartons and trays is relatively minor and, therefore, will not be disclosed in detail.

Means is provided in the magazine **36** for sensing when the magazine is nearly empty and consists of a sensing member **311** (FIGURE 2) which is mounted upon a block **312** affixed to a rod **313** which is pivotally mounted in the side frame members **31** and **32**. An arm **314** is mounted upon the rod **313** and is adapted to engage the microswitch **316** mounted upon the side frame member **32**. The microswitch **316** is connected into the circuitry for energizing the solenoid **57** so that when the sensing member **311** swings to an upward position as shown in FIGURE 2 when there are not sufficient cartons within the magazine, the microswitch **316** will be operated to move to an open position to prevent further energization of the solenoid **57**.

A pair of cover plates **318** are mounted on the side frame members **31** and **32** and serve to cover many of the moving parts of the apparatus and, therefore, serve as a safety device in addition to adding to the appearance of the machine.

Operation of the egg carton and tray dispensing machine may now be briefly described as follows. Let it be assumed that it is desired to deliver cartons such as cartons **281** to an egg grading and filling machine such as that described in U.S. Letters Patent No. 3,224,610 which is provided with means for supplying a pulse each time a carton is required by the machine. Let it be assumed that a sufficient number of cartons **281** have been placed in the magazine **36** with the posts extending forwardly so that the sensing lever **311** is depressed and so that the first carton in the stack in the magazine is in engagement with the stop plates **134** and **146**.

During operation of the apparatus, the motor **42** is running continuously and is driving the clutch **47** through the speed reducer **43**. When the solenoid **57** receives a pulse from the egg grading machine, the stop lever **51** is pulled downwardly to release the driven member **48** which travels through one complete revolution until the stop lever **51** seats in the notch **49**. As the driven member **48** is rotated, the chain **62** is driven to cause rotation of the sprocket **63**. Rotation of the sprocket **63** causes movement of the crank arm **193** which causes the rod **196** to be pulled to the left as viewed in FIGURE 3 to cause the casting **188** to be moved about the pivot point **189**. Movement of the casting **188** about the pivot **189** causes the horizontal pivot shaft **187** of the pickup head assembly **176** to be raised within the cut-out **199** provided in the side frame member **32** to cause it to travel in the arcuate path shown by the arrow **321** in FIGURE 3. As the pickup head assembly is raised, the pivot head roller **206** travels downwardly in the cam track or slot **211** provided in the casting or member **177** so that the casting **177** is pivoted or rotated on the horizontal pivot shaft **187**. When straight line delivery is desired, the bevel gear **186** is out of engagement with the turning gear **184** and the gripper assembly **179** is not rotated upon pivotal movement of the casting **177**. Travel of the pivot head roller **206** within the cam track or slot **211**, however, does cause the pickup head assembly **176** with gripper assembly **179** to be shifted from a horizontal discharge position into a carton pickup position in which it is inclined slightly beyond the vertical as viewed in FIGURE 2. This movement of the gripper assembly **179** is such that the center line of the gripper assembly and the centering trough **241** are in alignment with the posts **284** of the leading carton **281** and so that the grippers **228** are substantially parallel to the exposed surface of the carton **281**.

At the time that the horizontal pivot shaft **187** reaches its uppermost position shown in FIGURE 3, the latch **248** engages the screw **251** which causes it to trip the catch **247**. Tripping of the catch **247** permits the spring **226** to yieldably bring the grippers **228** into engagement with the posts **284** of the carton **281** as shown in FIGURE 15. The gripper shafts **216** move in unison because they are interconnected by the spur gears **219**. A pair of grippers **228** are provided for each of the posts and engage opposite sides of the posts. As can be seen, the grippers **228** can operate independently of each other because they are separately spring-loaded by torsion springs **237** so that each pair of grippers firmly grasps each of the posts provided in the open carton. This serves to uniformly distribute the loading on the posts **284** so that the posts are not torn or damaged.

During the time that the pickup head assembly **176** is being moved into engagement with the open carton, the main cam shaft **64** is also being driven through one revolution to cause movement of the cams **122, 142, 159, 167** and **165** carried thereby. Because of this movement of these cams, the bottom stop plate **134** and the top stop plate **103** are moved downwardly and upwardly respectively to clear the carton, while at the same time the bottom separator plate **161** and the top separator plate **146** are moved upwardly and downwardly respectively in between the leading carton and the next succeeding carton as shown particularly in FIGURE 2. At this same time, the cam wheel **165** causes the top stop plate **103** and the top separator plate **146** carried by the shaft **126** to assume a predetermined longitudinal position with respect to the magazine **36** so that the leading carton is in a predetermined position at the time the pickup head assembly **176** reaches the pick-up position. This ensures that the carton being picked up will be properly grasped.

Continued movement of the crank arm **64** causes the horozontal pivot shaft **187** to travel an accurate return path identical to that which it travelled in coming to its uppermost position. This causes the pickup bead assembly **176** to move away from the magazine and carry with it the leading carton which has been released by the stop plates **134** and **103** and the posts of which have been grasped by the gripper mechanism **228**. Only one carton is removed from the stack of cartons within the magazine because the separator plates **161** and **141** prevent the next succeeding carton from following the leading carton which is being removed by the pickup head assembly.

Upon further movement of the horizontal pivot shaft, the pickup head assembly again is swung downwardly so that it moves into a discharge position in which it lies in a horizontal plane. At the time the pickup head comes into this position, the roller **261** strikes the stop **269** to operate the lever arm **257** which pulls upwardly on the arm **264** to cause counter-clockwise rotation of the gripper shafts **216** against the force of the spring **226** to move the grippers toward an open position away from the center post **284** of the carton **281** to permit the carton **281** to drop therefrom onto a conveyor or other suitable means for delivering the same to the egg grading machine. As explained previously, the stop **269** is adjusted so that the roller **261** causes the shafts **116** to be rotated sufficiently far so that the catch **247** can be engaged again by the latch **248** to recock the gripper assembly **179** to hold the grippers **228** in their normally open position.

During this latter half of the cycle, the stop plates **134** and **103** are again moved inwardly with respect to the edges of the cartons within the magazine **36** and yieldably engage the rim of the front carton. At the same time, the separator plates **161** and **103** are moved outwardly away from the side edges of the cartons to permit the cartons to be advanced into engagement with the stop plates **134** and **103** by the conveyor belt **39**. As explained previously, the conveyor belt **39** is advanced by the speed reducer assembly and pulley **67** in such a manner that for each revolution of the main cam shaft **64**, the speed reducer assembly and pulley **67** is advanced $\frac{1}{21}$ of a revolution. The thickness of the cartons is such that the $\frac{1}{21}$ revolution advances the belt **39** approximately $\frac{7}{16}$ of an inch. This advancement of the belt **39** should preferably be a distance which is slightly greater than the spacing between individual cartons in the stack within the magazine. Thus, if the spacing between the cartons is approximately ¼ inch, the belt, as in the present example, can

be advanced 7/16 of an inch so that there is a positive delivery of cartons up against the top and bottom stop plates.

As soon as the cartons have been advanced against the stop plates, the cycle is completed and the driven member **48** is stopped by the stop lever **51**. When the stop plates **103** and **134** are in engagement with the rim of the front carton, the separator plates **146** and **161** are directly behind this rim of the front carton even though the bundle may not be square. Just before separation of the front carton after the separator plates are in their separating positions, the cam wheel **165** centers the arms **128** so that the front carton is always in the same generally vertical position when it is picked up by the pickup head assembly to facilitate even gripping of the posts of the cartons.

The denesting operation is not repeated until the next stop pulse is received by the solenoid **57** after which the same sequence of operation takes place.

Now let it be assumed that instead of delivering the cartons straight out from the egg carton and tray dispensing machine, it is desired to deliver the cartons at an angle which is 90 degrees from the angle at which they are in the magazine. When this is the case, the bevel gear **186** is moved outwardly into engagement with the turning gear **184** and is held in position by bushings **202** which are fastened in place by the screws **204**. At the same time, the cap screws **206** are removed and before engagement of the gears **186** and **184**, the gripper assembly **179** is rotated through 90 degrees. Upon actuation of the solenoid **57**, the same sequence of operations takes place as hereinbefore described. However, when the pickup head assembly **176** moves from the horizontal discharge position into the pickup position in which the gripper assembly faces the leading carton in the magazine, the gripper assembly **179** is rotated through 90 degrees about a pivot formed by the vertical pivot shaft **178**. This occurs because the gear **186** is splined to shaft **187** which is keyed to the casting **188**. Since gear **186** is held stationary, pivoted movement of the casting **177** causes rotation of the turning gear **184**.

After the carton has been picked up from the magazine, the gripper assembly **176** and the carton carried thereby are rotated through 90 degrees. The carton is dropped by the gripper assembly after it has been rotated through 90 degrees and after the pickup head assembly has reached the discharge position.

The mode of operation for other types of cartons and for the trays is very similar to that hereinbefore described. It is merely necessary to shift the positions of the guide members **291** and **292** within the magazine. For trays it may be necessary to slightly modify the stop and separator plates. Thus, it can be seen that the machine is very versatile in that it can handle cartons or trays of various types. It is also a type of machine which with minor modifications can deliver the cartons in a straight line, or in other words, in a line which is in line with the manner in which the trays or cartons are positioned in the magazine or can rotate the cartons through an angle of 90 degrees from the position in which they are in the magazine.

The operation of the machine is also such that the pickup head assembly is positively moved into engagement with the open carton and then is cammed downwardly to positively bring the carton to the desired position and to release the same. The construction of the gripper mechanism is such that the posts of the carton are individually gripped within the outer perimeter of the carton which ensures that the carton is firmly gripped by the gripper assembly and will be positively withdrawn from the stacks of cartons without danger of damaging the carton. Because of the individual spring loading of the grippers **228**, the grip which is applied to the carton to be removed is uniformly distributed over the carton. Since the gripper assembly grips the posts of the cartons, there is no damage to the side edges of the cartons as may occur with conventional denesters. Utilizing a gripper mechanism which grasps the posts also has an advantage in that the posts of the cartons are always in good condition and generally are not damaged during shipment of the nested cartons by the manufacturer to the user. This ensures that the trays or cartons can be readily denested by the machine.

The magazine provided for the cartons or trays is only inclined slightly downwardly and the belt **39** is provided for positively advancing the cartons. For this reason, very little weight of the cartons is against the stop plates or the separator plates at any time which facilities separating the cartons one from another and also minimizes any damage to the ends of the cartons at the time they are being separated.

The machine also has an advantage in that it is relatively simple and can be manufactured at relatively low cost.

I claim:

1. In a dispensing machine for cartons or trays of the type having posts inside the outer perimeter of the carton or tray, a magazine for receiving a plurality of nested cartons or trays, said magazine being positioned so that the cartons or trays are disposed in generally vertical planes with their posts extending in a forward direction, a pickup head, means for moving said pickup head between a pickup position in which it is in a generally vertical position for picking up cartons or trays from the magazine and a discharge position away from the magazine in which it is in a generally horizontal position above the carton or tray to be discharged, said pickup head having post-gripping means for gripping the posts of said cartons or trays and means operable with said means for moving said pickup head for moving said post-gripping means between a post-gripping position in which the posts are gripped when the pickup head is moved to the pickup position and a post-releasing position when the pickup head is moved to the discharge position.

2. A dispensing machine as in claim **1** wherein said post-gripping means includes a pair of gripper members movable into engagement with the outer surface of at least certain of the posts.

3. A dispensing machine as in claim **2** wherein said post-gripping means includes means for applying an independent force to each of the posts which is independent of the gripping action applied to the other posts.

4. A dispensing machine as in claim **1** together with means for rotating the pickup head through a substantial angle after it is moved from the pickup position and before it enters the discharge position.

5. A dispensing machine as in claim **1** wherein said means for moving said pickup head between the pickup position and the discharge position includes means forming a cam track, a cam follower movable in the cam track, said means for moving the pickup head including means for moving the pickup head in an arcuate path so that said cam follower travelling in said cam track causes said pickup head to be shifted from the horizontal position and into the substantially vertical position when the pickup head is in the pickup position.

6. A dispensing machine as in claim **1** wherein said means for gripping the posts of said cartons or trays includes a plate, a pair of parallel shafts rotatably mounted upon the plate, a plurality of spaced gripper members mounted in oppositely facing pairs on said shafts, springs mounted on the shafts and engaging the gripper members for urging the gripper members towards a post-gripping position, spring means carried by the shafts and tending to cause rotation of the shafts in directions to cause the gripper members to move toward post-gripping positions, a latch carried by the plate, gear means mounted on the shafts and causing said shafts to rotate in unison, a catch member mounted on one of said shafts and adapted to engage said latch to retain said gripper members in post-releasing positions against the force of the spring means carried by the shafts, means for engaging the latch when the pickup head is moved to a pickup position to release the catch and to permit the spring means to urge the gripper means to post-engaging posi-

tions, said means for moving said post-gripping means to post-releasing positions including a lever arm mounted upon one of said shafts, and means engageable when said pickup means moves to a discharge position for operating said last-named lever arm for rotating said shafts to cause the gripper members carried by the shafts to be moved to post-releasing positions and also to cause said catch to be engaged by said latch.

7. A dispensing machine as in claim 1 together with means carried by the pickup head for centering the posts in the pickup head to facilitate grasping of the same by the post-grasping means.

8. A dispensing machine as in claim 4 wherein said means for rotating the pickup head includes means for rendering the same inoperative.

9. A dispensing machine as in claim 4 wherein said means for rotating the pickup head includes a shaft secured to the pickup head and permitting rotational movement of the same, a turning gear carried by the shaft, and a gear movable into engagement with the turning gear.

10. In a dispensing machine for cartons or trays of the type having posts inside the outer perimeter of the carton or tray, a magazine for receiving a plurality of nested cartons or trays, said magazine being inclined downwardly and forwardly, carton or tray stop means mounted on the forward end of the magazine for preventing cartons from sliding out of the magazine, a pickup head, means for moving said pickup head between the pickup position in which it can pickup cartons or trays from the magazine and a discharge position away from the magazine, said pickup head having a post-gripping means for gripping the posts of said cartons or trays, means operable with said means for moving said pickup head for moving said post-gripping means between a post-gripping position in which the posts are gripped when the pickup head is moved to the pickup position and a post-releasing position when the pickup head is moved to the discharge position, means operable with said pickup means for moving said stop means out of engagement with the cartons or trays when the pickup head is moved to the pickup position to permit a carton or tray to be removed from the magazine, a belt disposed in the magazine and underlying the cartons or trays, and means for advancing the belt a predetermined distance each time a carton or tray is removed from the magazine to advance the cartons or trays into engagement with the stop means.

11. A dispensing machine as in claim 10 together with separator means for preventing more than one carton or tray from being removed from the magazine at one time and means operable with the operation of said pickup head for operating said separator means.

12. A dispensing machine as in claim 11 together with means for adjusting the position of said stop means and said separator means so that at the time that the pickup head is in the pickup position, the leading carton or tray is in a pickup position.

13. A dispensing machine as in claim 12 wherein said means for moving said pickup head between the pickup position and the discharge position includes a main shaft, a single revolution clutch for driving said main shaft, drive means for driving said single revolution clutch, means for operating the said single revolution clutch, crank means mounted on said shaft for moving said pickup head, said means for operating said stop means and said separator means including cams mounted on said main shaft and wherein said means for positioning said stop means and said separator means includes an additional cam mounted on said main shaft.

14. A dispensing machine as in claim 11 wherein said stop means includes top and bottom stop plates and wherein said separator means includes top and bottom separator plates.

References Cited

UNITED STATES PATENTS

3,341,072 9/1967 Schoot ..... 221—213

FOREIGN PATENTS

997,520 7/1965 Great Britain.

STANLEY H. TOLLBERG, Primary Examiner