Nov. 14, 1944. R. F. KNIGHT 2,362,639

SHOE

Filed Dec. 12, 1942

Fig. 1

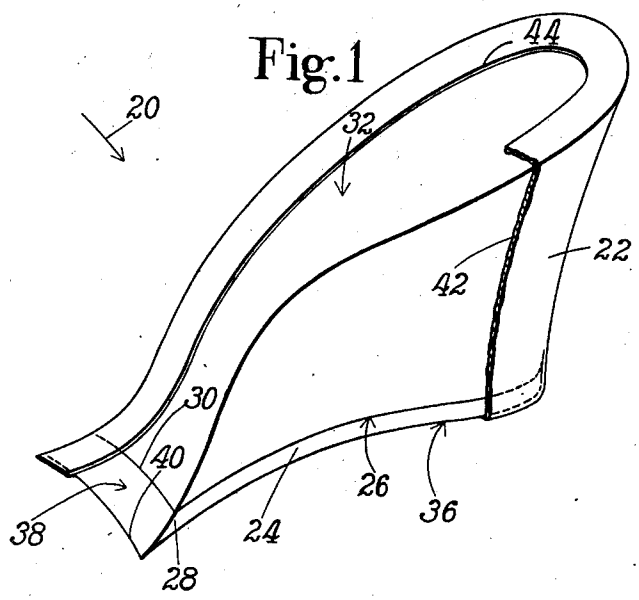

Fig. 2

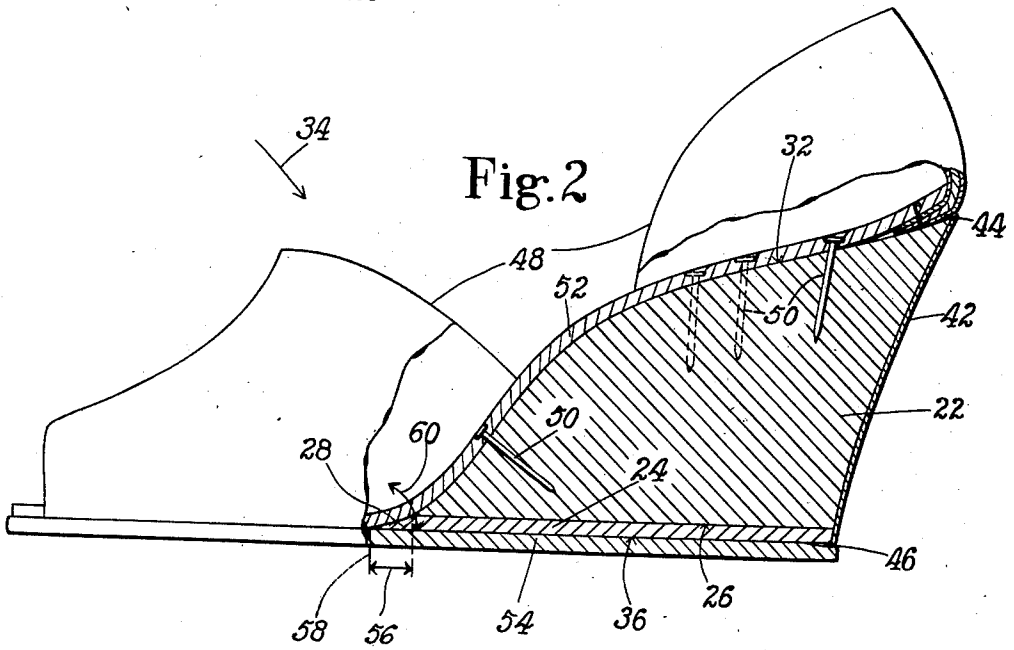

INVENTOR

Ralph F. Knight

By his attorneys

Merwin & Colley

Patented Nov. 14, 1944 2,362,639

UNITED STATES PATENT OFFICE

2,362,639

SHOE

Ralph F. Knight, Beverly, Mass., assignor to United Shoe Machinery Corporation, Flemington, N. J., a corporation of New Jersey

Application December 12, 1942, Serial No. 468,766

8 Claims. (Cl. 36—19.5)

This invention relates to shoes and is illustrated as embodied in a beach clog having a wedge heel.

There is a tendency for the outsoles of shoes such, for example, as beach clogs which have wedge heels made of wood or other rigid material, to crack widthwise in the vicinity of the forward edge of the heel. This cracking is due partly to the fact that in the clogs now being used the flexing of the clog in walking is concentrated at the forward edge of the rigid heel, which edge is usually located a substantial distance rearward of the break line of the shoe. Such flexing usually, before cracking the outsole, tends to cause the front portion of the rigid heel to become detached from the insole and the outsole, due to the constant shuffling action of the forward portion of the rigid heel with relation to said insole and outsole, with the result that the shank portion of the clog becomes flimsy.

It is an object of the present invention to provide an improved shoe of the general type above mentioned having none of the above drawbacks.

With the above considerations in view and in accordance with a feature of the present invention, there is provided a wedge heel comprising attaching and tread faces intersecting in an edge, the major portion of said heel being rigid but the entire forward end portion of the heel in the vicinity of said edge being made of flexible material resistant to abrupt bending. The rigid portion of the illustrative wedge heel consists of a wedge-shaped wood block, attaching and tread faces of which intersect in a forward edge. A thick layer of flexible material resistant to abrupt bending is secured to the tread face of the block and has a forward beveled portion which projects in front of said edge of the block and has a face continuous with the attaching face of the block.

In the illustrative shoe in which the above-described heel is incorporated, the forward end of the rigid block is located a substantial distance back of the break line of the shoe, to which line the beveled portion of said layer of flexible material extends. The insole and the outsole of the shoe are adhesively secured to the forwardly projecting end of said material, the arrangement being such that the flexing of the shoe in walking starts at the ball line of the shoe and is distributed lengthwise along the projecting portion of said layer of material in the form of a gradual curve. With the above construction the aforesaid drawbacks are overcome and a durable shoe which is comfortable on the foot of the wearer is provided.

The various features of the invention will be understood and appreciated from the following detailed description read in connection with the accompanying drawing, in which

Fig. 1 is an angular view of an improved wedge heel; and

Fig. 2 is a side elevation, partly in central vertical section, of a shoe in which the heel shown in Fig. 1 has been incorporated.

The illustrative wedge heel **20** (Fig. 1) comprises a wood heel block **22** and a thick leather lift or layer **24** which is adhesively secured to a tread face **26** of the block and has a beveled portion **28** projecting forwardly from an edge **30** formed by the intersection of the tread face **26** and an attaching face **32** of the block. The lift **24** is made of leather, the thickness and quality of the same being such that when the wedge heel is incorporated in a shoe, such, for example, as a beach clog **34** (Fig. 2), the forwardly projecting portion **28** of the lift, which preferably extends from one side of the block **22** to the other, is resistant to abrupt bending when the clog is used in walking.

The bottom face of the forwardly projecting portion **28** is in a continuation of the plane of the flat tread face **36** of the lift **24** and a forward upper beveled face **38** of the lift is approximately continuous with the attaching face **32** of the block. The entire bottom face **36** of the lift **24** may be referred to as the tread face of the wedge heel **20**, and the attaching face **32** of the block **22** and the beveled face **38** of the lift **24** together may be referred to as the attaching face of the wedge heel. With the above construction, it will be clear that the major portion of the wedge heel **20** is rigid and that the apex portion of the heel in the vicinity of the edge **40** in which the attaching and tread faces of the wedge heel intersect is made of flexible material resistant to abrupt bending.

After the lift **24** has been cemented to the block **22**, the resultant wedge heel has a cover **42** applied to its side and rear faces, upper and lower projecting margins **44**, **46** (Fig. 2) of the cover being inturned upon and secured to the attaching and tread faces, respectively, of the heel.

The wedge heel **20** is secured to the upper **48** of the shoe **34** by a suitable adhesive and also by nails **50** which are driven through an insole **52** of the shoe and into the block **22**, care being taken to insure that the lower part of the attaching face of the heel, including the beveled face **38** of the lift **24**, shall be effectively secured adhesively to the insole. An outsole **54** which is made of

leather or of vulcanized rubber composition, is secured by adhesive to the forepart of the shoe and to the entire tread face of the lift **24**.

It will be noted that the edge **30** of the wood heel block **22** is located a distance **56** rearward of the break line **58** of the shoe **34** and that the forward edge **40** of the lift **24** extends approximately to said break line. By making the forward end of the heel of flexible material which is resistant to abrupt bending, the flexing of the shoe in walking is distributed along an "easy" curve which corresponds to the walking curve of the foot. With such a construction there is no abrupt bending of the shoe bottom at the edge **30** of the wood heel block **22**, said edge, together with the parts to which it is secured, being swung in a gradual curve when the shoe is being worn. It will also be noted that with the above shoe construction there is no tendency for the forward end portion of the wood heel block **22** to separate from the lift **24** and/or from the insole **52**, since these parts move together in an arc **60**, the bending of the shoe parts taking place along the entire projecting beveled portion of the lift, which, as above stated, is resistant to abrupt bending. Since the forward end of the block has little tendency to move with relation to the shoe parts to which it has been secured and the edge **30** of the block is spaced from the outsole by the lift, it will be clear that the shank portion of the shoe will always remain rigid and strong during the life of the shoe.

Having described my invention, what I claim as new and desire to secure by Letters Patent of the United States is:

1. A wedge heel comprising a rigid wedge block and a thick layer of flexible material resistant to abrupt bending secured to the tread face of the block and having a forwardly beveled portion which extends a substantial distance beyond the forward edge of said block.

2. A wedge heel comprising a rigid wedge block and a thick layer of flexible material resistant to abrupt bending secured to the tread face of the block and having a beveled portion which extends forwardly of the forward edge of said block and from one side of the block to the other.

3. A wedge heel comprising a rigid block having intersecting attaching and tread faces forming an edge, and a layer of flexible material which is resistant to abrupt bending and is secured to the tread face of the block and has a beveled portion which extends forwardly of said edge of the block and has a face continuous with the attaching face of the block.

4. A wedge heel comprising a rigid block having tread and attaching faces the forward ends of which intersect in an edge, and a layer of flexible material resistant to abrupt bending secured to the tread face of the block and having a forward end portion which extends beyond said edge of the block and which extends from one side of the block to the other and has a face continuous with the attaching face of the block.

5. A wedge heel comprising a rigid block having intersecting tread and attaching faces forming an edge, and a layer of flexible material resistant to abrupt bending secured to the tread face of the block and having a beveled portion which projects forwardly from said edge of the block and from one side of the block to the other, a forward projecting portion of said material having a face which is continuous with the attaching face of the heel.

6. A shoe comprising a rigid wedge heel having tread and attaching faces intersecting in an edge, a lift of flexible material resistant to abrupt bending secured to the tread face of the block and having a beveled portion which projects forwardly from said edge, an insole secured to the attaching face of the block, and an outsole which is secured to the lift, said forwardly projecting portion of said lift being interposed between and adhesively secured to the insole and to the outsole.

7. A shoe comprising a rigid wedge block having tread and attaching faces intersecting in an edge, a lift of flexible material resistant to abrupt bending secured to the tread face of the block and extending from one side of the block to the other, said lift having a portion which is V-shaped in cross section, projects forwardly from said edge, and has a face which is continuous with the attaching face of the block, an insole secured to the attaching face of the block and to the projecting portion of the lift, and an outsole secured to the lift.

8. A shoe comprising a rigid wedge block having tread and attaching faces intersecting in an edge which is located a substantial distance rearwardly of the break line of the shoe, a lift of flexible material resistant to abrupt bending secured to the tread face of the block and having a beveled portion which projects forwardly from said edge of the block to the break line of the shoe and upper and lower faces of which are adhesively secured to the insole and to the outsole respectively of the shoe.

RALPH F. KNIGHT.