(12) INTERNATIONAL APPLICATION PUBLISHED UNDER THE PATENT COOPERATION TREATY (PCT)

(19) World Intellectual Property Organization
International Bureau

(43) International Publication Date
10 December 2009 (10.12.2009)

PCT

(10) International Publication Number
WO 2009/147233 A1

(51) International Patent Classification:
B60R 21/26 (2006.01)

(21) International Application Number:
PCT/EP2009/056928

(22) International Filing Date:
5 June 2009 (05.06.2009)

(25) Filing Language: English

(26) Publication Language: English

(30) Priority Data:
08 53779 6 June 2008 (06.06.2008) FR

(71) Applicant *(for all designated States except US)*: **AUTOLIV DEVELOPMENT AB** [SE/SE]; Wallentinsvägen 22, S-447 83 Vargarda (SE).

(72) Inventors; and
(75) Inventors/Applicants *(for US only)*: **PATTON, Yvonnig** [FR/FR]; 18 Ter rue Félix le Dantec, F-29470 Plougastel Daoulas (FR). **PEREMARTY, François** [FR/FR]; 18 Allée Alexandre Verchin, F-29000 Quimper (FR).

(74) Agent: **BRANGER, Jean-Yves**; Cabinet Regimbeau, Espace Performance, Batiment K, F-75847 Paris Cedex 17 (FR).

(81) Designated States *(unless otherwise indicated, for every kind of national protection available)*: AE, AG, AL, AM, AO, AT, AU, AZ, BA, BB, BG, BH, BR, BW, BY, BZ, CA, CH, CL, CN, CO, CR, CU, CZ, DE, DK, DM, DO, DZ, EC, EE, EG, ES, FI, GB, GD, GE, GH, GM, GT, HN, HR, HU, ID, IL, IN, IS, JP, KE, KG, KM, KN, KP, KR, KZ, LA, LC, LK, LR, LS, LT, LU, LY, MA, MD, ME, MG, MK, MN, MW, MX, MY, MZ, NA, NG, NI, NO, NZ, OM, PG, PH, PL, PT, RO, RS, RU, SC, SD, SE, SG, SK, SL, SM, ST, SV, SY, TJ, TM, TN, TR, TT, TZ, UA, UG, US, UZ, VC, VN, ZA, ZM, ZW.

(84) Designated States *(unless otherwise indicated, for every kind of regional protection available)*: ARIPO (BW, GH, GM, KE, LS, MW, MZ, NA, SD, SL, SZ, TZ, UG, ZM, ZW), Eurasian (AM, AZ, BY, KG, KZ, MD, RU, TJ, TM), European (AT, BE, BG, CH, CY, CZ, DE, DK, EE, ES, FI, FR, GB, GR, HR, HU, IE, IS, IT, LT, LU, LV, MC, MK, MT, NL, NO, PL, PT, RO, SE, SI, SK, TR), OAPI (BF, BJ, CF, CG, CI, CM, GA, GN, GQ, GW, ML, MR, NE, SN, TD, TG).

Declarations under Rule 4.17:

— *as to applicant's entitlement to apply for and be granted a patent (Rule 4.17(ii))*

— *as to the applicant's entitlement to claim the priority of the earlier application (Rule 4.17(iii))*

[Continued on next page]

(54) Title: A PYROTECHNIC GAS GENERATOR WITH COMBUSTION AND DIFFUSION CHAMBERS OF DIFFERENT SECTIONS

FIG. 1

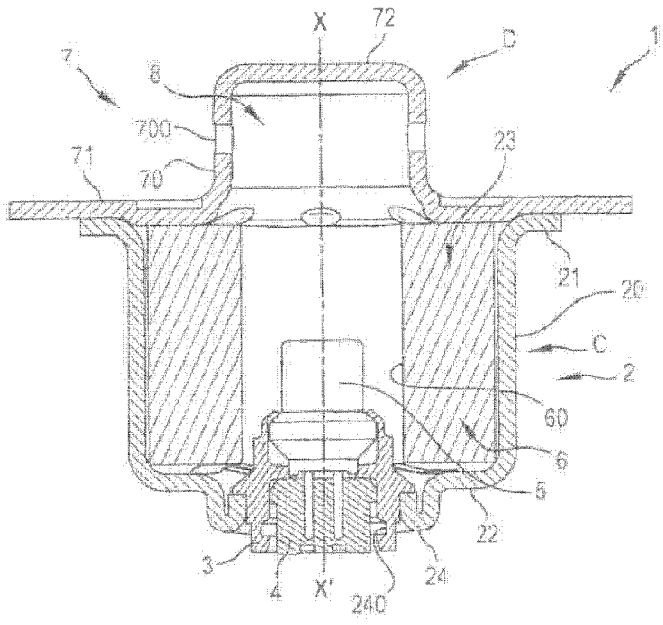

(57) Abstract: This present invention relates to a pyrotechnic gas generator intended for motor-vehicle safety, which includes a combustion chamber (C) of cylindrical or approximately cylindrical shape, in which is present an initiator (5) associated with at least one solid pyrotechnic charge (6), as well as a diffusion chamber that communicates with the combustion chamber (C), and that receives the gases generated by the said charge (6) and transfers them to the outside via at least one evacuation opening (700). According to the invention, the said diffusion chamber (D) : extends parallel to the longitudinal axis (X, X') of the said combustion chamber (C), in the extension of one of its end faces; is also of generally cylindrical or approximately cylindrical shape, but with a cross section that is less than that of the said combustion chamber; and is devoid of means for filtering the gases that pass through it.

WO 2009/147233 A1

Published:

— *with international search report (Art. 21(3))*

A PYROTECHNIC GAS GENERATOR WITH COMBUSTION AND DIFFUSION CHAMBERS OF DIFFERENT SECTIONS

The present invention relates to a pyrotechnic has generator intended for motor vehicle safety.

Said generator is preferably intended to allow inflating of a safety cushion generally called an airbag.

Generators are known which comprise a combustion chamber of cylindrical or approximately cylindrical shape, in which an initiator is contained associated with at least one solid pyrotechnic charge. Said generator also comprises a diffusion chamber which communicates with the combustion chamber; it receives gases generated by the charge and transfers these gases externally (here to an airbag) via at least one evacuation orifice.

Said generators are generally satisfactory.

However, the majority thereof consist of relatively numerous parts and items of equipment.

Additionally, the securing of said generator to a vehicle requires a container with frangible or mobile wall of substantial size to receive both this generator and the airbag that is folded away and is intended to be inflated.

This is not acceptable when the generator is intended to equip a vehicle whose public retail price is relatively low, and for which it is sought to reduce the cost price of this set of equipment.

The purpose of the present invention is to overcome these difficulties by proposing a generator which functions in fully conventional manner, but whose structure is simplified and whose mounting inside a vehicle dashboard is made possible using a container of smaller volume.

Therefore, the present invention relates to a pyrotechnic gas generator intended for motor vehicle safety, which comprises a combustion chamber of cylindrical or approximately cylindrical shape, in which an initiator is contained associated with at least one solid pyrotechnic charge, and a diffusion chamber which communicates with the combustion chamber, and which receives the gases generated by said charge and transfers these gases towards the outside via at least one evacuation opening.

This generator is noteworthy in that said diffusion chamber:

- extends parallel to the longitudinal axis of said combustion chamber, in the continuation of one of its ends;
- is also of generally cylindrical or approximately cylindrical shape but whose cross section is shorter than that of said combustion chamber;
- is devoid of gas filtering means for the gases passing through it.

According to other advantageous, non-limiting characteristics:

- said combustion and diffusion chambers extend along the same axis;
- the cross-section of the said diffusion chamber is about one half shorter than that of said combustion chamber;
- said combustion chamber is essentially delimited by a box-shaped part with open top, and by a lid closing this top part which forms one piece with said diffusion chamber;
- it is provided with at least one protective cap that gives way only when the predetermined gas pressure is reached in the combustion chamber;

- said protective cap is arranged in the transition area between the two chambers;
- said protective cap extends inside the diffusion chamber and seals said evacuation orifice.

Other characteristics and advantages of the present invention will become apparent on reading the following description of some preferred embodiments.

This description is made with reference to the appended drawings in which:

- figure 1 is a sectional view along a longitudinal, median plane of a first embodiment of the generator;
- figure 2 is a similar view to figure 1 of a second embodiment of said generator.

The generator in figure 1 has a longitudinal axis of symmetry XX'.

This generator 1 essentially consists of a casing 2, and a lid 7 which are made in metal.

The casing 2 is of essentially cylindrical shape having an axis XX', and consists of a bottom part 22 which extends generally crosswise relative to the above-mentioned axis.

This bottom part connects to and is joined in one piece with a side wall 20 centred on axis XX'.

The upper part of this wall referenced 21 is flanged 90° outwardly to form a peripheral flange.

The top of this casing is open, the corresponding opening being referenced 23.

The bottom part 22 has an extension 24 extending opposite to the opening 23 and this extension comprises an axial opening 240 with circular contour in which the holder 3, 4 of an electropyrotechnic initiator 5 is partly engaged. These elements, whose structure is known *per se*, will not be further described.

By means of this assembly, the initiator 5 extends inside the casing 2 and is centred on axis XX'.

The casing 2 materializes the combustion chamber C of the generator 1. A pyrotechnic charge 6 is placed in this chamber, the charge shown here being monolithic.

It is a solid block of propellant of cylindrical shape comprising an axial cylindrical channel 60.

This form of embodiment is well known and is used to house the initiator 5 of the charge 6 in the above-mentioned channel.

The above-described casing 2 is completed by a lid 7 which, in this embodiment, is in a single piece with the diffusion chamber D of the generator.

In the present case, the lid has a generally planar bottom part 72 perpendicular to axis XX', which is joined to a side wall with revolution surface 70 which itself is extended by a wide peripheral flange 71 flanged 90° outwardly. It will be noted that the diameter of the lid 7 is greater than the diameter of the casing 2 at the flange 21.

It is this peripheral flange 71 which ensures sealing of the combustion chamber C.

Any means known to persons skilled in the art can be used to secure the lid 7 to the casing 2. Friction welding may be considered for example.

The side wall with surface of revolution 70 is pierced with openings 700 which communicate with the outside and whose function is to allow evacuation of the gases received by the diffusion chamber and which are generated at the combustion chamber. These openings or nozzles also ensure guiding of the combustion of the pyrotechnic charge. In manner known *per se*, the surface of these openings is sized in relation to the desired performance of the generator.

In the embodiment shown here, these openings 700 are sealed by a metal rupture disk 8 arranged on the inner side of the wall 70.

In this specific embodiment, the diffusion chamber D therefore projects relative to the combustion chamber C at one of its ends, and has a cross-section which is substantially one half smaller than the cross-section of the combustion chamber.

Also, according to the invention, the diffusion chamber is devoid of filtering means for the gases originating from the combustion chamber.

To limit the percentage of solid particles which may escape from the diffusion chamber, use is preferably made of a pyrotechnic charge 6 which generates very few of such particles.

As can be ascertained, said generator contains relatively few constituent parts. Additionally, since its diffusion chamber D is much less voluminous than the combustion chamber, it is possible to place only the diffusion chamber and the airbag in a casing contained in the vehicle's dashboard, it being possible to place the combustion chamber outside this casing. Therefore the size of this casing can be reduced

In the embodiment shown figure 2, the structure is substantially equivalent to the structure shown figure 1. Therefore elements common to these two embodiments will not be further described. However, the casing 2 has a larger diameter that may even be greater than its longitudinal dimension.

Also, this casing contains a pyrotechnic charge 6' in the form of pellets and a packing material 9 whose function is to immobilize said pellets inasmuch as is possible.

The free upper end 200 of the side wall with surface of revolution 20 of the casing 2 forms a rim

against which a grid G is placed i.e. an openwork plate whose function is to allow the gases to pass whilst retaining pellet pieces which would tend to endeavour to escape from the combustion chamber C.

The lid 7 has a relatively similar structure to the lid shown figure 2 except that the flange 71 is flanged two consecutive times to form edges 73 and 74 which tightly surround the rim 200 of the casing 2.

Here too a metal rupture disk 8 (protective cap) is fixed opposite the openings 700 of the diffusion chamber and inside the latter.

Said rupture disk is designed to yield as soon as a required pressure is reached in the combustion chamber C.

To avoid the escaping of fragments from said rupture disk into the airbag, it can be envisaged to position this disk not opposite the openings 700 but in the transition area between chamber C and chamber D i.e. just at the inlet to chamber D.

The advantages of said generator lies in its reduced size and weight, in its simplified design and in its easy installing which is made possible both at the driving position of a vehicle and opposite a passenger seat.

CLAIMS

1. A pyrotechnic gas generator intended for motor-vehicle safety, which includes a combustion chamber (C) of cylindrical or approximately cylindrical shape, in which is contained an initiator (5) associated with at least one solid pyrotechnic charge (6, 6'), as well as a diffusion chamber (D) that communicates with the combustion chamber (C), and that receives the gases generated by the said charge (6, 6') and transfers them to the outside via at least one evacuation opening (700), characterised by the fact that the said diffusion chamber (D)

- extends parallel to the longitudinal axis (X, X') of the said combustion chamber (C), in the extension of one of its ends;
- is also of generally cylindrical or approximately cylindrical shape, but with a cross section that is less than that of the said combustion chamber (C);
- and is devoid of any means for filtering the gases that pass through it.

2. A generator according to claim 1, characterised by the fact that the said combustion chamber (C) and diffusion chamber (D) extend along the same axis (X, X').

3. A generator according to one of the previous claims, characterised by the fact that the cross section of the said diffusion chamber (D) is less than about half that of the said combustion chamber (C).

4. A generator according to one of the previous claims, characterised by the fact that the said

combustion chamber (C) is essentially formed by a box-shaped part (2) open at the top, and by a lid (7) for closure of this top, which is of one piece with the said diffusion chamber.

5. A generator according to one of the previous claims, characterised by the fact that it is provided with at least one protective cap (8) that gives way only when the predetermined gas pressure is reached in the combustion chamber (C).

6. A generator according to claim 5, characterised by the fact that the said protective cap (8) is placed in the transition zone between the two chambers (C, D).

7. A generator according to claim 5, characterised by the fact that the said protective cap (8) extends to the inside of the diffusion chamber (D) and closes off the said evacuation opening (700).

FIG. 1

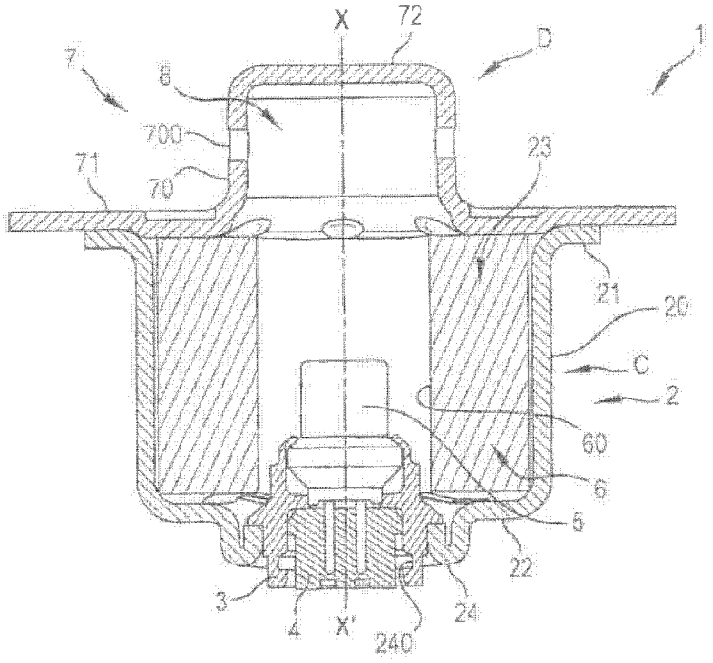
X
72
D
1
7
8
700
71
70
23
21
20
C
2
60
6
6
22
3
4
X'
240
24

FIG. 2

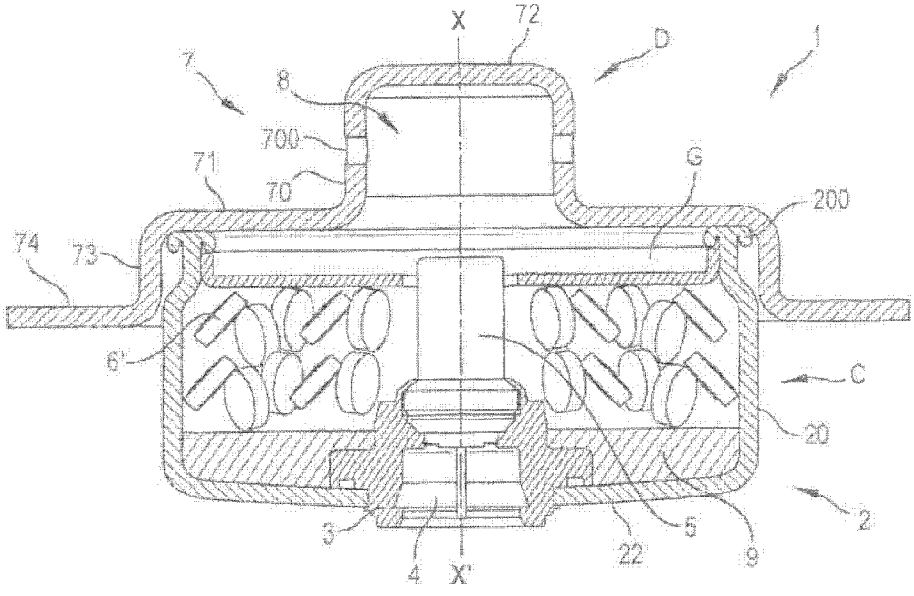
X
72
D
1
7
8
700
71
70
G
200
74
73
6'
C
20
2
3
4
X'
22
5
9

INTERNATIONAL SEARCH REPORT

International application No
PCT/EP2009/056928

A. CLASSIFICATION OF SUBJECT MATTER
INV. B60R21/26

According to International Patent Classification (IPC) or to both national classification and IPC

B. FIELDS SEARCHED

Minimum documentation searched (classification system followed by classification symbols)
B60R

Documentation searched other than minimum documentation to the extent that such documents are included in the fields searched

Electronic data base consulted during the international search (name of data base and, where practical, search terms used)
EPO-Internal

C. DOCUMENTS CONSIDERED TO BE RELEVANT

Category*	Citation of document, with indication, where appropriate, of the relevant passages	Relevant to claim No.
Y	US 6 126 197 A (MUIR MARTIN J [US] ET AL) 3 October 2000 (2000-10-03) the whole document	1
Y	US 5 762 368 A (FAIGLE ERNST M [US] ET AL) 9 June 1998 (1998-06-09) figures 1,3,4	1
A	WO 2005/035312 A (AUTOMOTIVE SYSTEMS LAB [US]) 21 April 2005 (2005-04-21) page 4, line 1 - page 9, line 2; claim 1	1
A	US 6 237 950 B1 (COOK FRED J [US] ET AL) 29 May 2001 (2001-05-29)	
A	US 6 068 291 A (LEBAUDY FRANCK [FR] ET AL) 30 May 2000 (2000-05-30)	

☐ Further documents are listed in the continuation of Box C.

☒ See patent family annex.

* Special categories of cited documents :

"A" document defining the general state of the art which is not considered to be of particular relevance

"E" earlier document but published on or after the international filing date

"L" document which may throw doubts on priority claim(s) or which is cited to establish the publication date of another citation or other special reason (as specified)

"O" document referring to an oral disclosure, use, exhibition or other means

"P" document published prior to the international filing date but later than the priority date claimed

"T" later document published after the international filing date or priority date and not in conflict with the application but cited to understand the principle or theory underlying the invention

"X" document of particular relevance; the claimed invention cannot be considered novel or cannot be considered to involve an inventive step when the document is taken alone

"Y" document of particular relevance; the claimed invention cannot be considered to involve an inventive step when the document is combined with one or more other such documents, such combination being obvious to a person skilled in the art.

"&" document member of the same patent family

Date of the actual completion of the international search	Date of mailing of the international search report
26 August 2009	03/09/2009

Name and mailing address of the ISA/	Authorized officer
European Patent Office, P.B. 5818 Patentlaan 2 NL – 2280 HV Rijswijk Tel. (+31–70) 340–2040, Fax: (+31–70) 340–3016	Scheuer, Jürgen

INTERNATIONAL SEARCH REPORT

Information on patent family members

International application No
PCT/EP2009/056928

Patent document cited in search report	Publication date	Patent family member(s)	Publication date
US 6126197 A	03-10-2000	US 6474684 B1	05-11-2002
US 5762368 A	09-06-1998	DE 19726275 A1	08-01-1998
WO 2005035312 A	21-04-2005	EP 1678006 A2	12-07-2006
		JP 2007508979 T	12-04-2007
		US 2005082804 A1	21-04-2005
US 6237950 B1	29-05-2001	NONE	
US 6068291 A	30-05-2000	DE 69807005 D1	12-09-2002
		DE 69807005 T2	03-04-2003
		EP 0879739 A1	25-11-1998
		ES 2180127 T3	01-02-2003
		FR 2763548 A1	27-11-1998
		JP 2912350 B2	28-06-1999
		JP 11048905 A	23-02-1999