(19) Europäisches Patentamt
European Patent Office
Office européen des brevets

(11) Publication number: **0 155 777**
A1

(12) EUROPEAN PATENT APPLICATION

(21) Application number: 85301265.6

(22) Date of filing: 25.02.85

(51) Int. Cl.⁴: B 65 D 25/32
B 65 D 25/28

(30) Priority: 29.02.84 DK 1227/84

(43) Date of publication of application:
25.09.85 Bulletin 85/39

(84) Designated Contracting States:
AT BE CH DE FR GB IT LI LU NL SE

(71) Applicant: Bock, Erik
Ejby Strandvej 3
DK-4070 Kr. Hyllinge(DK)

(72) Inventor: Bock, Erik
Ejby Strandvej 3
DK-4070 Kr. Hyllinge(DK)

(74) Representative: Woodin, Anthony John et al,
Fitzpatricks Kern House 61/62 Lincoln's Inn Fields
London WC2B 6EX(GB)

(54) Carrying handle and article having such a handle.

(57) A carrying handle comprising an elongate body portion (11) of resilient material and integral end portions (12) adapted to be rigidly attached to an article (e.g. a bucket-like container) to be carried, said body portion having integral hinges provided by thinner portions extending along folding lines in flat parts adjacents to said end portions, on which hinges the body portion can be swung, is characterised in that said body portion (11) has at least two folding lines (13, 14) at an angle to each other adjacent to each end portion (12) and so disposed that said end portions (12) can be rigidly attached to an aforesaid article with the folding lines (13, 14) adjacent to each end portion (12) extending at least substantially in a plane normal to a straight line through the end portions (12), whereby in use the body portion (11) can be swung between a position in which it is unfolded at said fold lines (13, 14) and another position in which it is folded at said fold lines (13, 14). Usually, said unfolded position will be upright and said folded position will be sideways relative to the article to be carried.

FIG. 5

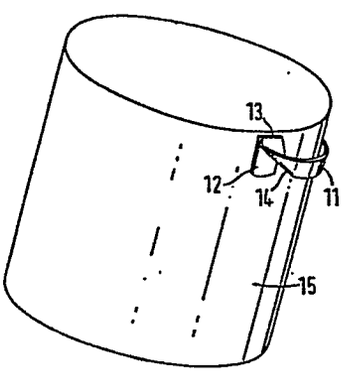

EP 0 155 777 A1

0155777

TITLE: CARRYING HANDLE AND ARTICLE HAVING SUCH A HANDLE

This invention is concerned with a carrying handle and an article, e.g. a container such as a bucket or pail, having a carrying handle.

It is common practice for a handle for a container to be pivotally mounted at each end to the container. For example, the ends of the handle may be rotatably located in holes in fittings on the container. The handle assembly thus consists of three parts, which are often fitted separately. Usually, the handle is free-swinging, its movement being limited by engagement with the container. In another arrangement, a handle of resilient plastics material is rigidly secured at its ends to a container and has, near its ends, integral hinges, formed by decreasing the thickness of the handle along folding lines extending in directions radially away from the central vertical axis of the container. Again, the handle is free-swinging between positions in which it contacts the container. Accordingly, in both arrangements, the handle is liable to present an upwards obstruction when filling or storing the container.

It is an object of the invention to provide a carrying handle which can be manufactured and fitted simply and cheaply and which can be releasably kept in a predetermined position clear of the top of the article to be carried.

The invention provides a carrying handle comprising an elongate body portion of resilient material and integral end portions adapted to be rigidly attached to an article to be carried, said body portion having integral hinges provided by thinner portions extending along folding lines in flat parts adjacent to said end portions, on which hinges the body portion can be swung, characterised in that said body portion has at least two folding

lines at an angle to each other adjacent to each end portion and so disposed that said end portions can be rigidly attached to an aforesaid article with the folding lines adjacent to each end portion extending at least substantially in a plane normal to a straight line through the end portions, whereby in use the body portion can be swung between a position in which it is unfolded at said fold lines and another position in which it is folded at said fold lines.

Preferably, of said two folding lines adjacent to each end portion, one line extends in a direction normal to the longitudinal axis of the body portion and the other line is on the opposite side of the normally-extending line to the adjacent end portion.

The handle, which preferably comprises a flat strip of plastics material, thus provides a part to be gripped, hinges and mounting parts which can all be made in one piece. It is conveniently made by injection moulding or extruding plastics material.

The invention further provides an article (e.g. a container such as a bucket or pail) having a carrying handle as hereinbefore defined with said end portions rigidly attached at opposed positions outside the article. Preferably, the handle is arranged to extend upwardly from the article in said unfolded position and extend sideways from the container in said folded position.

The following is a description, by way of example only, of one embodiment of the invention, reference being made to the accompanying drawings, in which

Fig. 1 is a plan view of a carrying handle in accordance with the invention in a flat state,

Fig. 2 is a side view of the handle,

Fig. 3 is an isometric view on a larger scale

of part of the handle,

Fig. 4 is an isometric view of the handle fitted to a container and in upright position, and

Fig. 5 is an isometric view of the handle fitted to a container and in sideways position.

The carrying handle 10 is in the form of a flat strip of flexible resilient plastics material (e.g. polypropylene) providing an elongate body portion 11 and end portions 12. Adjacent to each end portion 12 the body portion 11 is provided with two hinges constituted by grooved parts of the strip of thinner cross-section than the remainder of the strip and extending along folding lines 13 and 14. As shown in Figs. 1, 2 and 3, each hinge has opposed grooves on opposite faces of the strip. However, each hinge may have only a single groove on one face of the strip. The folding lines 13 extend normally to the longitudinal axis of the body portion 11 while the folding lines 14 extend at an angle to that axis and on the opposite sides of the lines 13 from the end portions 12.

In use (see Figs. 4 and 5), the handle is bent into an open loop and secured to an open-topped cylindrical container 15 by immovably anchoring the end portions 12 (e.g. by welding or cementing) to diametrically opposite positions on the outside of the container adjacent the top thereof so that the folding lines 13, 14 adjacent to each end portion lie substantially in a plane normal to a radius of the container. Fig. 4 shows the handle in an upright, unfolded position for use in carrying the container. When the body portion 11 of the handle is pushed downwards and sideways, outwards folding occurs about the folding lines 13 and opposite folding occurs about the folding lines 14 and the handle assumes a position

at the side of and below the top of the container as shown in Fig. 5, being retained in this position because of the resilient nature of the strip. If the handle is then lifted away from the container with a moderate degree of force sufficient to overcome the resilient constraint, it resumes the upright position of Fig. 4.

The carrying handle hereinbefore described with reference to the drawings has the following advantages over previously known handles. It is cheap to manufacture, as it may be injection moulded or extruded in a flat state. It is simple to fit to a container by automatic means, as the part to be gripped, the hinges and the mounting parts can all be made in one piece. It may be designed so that it remains resiliently held in two positions, e.g. (1) upright and (2) lying along the side of a container so that it will cause no obstruction on a container filling line or in a palletiser. A particularly useful feature, compared with conventional handles, is that the risk of accidental displacement from a sideways position when the container is moved along an automatic filling line is avoided or minimised.

CLAIMS:

1. A carrying handle comprising an elongate body portion (11) of resilient material and integral end portions (12) adapted to be rigidly attached to an article to be carried, said body portion having integral hinges provided by thinner portions extending along folding lines in flat parts adjacent to said end portions, on which hinges the body portion can be swung, characterised in that said body portion (11) has at least two folding lines (13, 14) at an angle to each other adjacent to each end portion (12) and so disposed that said end portions (12) can be rigidly attached to an aforesaid article with the folding lines (13, 14) adjacent to each end portion (12) extending at least substantially in a plane normal to a straight line through the end portions (12), whereby in use the body portion (11) can be swung between a position in which it is unfolded at said fold lines (13, 14) and another position in which it is folded at said fold lines (13, 14).

2. A carrying handle according to claim 1 wherein, of said two folding lines (13, 14) adjacent to each end portion (12), one line (13) extends in a direction normal to the longitudinal axis of the body portion and the other line (14) is on the opposite side of the normally-extending line (13) to the adjacent end portion (12).

3. A carrying handle according to claim 1 or claim 2 wherein a flat strip of plastics material provides said body portion (11) and end portions (12).

4. An article having a carrying handle (10) according to any preceding claim with said end portions (12) rigidly attached at opposed positions outside the article (15).

5. An article according to claim 4 wherein the handle (10) is arranged to extend upwardly from the

article (15) in said unfolded position and to extend sideways of the article (15) in said folded position.

6. An article according to claim 5 in the form of a container (15).

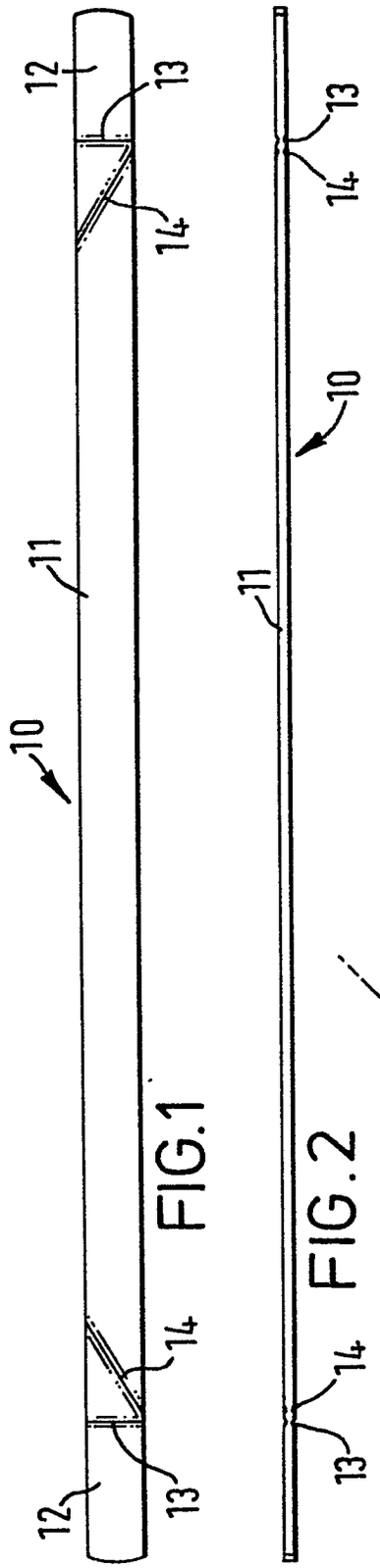

FIG.1

FIG.2

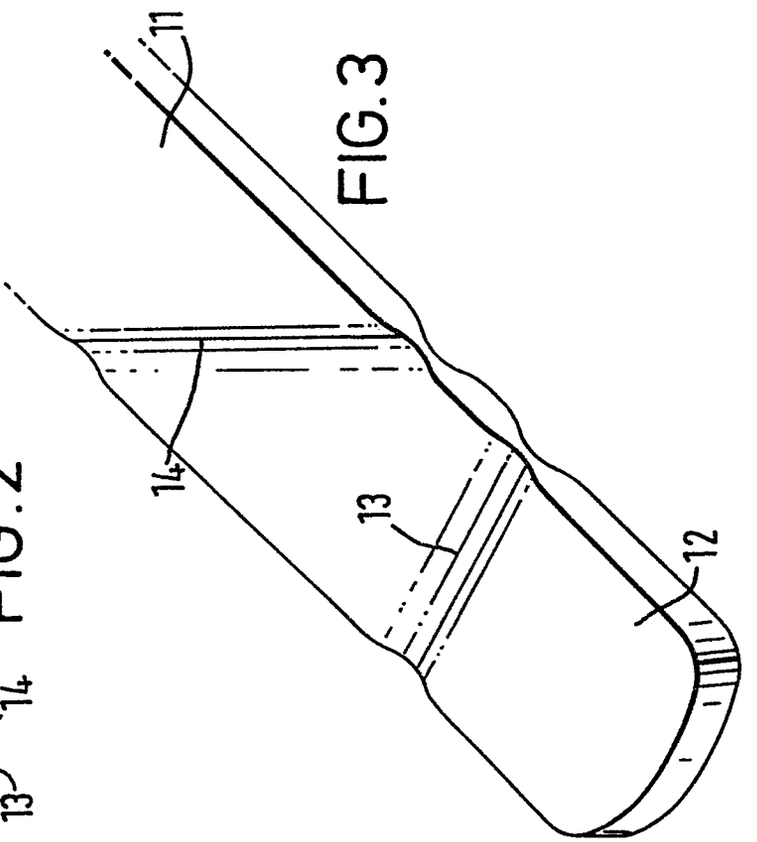

FIG.3

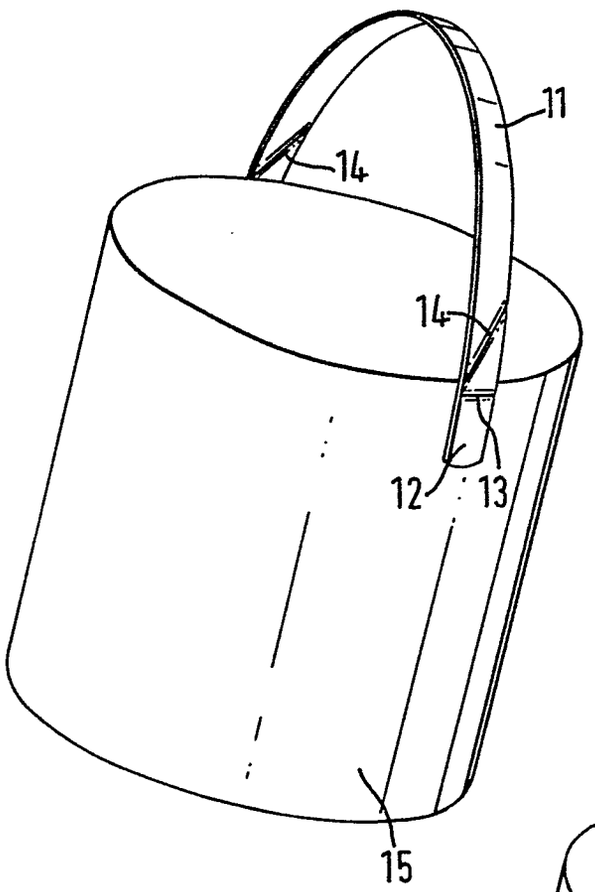

FIG. 4

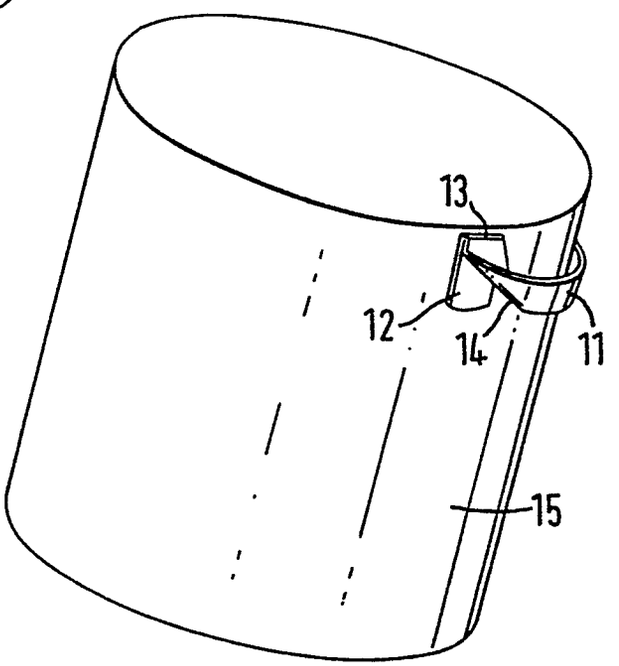

FIG. 5

0155777

European Patent Office

Application number

EP 85 30 1265

EUROPEAN SEARCH REPORT

DOCUMENTS CONSIDERED TO BE RELEVANT

Category	Citation of document with indication, where appropriate, of relevant passages	Relevant to claim	CLASSIFICATION OF THE APPLICATION (Int. Cl 4)
X	NO-C- 92 732 (NORMAN) * Page 1, right-hand column, lines 16-20; page 2, left-hand column, line 50 - page 2, right-hand column, line 13; figures 3-5 *	1-3,5, 6	B 65 D 25/32 B 65 D 25/28
A		4	

X	DE-B-1 260 364 (CONTINENTAL CAN CO.) * Column 3, lines 61-68; column 4, line 48 - column 5, line 4; figures 1-5 *	1,2,5, 6	
Y		3,4	TECHNICAL FIELDS SEARCHED (Int. Cl.4)

Y	FR-A-2 509 692 (POT S.A.) * Figures 4-6 *	3,4	B 65 D A 47 J
A		1	

A	GB-A-2 078 500 (McCLEAN-WRIGHT) * Page 2, lines 15-61; figures 1-3 *	1,2,5, 6	
	--- -/-		

The present search report has been drawn up for all claims

Place of search	Date of completion of the search	Examiner
THE HAGUE	23-05-1985	BERRINGTON N.M.

CATEGORY OF CITED DOCUMENTS

X : particularly relevant if taken alone
Y : particularly relevant if combined with another document of the same category
A : technological background
O : non-written disclosure
P : intermediate document

T : theory or principle underlying the invention
E : earlier patent document, but published on, or after the filing date
D : document cited in the application
L : document cited for other reasons

& : member of the same patent family, corresponding document

EPO Form 1503 03 82

European Patent Office

EUROPEAN SEARCH REPORT

0155777
Application number

EP 85 30 1265

DOCUMENTS CONSIDERED TO BE RELEVANT

Category	Citation of document with indication, where appropriate, of relevant passages	Relevant to claim	CLASSIFICATION OF THE APPLICATION (Int Cl 4)
A	US-A-3 623 633 (KINN) * Figures 1-3,5 * -----	1,3,4, 6	
			TECHNICAL FIELDS SEARCHED (Int Cl 4)

The present search report has been drawn up for all claims

Place of search	Date of completion of the search	Examiner
THE HAGUE	23-05-1985	BERRINGTON N.M.

CATEGORY OF CITED DOCUMENTS

X : particularly relevant if taken alone
Y : particularly relevant if combined with another document of the same category
A : technological background
O : non-written disclosure
P : intermediate document

T : theory or principle underlying the invention
E : earlier patent document, but published on, or after the filing date
D : document cited in the application
L : document cited for other reasons

& : member of the same patent family, corresponding document

EPO Form 1503 03 82