United States Patent

[11] 3,599,389

[72] Inventor Curtis Arnold Hartman
Elmira, N.Y.

[21] Appl. No. 831,578
[22] Filed June 9, 1969
[45] Patented Aug. 17, 1971
[73] Assignee Dart Industries, Inc.
Los Angeles, Calif.

[54] TUBE-FILLING MACHINE WITH TUBE-POSITIONING MECHANISM
3 Claims, 5 Drawing Figs.

[52] U.S. Cl. 53/51, 53/266, 250/71
[51] Int. Cl. B65b 57/00
[50] Field of Search ..... 53/14, 51, 266, 371, 373; 198/33 R; 250/71

[56] References Cited

UNITED STATES PATENTS

1,824,432	9/1931	Hendry	53/51 X
2,929,931	3/1960	Richter et al.	250/71
3,059,112	10/1962	Rogal	250/71
3,105,908	10/1963	Burkhardt et al.	250/71 X
3,492,478	1/1970	Smith	250/71

Primary Examiner—Theron E. Condon
Assistant Examiner—Robert L. Spruill
Attorneys—Leigh B. Taylor, Paul R. Wylie and Harold R. Beck

ABSTRACT: A process and apparatus for positioning a tube on a filling machine by printing a fluorescent area on the tube. The tube is then irradiated with ultraviolet light from an ultraviolet light source causing the fluorescent area to emit visible light. The tube is then rotated until the flowing fluorescent area is detected by a visible light detector and rotation is then stopped.

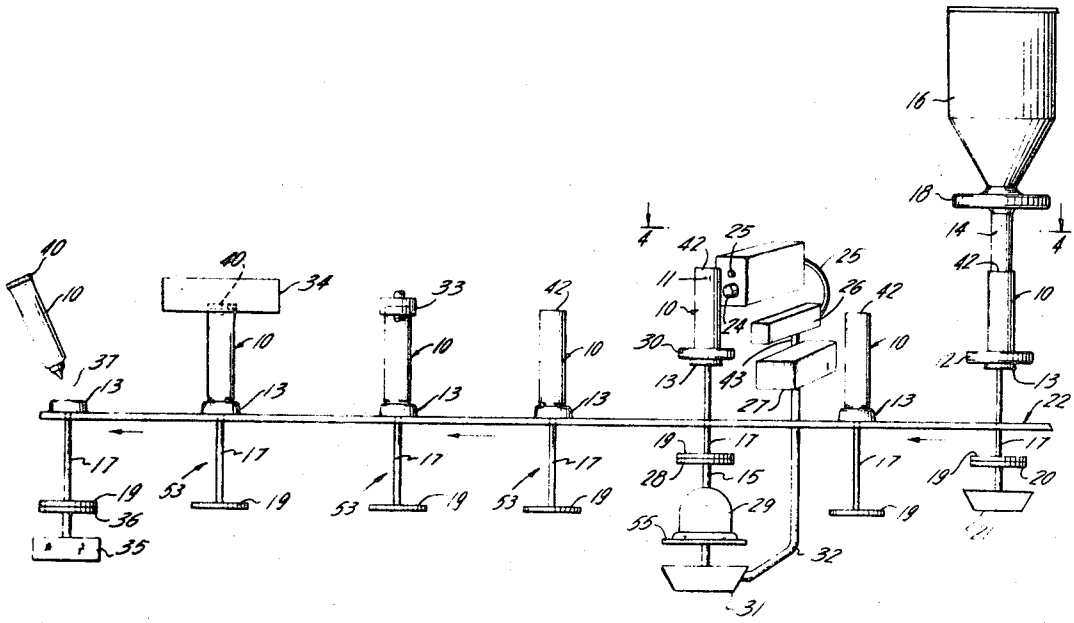

FIG. 1

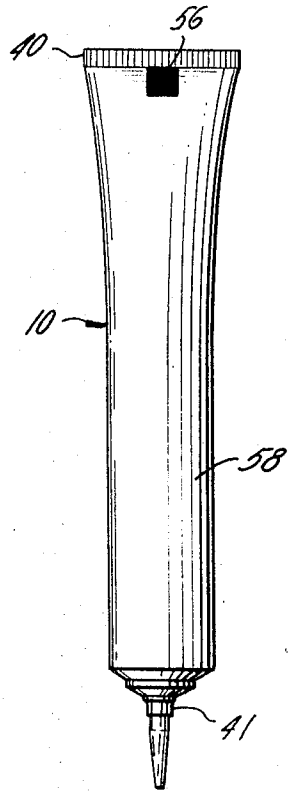

PRIOR ART

FIG. 2

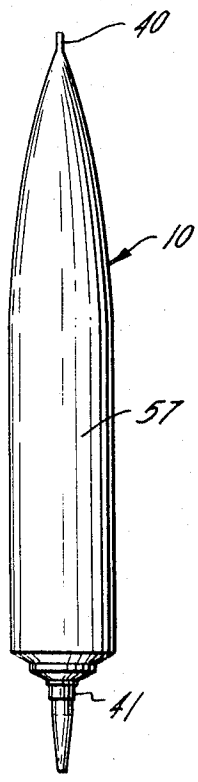

PRIOR ART

INVENTOR.
CURTIS A. HARTMAN

BY Leigh B. Taylor

ATTORNEY

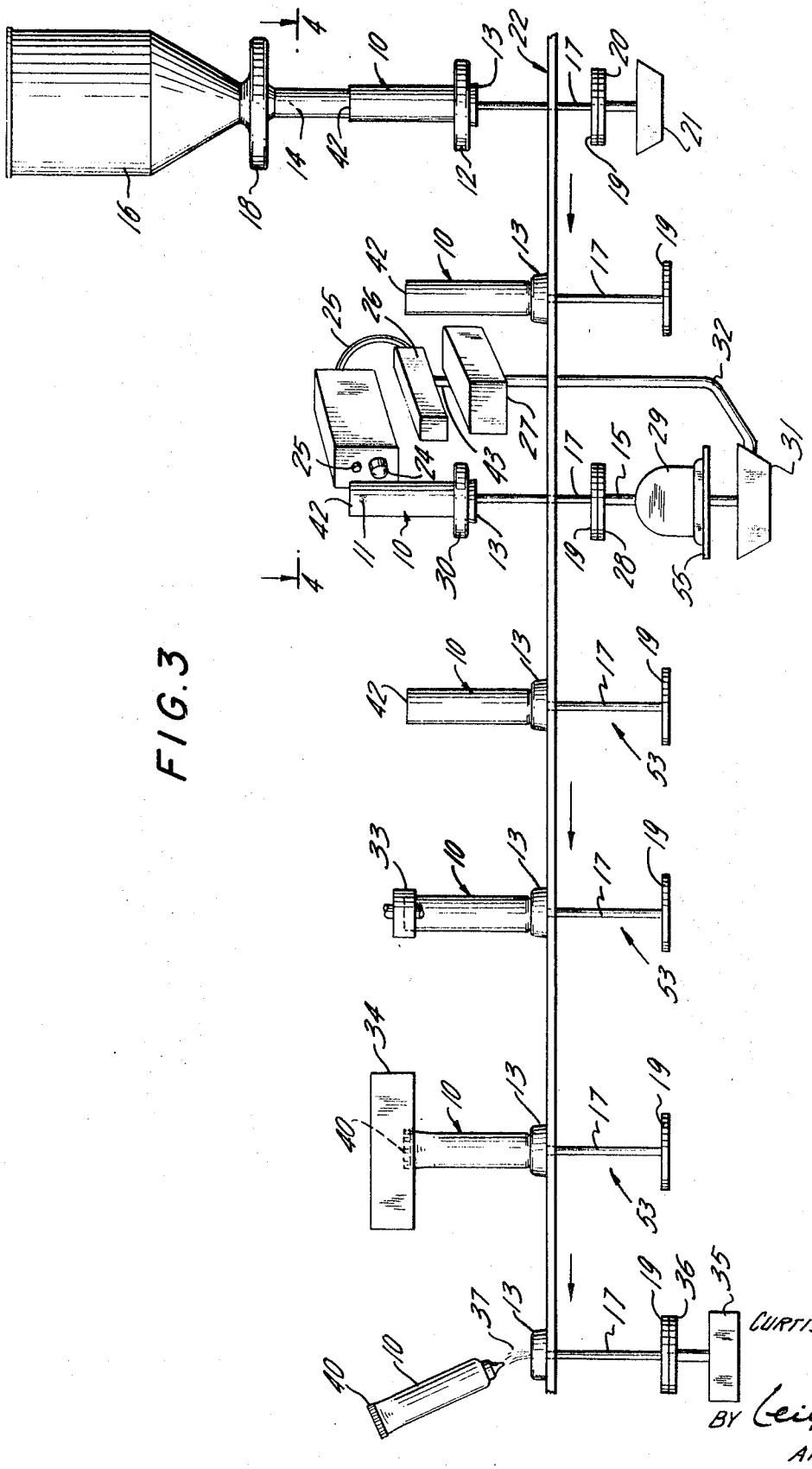

FIG. 3

INVENTOR.
CURTIS A. HARTMAN

BY Leigh B. Hayes

ATTORNEY

FIG. 4

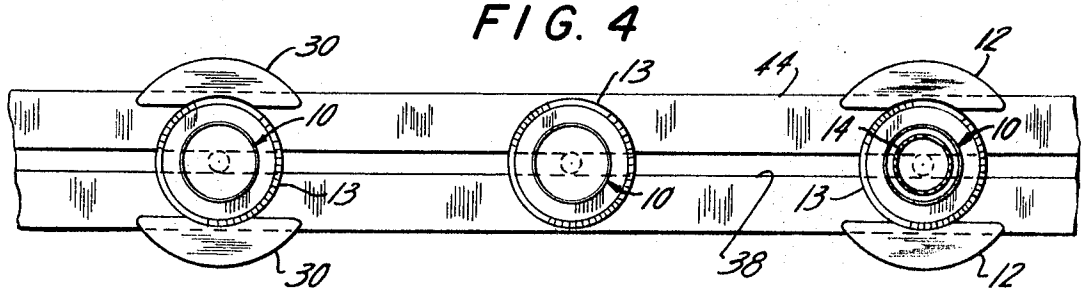

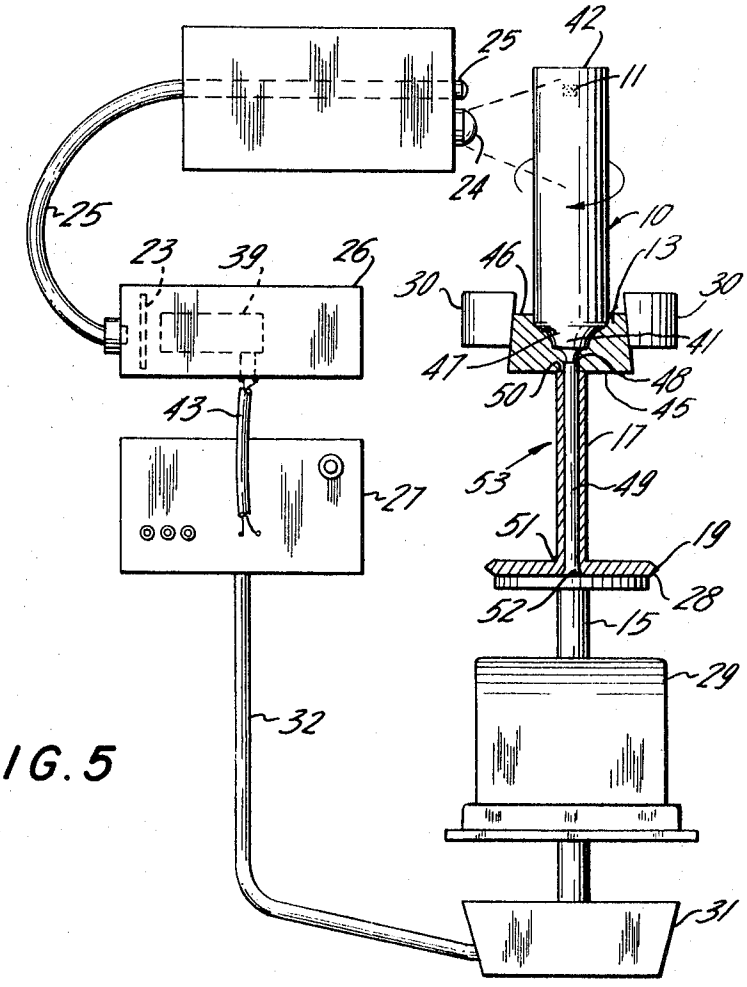

FIG. 5

INVENTOR.
CURTIS A. HARTMAN

BY

Leigh B. Taylor

ATTORNEY

TUBE-FILLING MACHINE WITH TUBE-POSITIONING MECHANISM

BACKGROUND OF THE INVENTION

1. Field of Invention

This invention concerns a process and mechanism for positioning a printed tube prior to sealing. The positioning is necessary so the printed matter will appear in the most readable position after the tube is sealed.

2. Description of the Prior Art

As seen in the prior art FIGS. **1** and **2**, squeeze tubes such as those used for tooth paste, cosmetics, hair conditioners and adhesives, have a relatively flat seal **40** at one end. The result of the flat seal is that the tube changes from a circular cross section at the end near tip **41** to a substantially linear cross section at the end having the flat seal. In order to be legible, printing on the tube must appear on tube face **58** as shown in FIG. **1**. When the sealed tube is viewed from edge **57**, as seen in FIG. **2** it has a shape tapering from a circular cross section near tip **41** of the tube to a point at flat seal **40**. Printing which appears on edge **47** of the tube is difficult to read. It is therefore necessary to orient the tube before sealing so that the printing will appear on face **58** of the tube. In the prior art it has been customary to print a large colored spotter bar **56** on the tube which can be easily detected by a conventional photo electric cell. In the prior art orientation of the tube was done by a device which was usually installed on the inlet of the filling machine. The device consisted of a light source to direct a beam of light onto the outer circumference of the tube adjacent the open end of the tube. The light reflected back from the surface of the tube was detected by the photo cell. The signal from the photo cell was amplified to operate a relay which controlled a clutch brake assembly which in turn controlled the rotation of the tube. When a tube entered the positioning station the tube was rotated until the spotter bar intercepted the reflected light. The spotter bar absorbed most of the incident light which greatly reduced the reflected light falling upon the photo cell detector. The resulting reduced signal was used to control the clutch brake assembly which stopped the tube in the proper position for sealing.

In most cases the spotter bar consisted of a dark mark on a light field. In some instances this was reversed to produce a dark background and a light spotter bar. It was essential that a large amount of contrast be maintained between the spotter bar and the surface of the tube. When metal tubes were sealed the black spotter bar was hidden because the section of the metal tube having the spotter bar was rolled into a flat seal characteristic of metal squeeze tubes. Plastic tubes are usually heat sealed and are not folded and as a result the spotter bar appears on the tube. In our modern age of packaging any visible markings which do not blend harmoniously into the design are thought to detract from the asthetic qualities of the package. It is therefore very important that the visible spotter bar be eliminated from the surface of the plastic squeeze tube.

BRIEF DESCRIPTION OF THE INVENTION

This invention relates to a process and apparatus for positioning a tube. A normally transparent fluorescent area is placed on the tube preferably by printing. The tube is then rotated about its central axis while it is irradiated with ultraviolet light. The ultraviolet light causes the fluorescent area to glow. The glowing fluorescent area is detected when the tube has rotated to a predetermined position and the rotation is then stopped by a braking means such as a clutch brake. The invention mechanism includes an ultraviolet light which directs a beam upon the tube to be positioned which causes visible light to be emitted from a normally transparent fluorescent area on the tube. A visible light detector which is directed at the tube, a motor for rotating the tube and a braking means such as a clutch brake or motor-stepping device for stopping the rotation of the tube and a relay between the visible light detector and the brake for engaging the brake when the fluorescent area on the tube is in a position where the visible light emitted from the fluorescent area can be detected.

An object of this invention is to provide a novel process for positioning tubes on a filling machine without the use of normally visible spotter bars.

Another object of this invention is to position a tube on a filling machine using a fluorescent spotter bar.

Another object of this invention is to provide a novel process for positioning a tube.

Another object of this invention is to provide a novel mechanism for positioning a tube.

Other objects of this invention will become apparent throughout the following text and examples.

BRIEF DESCRIPTION OF THE DRAWINGS

FIG. **1** is a front view of a prior art tube;

FIG. **2** is a side view of a prior art tube;

FIG. **3** is an elevational view of a tube filling line;

FIG. **4** is a top view of the filling and positioning mechanisms as seen on line **4–4** of FIG. **3**;

FIG. **5** is a plan view of the positioning mechanism.

PREFERRED EMBODIMENT

In accordance with this invention a tube is positioned for sealing so the sealed tube will display printing on the tube in the most readable position. At least one normally transparent fluorescent area is placed on the tube. The tube is then rotated about its central axis and the fluorescent area is irradiated by ultraviolet light. The glowing area is detected when it reaches a predetermined location and the rotation of the tube is then stopped. Any means for placing a fluorescent area on a tube may be used. Printing with a solution which dries to a clear film is, however, the preferred method. The printing solution may comprise any fluorescent material in a suitable vehicle, and in the preferred embodiment comprises zinc silicate in a clear varnish vehicle.

Referring now to the drawings, as best seen in FIGS. **3**, **4** and **5** plastic tube **10** is inserted with tube tip **41** down into tube holder **13**. Tube holder **13** rests on conveyor **22** which has two separated equal speed parallel conveyor belts **44** forming slit **38** between them. Slit **38** is wide enough to pass hollow lift rod **17** which is attached by its upper end to the center of the base of tube holder **13**. Parallel conveyor belts **44** are close enough to frictionally engage the base of tube holder **13** which rests upon the conveyor.

The tube holder has a base **45** a top end **46** and an opening **47** to accept tube tip **41**. Tube holder **13** also has a centrally located hole **48** from base **45** to opening **47**.

Hollow lift rod **17** has a centrally located hole **49** passing from upper end **50** to lower end **51**. Lift rod **17** is attached by its upper end **50** to the center of base **45** of tube holder **13** so central hole **49** at the upper end **50** of lift rod **17** meets hole **48** in the base **45** of tube holder **13**. Lower end **51** of lift rod **17** is secured to the center of upper clutch plate **19** so the hole **52** in clutch plate **19** meets central hole **49** at lower end **51** of lift rod **17**. Conveyor **22** frictionally moves tube carrier **53** which is the combination of tube holder **13**, lift rod **17** and upper clutch plate **19**, until clutch plate **19** is positioned directly above lower lift plate **20** on lift **21** which is preferably solenoid actuated. When upper clutch plate **19** reaches a position directly above lift plate **20**, solenoid **21** is actuated and tube carrier **53** is raised so that base **45** of tube holder **13** is no longer in frictional contact with conveyor **22** and so that open end **42** of plastic tube **10** is placed over filler head **14**. Tube carrier **53** is stabilized by guides **12**. Material to be loaded into plastic tube **10** is stored in reservoir **16** and is metered into tube **10** through fill meter **18**. When the proper amount of material has been metered through meter **18**, lift **21** is lowered and base **45** of tube holder **13** again frictionally engages conveyor **22**. Conveyor **22** then transports tube carrier **53** and plastic tube **10** to a tube-positioning mechanism.

When upper clutch plate **19** is positioned directly above lower clutch plate **28** of the tube-positioning mechanism, lift **31** is actuated raising lift plate **55** which holds motor **29**. Motor shaft **15** rotates lower clutch plate **28** which rotates tube carrier **53** through upper clutch plate **19**. Tube carrier **53** is stabilized in the raised position by bearing plates **30**. Ultraviolet light source **24** directs a beam of ultraviolet light upon tube **10** which causes visible light to be emitted from fluorescent area **11** which was printed on tube **10** prior to loading tube **10** into tube carrier **53**. Fiber optic **25** is directed at the band portion of the surface of plastic tube **10** which contains fluorescent area **11**. When plastic tube **10** has rotated so that fiber optic **25** can pick up the visible light emitted from fluorescent area **11** the light is transmitted through fiber optic **25** to filter **23** which passes only wave lengths emitted by fluorescent area **11**. Photomultiplier tube **39** utilizes the light which passes through filter **23** to obtain and amplify an electron emission. The electric signal is then transmitted through signal cable **43** to relay and power supply **27**. Lift **31**, which is preferably a solenoid, is lowered by the signal which is relayed from power supply and relay **27** to lift **31** through relay cable **32**. When the lift is lowered, base **45** frictionally engages conveyor **22** which stops the rotation of the tube and tube carrier in the proper position. Other means for stopping rotation could be used such as stopping a stepping motor or employing other known forms of braking mechanisms. The conveyor then transports the tube and tube carrier in the proper position to heat sealer **33** which seals open end **42** of tube **10**. The conveyor then transports the tube and tube carrier from heat sealer **33** to cooler **34** which cools the newly formed seal **40**.

Conveyor **22** then transports tube carrier **53** and tube **10** to air supply **35**. When upper clutch plate **19** is directly above plate **36** an air stream **37** passes from air supply **35** through hole **52** in clutch plate **19** up through central hole **49** in lift rod **17** to hole **48** in base **45** of tube holder **13**. The air then passes into open end **42** in tube holder **13** and tube **10** is blown out of open end **42**.

What I claim is:

1. A filling machine for tubes comprising:
- a carrier for said tube,
- a conveyor for transporting said carrier,
- means for introducing said tube into said carrier proximate said conveyor,
- means for filling said tube proximate said conveyor and downstream from said introducing means,
- a mechanism for positioning said tube proximate said conveyor and downstream from said filling means comprising:
  - an ultraviolet light which directs a beam upon said tube which causes visible light to be emitted from a normally transparent fluorescent area on said tube,
  - a visible light detector directed at said tube,
  - a means for rotating said tube,
  - a braking means for stopping the rotation of said tube,
  - a relay between said visible light detector and said braking means for engaging said braking means when said fluorescent area on said tube is in a position where visible light emitted from said fluorescent area can be detected by said visible light detector,
- a means for sealing the open end of said tube proximate said conveyor and downstream from said positioning mechanism and,
- a means for removing the tube from the tube holder, proximate said conveyor and downstream from said sealing means.

2. A filling machine for plastic tubes comprising:
- a. a tube carrier having:
  - a tube holder having a base end, a top end having an opening to accept the tip of said tube, a centrally located hole from said base end to said opening;
  - a lift rod having a centrally located hole, an upper and lower end attached by the upper end to the center of said base end of said tube holder so the hole at the upper end of the lift rod meets the hole in the base end of the tube holder and
  - an upper clutch plate having a hole through the center, said upper clutch plate being secured to the lower end of said lift rod so the hole in said clutch plate meets the hole at the lower end of said lift rod;
- b. a conveyor for transporting said tube carrier through said filling machine said conveyor having equal speed parallel conveyor belts separated by a distance sufficient to freely pass the lift rod of said tube carrier and close enough to frictionally engage the base of said tube holder,
- c. means for loading the tube into said tube carrier proximate said conveyor,
- d. a filling mechanism proximate said conveyor and downstream from said loading means having:
  - a reservoir for holding material for filling said tubes,
  - a fill meter connected to said reservoir for controlling the quantity of material entering said tube,
  - a filler head connected to said fill meter for passing material from said fill meter into said tube,
  - a means for lifting said tube onto said filler head and,
  - means for lowering said tube when filling is completed;
- e. a positioning mechanism proximate said conveyor and downstream from said filling mechanism comprising:
  - an ultraviolet light which directs a beam upon said tube which causes visible light to be emitted from a fluorescent area on said tube,
  - a visible light detector directed at a band portion of the surface area of said tube, said band containing said fluorescent area,
  - a lower clutch plate,
  - a motor having a drive shaft centrally secured to said lower clutch plate,
  - a means for engaging said upper and lower clutch plates for transmitting the rotational energy of said motor to said tube,
  - a relay between said detecting means and said engaging means for activating said engaging means when the tube reaches the proper position,
  - a braking means for stopping the rotation of said tube and
  - a relay between said visible light detector and said braking means for engaging said braking means when said area on said tube is in a position where the visible light emitted from the fluorescent area can be detected by said visible light detector,
- f. a sealing means for sealing the open end of the tube proximate said conveyor and downstream from said positioning mechanism and,
- g. a means for removing the tube from the tube holder proximate said conveyor and downstream from said positioning mechanism.

3. A filling machine for tubes comprising in combination:
- means for filling said tube,
- a mechanism for positioning a tube comprising:
  - an ultraviolet light which directs a beam upon said tube which causes visible light to be emitted from a normally transparent fluorescent area on said tube,
  - a visible light detector directed at said tube,
  - a means for rotating said tube,
  - a braking means for stopping the rotation of said tube and,
  - a relay between said visible light detector and said braking means for engaging said braking means when said fluorescent area on said tube is in a position where the visible light emitted from the fluorescent area can be detected by said visible light detector, and
- means for sealing the open end of said tube after said tube is filled.