May 27, 1952 J. W. WRAITH 2,598,479

PAINT BUCKET HOLDING DEVICE

Filed Dec. 6, 1949

FIG. 1.

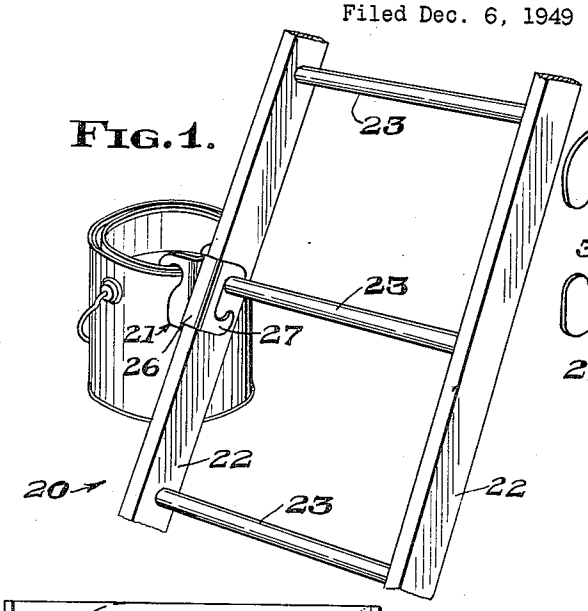

FIG. 2.

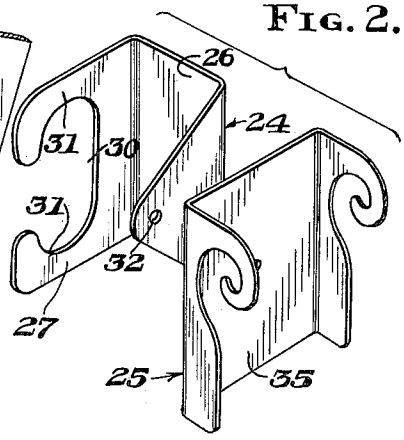

FIG. 3.

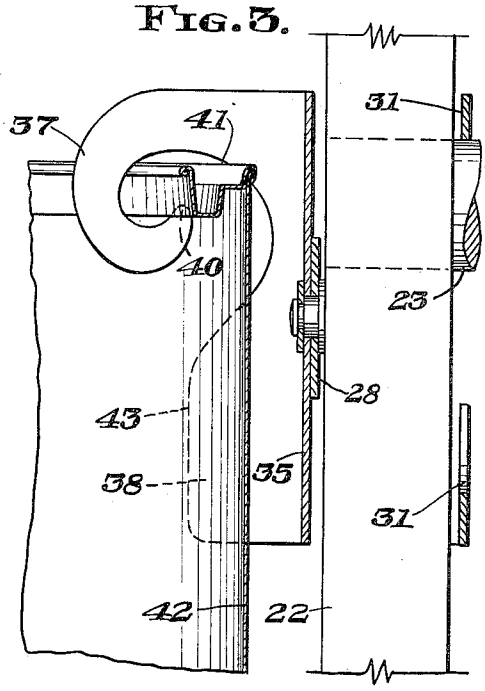

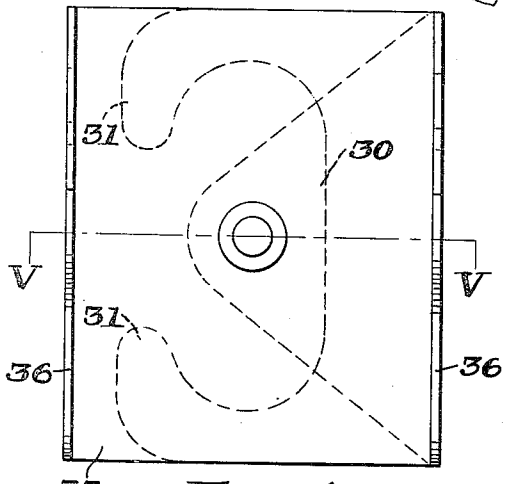

FIG. 4.

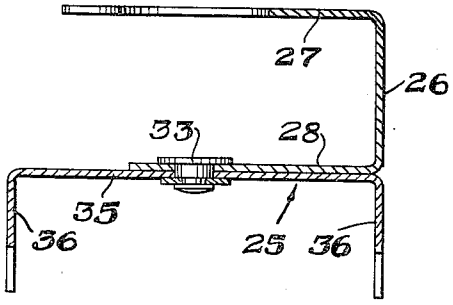

FIG. 5.

INVENTOR.
James William Wraith
BY
Herschel C. Omohundro
Attorneys

Patented May 27, 1952

2,598,479

UNITED STATES PATENT OFFICE

2,598,479

PAINT BUCKET HOLDING DEVICE

James W. Wraith, Columbus, Ohio

Application December 6, 1949, Serial No. 131,354

9 Claims. (Cl. 248—211)

1

This invention relates generally to equipment used by interior and exterior decorators and is more particularly directed to a device for holding paint buckets on ladders.

An object of the invention is to provide a paint bucket holding device which may be removably secured to a ladder to support a paint bucket thereon with substantially complete access to the open end of the bucket being provided, the device being interchangeable in that it may be used on either side of a straight ladder.

Another object of the invention is to provide a paint bucket holding device which may be applied to one of the side rails of the ladder and supported thereon by one of the ladder rungs, the device also having hook means for engaging the flange around the open end of a paint bucket to support the latter.

A still further object of the invention is to provide a paint bucket holder having a body which will partially surround the the side rail of a ladder and engage and be supported by one of the ladder rungs, the device having hook-shaped elements disposed in spaced relation and projecting outwardly from the ladder side rail to receive and support the paint bucket, the hooks extending into the open end of the bucket and engaging the underside of an inturned flange provided around the open end of the bucket.

Another object of the invention is to provide a paint bucket holding device formed of two sections, one of the sections being channel-shaped and having spaced opposed hooks formed in one flange thereof, the other flange having an opening formed therein for the reception of a pivot which unites the other section of the device to the first. The second section of the device is also of channel formation, the back, or, body section of the channel being joined with the first section by the pivot so that when the first section is disposed around the side rail of a ladder, the second section will be disposed on the outer side of the ladder side rail, the flanges of the second section having hook-like elements formed thereon, these hook-like elements projecting downwardly and rearwardly toward the body portion of the section so that the ends of these hooks may be engaged under the flange around the open end of the bucket. Due to the pivotal mounting between the sections and the opposed hooks on the first section, the device is made adaptable for use on either side of the ladder.

Further objects and advantages of the present invention will be apparent from the following description, reference being had to the accompanying drawing wherein a preferred form of embodiment of the invention is clearly shown.

2

In the drawing:

Fig. 1 is a perspective view of a portion of a ladder with a paint bucket holding device formed in accordance with the present invention applied thereto and supporting a paint bucket;

Fig. 2 is a group perspective view showing the body portions of the paint bucket holding device in separated relationship;

Fig. 3 is a vertical sectional view taken through the paint bucket holding device showing the same in place on a ladder with a paint bucket in position to be supported thereon,

Fig. 4 is a side elevational view of the device shown in Fig. 3, the bucket engaging portion being shown in elevation and the ladder engaging portion being shown in dotted lines, and,

Fig. 5 is a detail horizontal sectional view of the device on the plane indicated by the line V—V of Fig. 4.

Referring more particularly to the drawing, the numeral 20 designates a ladder; the device forming the subject matter of the present invention is indicated generally by the numeral 21 and is designed particularly for use on straight ladders, or, ladders of the generally termed extension type. The ladder 20 includes side rails 22 and rungs 23, which extend between the side rails and are suitably secured thereto.

The paint bucket holding device 21 includes a pair of body members or sections 24 and 25, each of which is stamped from sheet metal of suitable gauge and bent into the desired form. The section 24 is of generally channel formation having a back, or, body portion 26 and flange portions 27 and 28. These flange portions are spaced so that the device may be positioned on the side rail of a ladder with one of the flanges on one side thereof and the other flange at the other side. Flange 27 has a slot 30 formed therein, this slot being substantially C-shape, with the open side of the C-shape directed away from the body portion 26; this slot thus provides two rounded end portions 31 on the flange 27, these rounded end portions functioning as hooks for engagement with a rung 23 of the ladder 20 when the body portion 24 is applied thereto, as shown in Fig. 1. The hooks 31 are opposed so that the device may be applied to either side rail of the ladder, one hook being used when the device is applied on one side of the ladder and the other hook being used when the device is applied on the opposite side of the ladder.

Flange 28 has an opening 32 formed therein,

this opening being provided for the reception of a shoulder rivet generally indicated by the numeral **33**. When the bucket holding device is applied to the side rail of a ladder, the flange **28** is disposed on the outer side of the side rail, while the body portion **26** engages the edge of a side rail at the front of the ladder which is occupied by the workman. The rivet **33** pivotally connects the body section **24** to the second body section **25**, this body section also being of channel-shape and having a back portion **35** and flange portions **36**, these flange portions projecting from the longitudinal side edges of the body portion **35**. Before these flanges are bent outward from the body **35**, they are stamped to provide hook elements **37** and bucket engaging strips **38**.

As shown, more particularly in Figures 2 and 3, the hook elements **37** curve downwardly and rearwardly toward the body portion **35** and terminate in upwardly directed extremities **40**. The extremities **40** are spaced from the remaining portion of the flange so that the upper edge **41** of a paint bucket **42** may be inserted between the hook and the flange proper. In the form of the invention illustrated, the hooks **37** are continuously curved. It should be readily understood that these hooks may be given a different configuration as long as they are directed downwardly and rearwardly. The hooks terminate substantially in vertical registration with the outer edges **43** of the bucket engaging strips **38**.

When the device is applied to the bucket, it is held over the bucket with the edges **43** substantially horizontal, the hooks are then moved under the flange on the bucket and the device turned to swing the edges **43** to a substantially vertical position. This movement places the ends of the hooks beneath the flange so that the weight of the bucket will be supported on the hooks. The edges **43** engage the side of the bucket and prevent movement of the bucket toward the ladder. In most instances, the flange on the bucket has a groove adjacent the bucket wall in which the hooks are disposed when the device is in use. The bucket is thus prevented from moving off the hooks, however, the strips **38** also prevent movement of the bucket in this direction. The spacing of the hooks **37** and bucket engaging strips **38** serves to space the contacts of the device with the bucket and in this manner stabilize the bucket on the holder.

When the device forming the subject matter of this invention is used on a ladder the latter may be moved from one location to another, if desired, without removing the holder or bucket and without spilling the pain as long as the ladder is maintained in a substantially upright position.

From Figures 1 and 3 of the drawing it will be observed that the bucket holding device is arranged at one side of the bucket, it projects only a short distance above the bucket and presents a minimum of obstruction to the user's access to the contents of the bucket.

While the form of embodiment of the present invention as herein disclosed constitutes a preferred form, it is to be understood that other forms might be adopted, all coming within the scope of the claims which follow.

I claim:

1. A paint bucket holder comprising a first body shaped to extend partially around a side rail of a ladder and hang on a rung thereof; a second body pivotally supported on said first body at the outer side of said side rail, said second body having spaced flanges forming hooks which project away from the ladder side rail then downwardly and terminate in portions extending back toward the ladder, said flanges also forming stop strips below the hooks, said stop strips engaging the outer side of a paint bucket supported on said hooks.

2. A paint bucket holder comprising a channel-like body with spaced flanges; a hook-like element formed by one of said flanges; a second channel shaped body pivotally secured to the other of said flanges, the flanges of the second body projecting away from said first body, said last-mentioned flanges forming hook-shaped fingers which extend outwardly downwardly and rearwardly and stop strips below said fingers, said stop strips terminating at a substantially equal distance from the web of said second body as said fingers.

3. In a paint bucket holder, a bucket engaging and holding element comprising a body; a pair of spaced, parallel flanges projecting from said body, said flanges having portions at the upper ends which extend outwardly and downwardly and terminate in upwardly directed points disposed in spaced relation from the adjacent portions of the flanges, the lower portions of said flanges projected outwardly and terminating substantially in vertical registration with the terminations of the upper portions.

4. In a paint bucket holder, a bucket engaging and holding element comprising a body; a pair of spaced parallel flanges projecting at right angles from said body, said flanges having their upper ends curving outwardly and downwardly and terminating in upwardly directed points disposed in spaced relation from the adjacent portions of the flanges; and bucket engaging strips formed at the lower portions of said flanges.

5. In a paint bucket holder, a bucket engaging and holding element comprising a body; a pair of spaced flanges projecting from said body; a pair of hooks at the upper ends of said flanges, said hooks being shaped to project over the upper edge of a paint bucket, downwardly thereinto and upwardly under a flange formed at the upper end of the paint bucket; and bucket engaging projections at the lower portions of said flanges, said projection holding a bucket upright when suspended on said hooks.

6. In a paint bucket holder, a bucket engaging and holding element comprising a rectangular body; a flange projecting from each of two opposed edges of said body; a hook member provided at the upper portion of each flange, said hook member extending outwardly and downwardly and terminating in an upwardly directed point, said hooks being disposed in registration.

7. In a paint bucket holder, a bucket engaging and holding element comprising a rectangular body; spaced parallel flanges projecting from opposed side edges of said body; a hook member provided on each flange, said hook member extending outwardly and downwardly and terminating in an upwardly directed point; and bucket engaging edges formed on said flanges substantially in registration with the points of said hooks.

8. In a paint bucket holder, a bucket engaging and holding element comprising a body; hook members projecting from said body, said hook members being shaped and disposed to enter the open upper end of a paint bucket, engage the under side of a flange extending around the open

end of the bucket at circumferentially spaced points, and support the bucket; and bucket abutting edges projecting from said body to prevent swinging movement of said bucket on said hooks.

9. In a paint bucket holder, a bucket engaging and holding element comprising a sheet metal piece stamped to provide a hook-like member at each end, said hook-like members curving outwardly and downwardly and terminating in upwardly directed points, said piece being bent to place the hook-like members in planes extending laterally of said piece.

JAMES W. WRAITH.

REFERENCES CITED

The following references are of record in the file of this patent:

UNITED STATES PATENTS

Number	Name	Date
1,593,043	Stroecker	July 20, 1927
1,880,319	Iasillo	Oct. 4, 1932
2,243,799	Glosier	May 27, 1941
2,308,805	Dahl	Jan. 19, 1943
2,367,256	Atkins	June 16, 1945
2,444,986	Gebhardt	July 13, 1948
2,541,390	Weigand	Feb. 13, 1951

OTHER REFERENCES

Publication, Popular Mechanics for July 1947, p. 126. (Copy Div. 52.)