May 18, 1965 B. S. OLSSON 3,183,788

DEVICES FOR PERFORMING ROTATIONAL MOVEMENTS

Original Filed Nov. 9, 1962

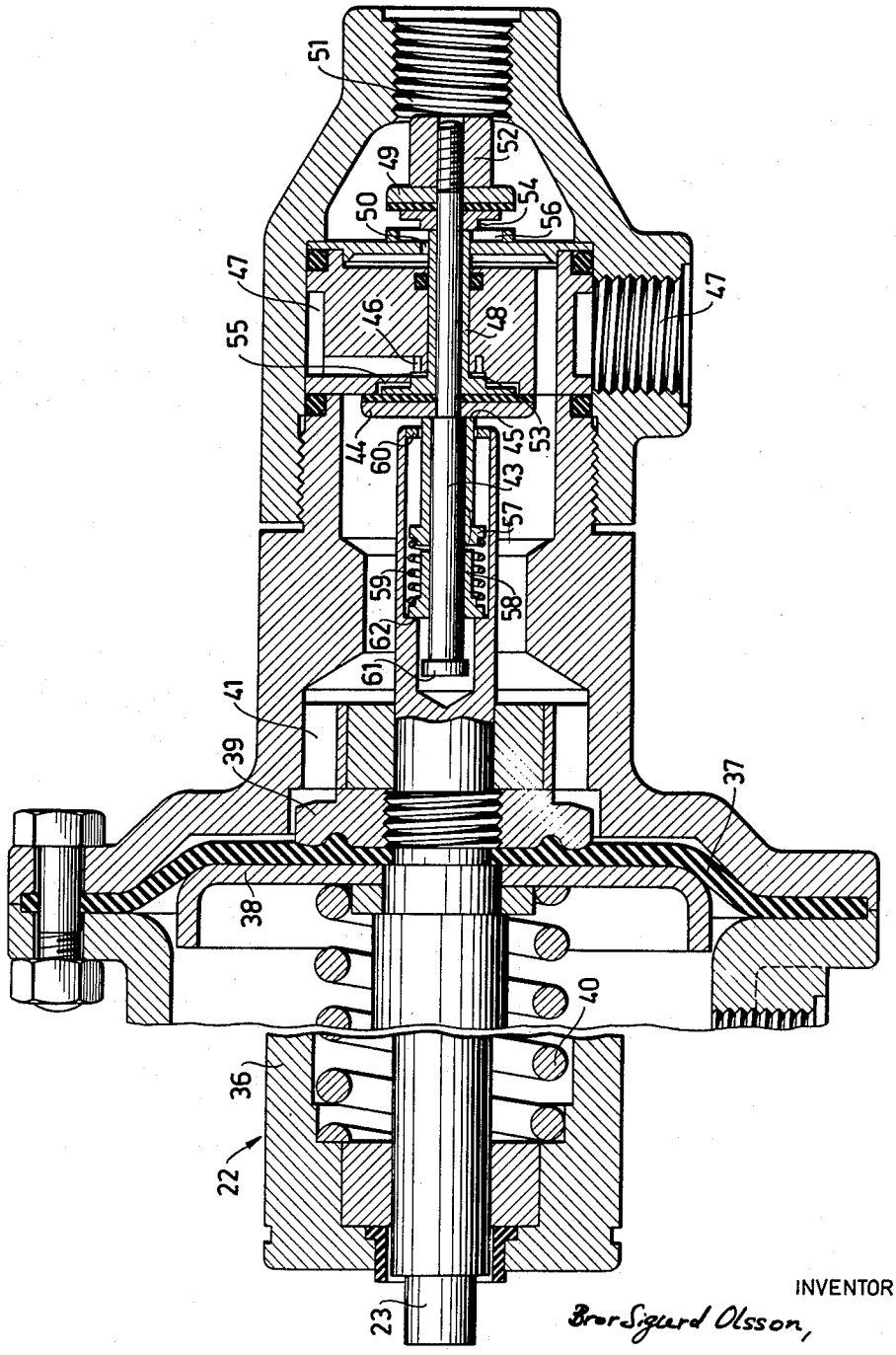

INVENTOR:
Bror Sigurd Olsson,

BY Edward D. Manwaring,
HIS ATTORNEY.

United States Patent Office 3,183,788 Patented May 18, 1965

3,183,788

DEVICES FOR PERFORMING ROTATIONAL MOVEMENTS

Bror Sigurd Olsson, Mariestadvagen 22, Johanneshov, Sweden

Original application Nov. 9, 1962, Ser. No. 236,576. Divided and this application Nov. 19, 1963, Ser. No. 324,701

5 Claims. (Cl. 91—342)

This is a division of my co-pending application Ser. No. 236,576, filed November 9, 1962.

This invention refers to an improved fluid actuated servomotor having a reciprocating actuation member adapted to drive for example the device for performing reversible rotational movements.

It is among the principal objects of the invention to provide an improved mechanism for a pressure fluid actuated servomotor comprising a reciprocating working member and double valve means for the supply and discharge of pressure fluid.

Another object of the invention is to provide improved valve means in which merely a small force is needed for the opening and closing, respectively, of the valve, with the movable parts thereby being subjected only to extremely slight wear. For this purpose the adjustment of the valve means is arranged to be carried out in two steps, while creating an almost entire pressure equalization on valve elements in the first of said steps.

Another object of the invention is to provide improved valve means that permits spacious flow areas with extremely small movements of the valve elements.

Still another object of the invention is to provide improved valve adjustment means operatively connected with the reciprocating member of the servomotor so that said member is permitted to move while accumulating a force for a subsequent reverse adjustment of the valve means.

Another object of the invention is to provide shoulders on the valve plates of said double valve means, said shoulders making a sliding fit with a flow operating inside the seats for said valve plates during a limited portion of the movement of the respective valve plate, annular spaces being provided around each of said flow openings between the valve plate and its belonging seat.

The foregoing objects of the invention and other objects will become apparent as the description proceeds with reference to an embodiment shown on the annexed drawing.

In the drawing the single view is a sectional view of a servomotor adapted for reciprocating movements and provided with a valve mechanism according to the invention.

The embodiment shown in the figure illustrates a reciprocating servomotor 22 suitable for incorporating into a device for performing rotational motion of a spindle for a valve by means of a pawl cooperating with a ratchet wheel. The valve structure according to the invention can, however, be utilized in any fluid pressure motor of suitable type.

Said servomotor 22 comprises a casing 36 enclosing a reciprocating rod 23 attached to a diaphragm 37 by means of suitable elements 38, 39. A spring 40 urges the diaphragm constantly to the right in the figure. A working chamber 41 adapted to receive pressure fluid is provided on the opposite side of said diaphragm 37. An end portion of the reciprocating rod 23 having an inner chamber or bore 42 for a valve stem 43 extends into said working chamber. Said valve stem 43 axially displaceable in said chamber 42 supports a valve plate 44 resting against

a shoulder 45. The valve plate 44 acting as a discharge valve cooperates with a valve seat provided with flow openings 46 in communication with a discharge opening 47. A spacer sleeve 48 is provided on the valve stem 43 for fixing the distance between said discharge valve plate 44 and an inlet valve plate 49 cooperating with a valve seat around a flow passage 50. Through said flow passage 50 when open pressure fluid can enter into the working chamber 41 from an inlet 51 adapted to be connected with a pressure fluid source not shown. A nut 52 is screwed on the stem 43 to fix the valve plates 44 and 49 on the valve stem 43. It should be noticed that the discharge valve plate 44 is greater than the inlet valve plate 49.

The valve plates 44 and 49 are provided with shoulders 53 and 54 adapted to slidably fit each in a corresponding part 50 and 53 respectively of the flow opening so that annular or ringshaped surfaces are defined around said parts of the openings between the valve plates 44, 49 and their seats, when the valve plates rest against their valve seats. With the respective valve plates in this position the flow of fluid is entirely cut off and the connections between on one hand said annular spaces and on the other hand the spaces 41 and 51, as the case may be, are broken. However, as a result of limited movements of the valve plates 44, 49 in the respective directions towards and from their seats, namely with the respective valve plates positioned at a distance from their seats, the annular spaces 55, 56 connect to the spaces 41 and 51, respectively, outside the valve plates 44, 49, with the respective shoulder 53 or 54 still closing the actual flow passage through the valve. In this manner the valve plates are balanced at the beginning of closing or opening the valve, whereby only a small force on the valve plates will be necessary to urge the same towards and from their seats, respectively, thereby effecting final closing or opening of the valve.

Outside the valve plate 44 the valve stem 43 extends into the chamber 42 in the end of the reciprocating rod 23. A pair of sleeves 57 and 58 is axially slidable on the valve stem 43. A compression spring 59 is provided between said sleeves 57 and 58. The sleeve 57 adjacent to the valve plate 44 is longer than the other sleeve 58 and rests against the valve plate 44 when the discharge valve 44 is closed. Arresting means 60 is provided at the opening of the bore 42 to engage a flange on the end of the sleeve 57 opposite said valve plate 44 and an inner shoulder 62 of the bore 42 acts as a stop for the other sleeve 58. The end of the valve stem 43 is provided with a head 61 adapted in certain positions of the valve stem 43 to engage the shorter sleeve 58.

The servomotor with its adjusting valve mechanism acts in the following manner:

The diaphragm 37 which obviously also can be replaced by a piston or any other element moving to and fro is assumed to take up a position defined by a resilient force such as a force created by the spring 40 and in which position the discharge valve 44 is closed. The diaphragm 37 and its reciprocating working stem 23 is located in a housing 36. Pressure fluid for moving the diaphragm 37 against the force of the spring 40 is supplied through the inlet opening 51 and passes through the flow opening of the inlet valve 49 into the working chamber 41 on the rear side of the diaphragm 37 and moves said diaphragm to the left in the figure against the force of the spring 40 as an overpressure is built up in the working chamber 41. During this movement the discharge valve plate 44 is kept closed on one hand by the action of the spring 59 between said sleeves 57 and 58 on the valve stem 43 and on the other hand by the overpressure acting on the valve plate 44, the opposite side of which being subjected to atmosphere pressure. During the movement of the diaphragm 37 with its rod 23 the shorter or inner sleeve 58

is caused to move with the rod 23 while resting against the shoulder 62 by the action of the compression spring 59 between said sleeves 57 and 58. After having moved a predetermined length the inward stop means 60 at the end of the bore 42 in the rod 23 engages a flange on the longer or outer sleeve 57. In this position the spring 59 creates no longer any force on the sleeve 57 and consequently on the valve plate 44 so that the latter is kept in place only by the overpressure of the fluid in the working chamber 41. At further movement of the rod 23 to the left in the figure the stop means 60 moves the outer sleeve 57 along the valve stem 43 while loading the compression spring 59 between the two sleeves 57 and 58, as soon as said sleeve 58 engages the head 61 of the valve stem 43. Near the end of the outward stroke of the rod 23 the sleeve 57 will come into contact with the inner edge of the adjacent sleeve 58. Due to the fact that in this position the sleeves 57, 58 and the head 61 are in mechanical contact with each other a jerk will be subjected to the valve stem 43 and as a result thereof the discharge valve plate 44 will be moved to some extent away from its seat and the pressure fluid in the working chamber 41 rushes into the annular space at the rear side of the valve plate 44.

Due to the above described sliding engagement of the shoulder 53 with the fluid flow opening 46 the latter will still be closed at said limited movement resulting in an essential reduction of the closing force acting on the valve plate 44 due to the pressure equalization on both sides of the valve plate 44.

Since the valve plates 44 and 49 are arranged as a unit on the valve stem 43 and in a constant distance from each other the inlet valve plate 49 will simultaneously move a corresponding length in a direction towards its valve seat thereby reducing the area of the fluid flow opening 50 through the inlet valve.

In the just described position of the sleeves 57, 58 and valve stem 43 a clearance is present between the shoulder 62 of the bore 42 and the edge of the sleeve 58. Due to the reduction of the force acting on the discharge valve plate 44 the compressed spring 59 between the sleeves 57 and 58 is able to expand somewhat thereby moving the valve stem 43 being in contact with the sleeve 58 by its head 61 in a direction away from the discharge valve seat. The discharge valve plate 44 is thereby entirely removed from its seat and the working chamber 41 is brought in free communication with the annular space 55 permitting fluid in the working chamber 41 to escape to the discharge 47 whereby said working chamber 41 will be unloaded from fluid pressure and receives atmosphere pressure. At the same time the inlet valve plate 49 will engage its seat and close the communication for pressure fluid to the working chamber 41 definitely.

Owing to said pressure fall in the working chamber 41 the spring 40 of the servomotor can anew urge the diaphragm 37 and the reciprocating rod 23 to the right in the figure.

At the movement of the reciprocating rod 23 inwardly the spring 59 between the sleeves 57 and 58 expands while the sleeve 57 moves relative to the valve stem 43 toward the valve plate 44. As soon as the sleeve 58 engages the inner shoulder 62 of the bore 42 the intermediate spring 59 will be compressed anew and the discharge valve plate 44 will be closed in two steps under the action of said compression spring 59 and the mechanical contact between the sleeves 57, 58 and rod 23 respectively.

In the first of said steps the inlet valve 49 is moved out of engagement with its seat while its shoulder 54 still closes the passage through the valve and the shoulder 53 of the discharge valve plate 44 reduces the flow area to the outlet 47 and in the second step the inlet valve plate 49 entirely opens the passage through said valve while the discharge valve plate 44 engages its seat. Thereby fresh pressure fluid is supplied to the working chamber 41 and the action of the reciprocating rod 23 is reversed.

I claim:

1. Plate valve means, for use in connection with a pressure fluid actuated servomotor including a reciprocating working element, said plate valve means being adapted for supplying and discharging pressure fluid to a working chamber of the servomotor, said plate valve means comprising two opposite movable valve plates interconnected for tied movement and two seats defining valve flow openings, a shoulder formed on each valve on each plate making a sliding fit with the flow opening of the respective valve seat along a limited length of the stroke of the plate, and an annular space defined around said flow opening between each valve plate and its seat, thereby balancing the pressures on the opposite surfaces of the valve plates prior to valve closing and opening.

2. A double plate valve, for use in connection with a pressure fluid actuated servomotor including a reciprocating element, said double plate valve comprising two valve seats each defining a flow opening and two facing movable valve plates, a common stem carrying and interconnecting said plates, each plate adapted to cooperate with its seat to form a supply valve and a discharge valve respectively, a shoulder formed on each valve plate making a sliding fit with the flow opening of the valve along a limited length of the stroke of the valve disk, an annular space defined around the flow opening of each valve between the valve plate and its seat, and means adapted to be operatively connected with said reciprocating element for moving said common valve stem at the ends of the stroke of said reciprocating element and for changing-over the engagement of said valve plates.

3. A valve as claimed in claim 2 in which the discharge valve plate is larger than the supply valve plate.

4. In a double plate valve, for use in connection with a pressure fluid actuated servomotor including a reciprocating element, said double plate valve comprising two valve seats each defining a flow opening, and two facing movable valve plates, a stem, said plates being connected to and movable with said stem and adapted each to cooperate with its seat to form a supply valve and a discharge valve respectively, a shoulder formed on each valve plate making a sliding fit with the flow opening of the valve along a limited length of the stroke of the valve disk, an annular defined space around the flow opening of each valve between the valve plate and its seat, and connection means adapted to be operatively connected with said reciprocating element including spring means operable to be loaded to act in opposite directions at the ends of the stroke of said reciprocating element, said connection means being adapted to engage said valve means at the very ends of the stroke of said reciprocating member in order to initiate the movement of said double plate valve then completed by said accumulated spring action acting against a reduced force determined by the area of said shoulder.

5. In a pressure fluid actuated servomotor including a reciprocating element and double plate valve comprising two facing valve plates fixed to a common stem and adapted each to cooperate with its seat to form a supply valve and a discharge valve respectively, the provision of a shoulder on each valve plate making a sliding fit with the flow opening of the valve along a limited length of the stroke of the valve plate, an annular space formed around the flow opening of each valve between the valve plate and its seat, adapted to be brought into communication with the space outside said valve plate during said limited length of the stroke of the valve, and means operatively connected with said reciprocating element for moving said common valve stem at the ends of the stroke of said reciprocating element and changing-over the engagement of said valve plates in two steps, said connection means comprising an extension of said valve stem movable parallel with said reciprocating member and sup-

porting two sleeves slidable on the stem, a compression spring operating between said two sleeves, stop means on said valve stem for limiting the movement of said sleeves in both directions and spaced stop means on said reciprocating member adapted to cooperate with oppositely directed surfaces on said sleeves at the ends of the stroke of said reciprocating member for loading said compression spring before the valve stem is positively actuated by said reciprocating member for initiating the movement of said double valve then completed by the accumulated spring action against a reduced force.

References Cited by the Examiner

UNITED STATES PATENTS

897,364	9/08	Glauber	251—210
1,036,630	8/12	Irwin	91—342
1,061,556	5/13	Osborne	251—210
2,080,695	5/37	Cargile	91—341
2,603,191	7/52	Sterrett	91—341
3,013,531	12/61	Mueller	91—342
3,082,596	3/63	McGay	91—341

FRED E. ENGELTHALER, *Primary Examiner.*