United States Patent

[11] 3,591,279

[72] Inventors John F. Gardner
Penfield, N.Y.;
Michael B. Parry, St. Peter, England

[21] Appl No 829,623
[22] Filed June 22, 1969
[45] Patented July 6, 1971
[73] Assignee Xerox Corporation
Rochester, N.Y.

[54] CUT AND DEFLECT WEB DRIVE APPARATUS
6 Claims, 5 Drawing Figs.

[52] U.S. Cl. 355/29, 355/13, 83/106, 101/227
[51] Int. Cl. G03b 29/00
[50] Field of Search ..... 355/13, 29; 95/31 C, 34 A

[56] References Cited
UNITED STATES PATENTS
3,507,573 4/1970 Sage et al 355/13

Primary Examiner—Samuel S. Matthews
Assistant Examiner—E. M. Bero
Attorneys—Paul M. Enlow, Ronald Zibelli, James J. Ralabate, Norman E. Schrader and Franklyn C. Weiss

ABSTRACT: A cut and deflect paper system for allowing printed documents to be exited from the system while scrap paper ahead of, intermediate, or behind said printed documents are cut and deflected into a scrap or waste area within the system. In a continuous web document-printing system, under control of a control electronics, a brake halts the paper movement through the system and a knife cuts the paper into predetermined lengths of normal document sizes. A deflector system in the paper path following the cutter allows printed documents to pass out of the system while it deflects scrap sheets into said scrap area in the system.

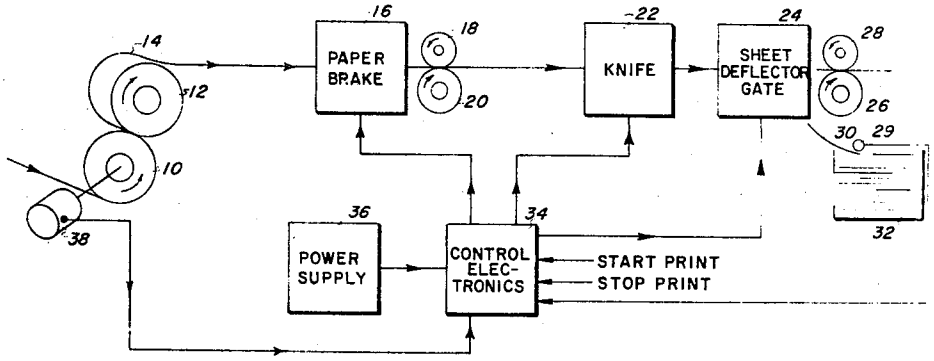

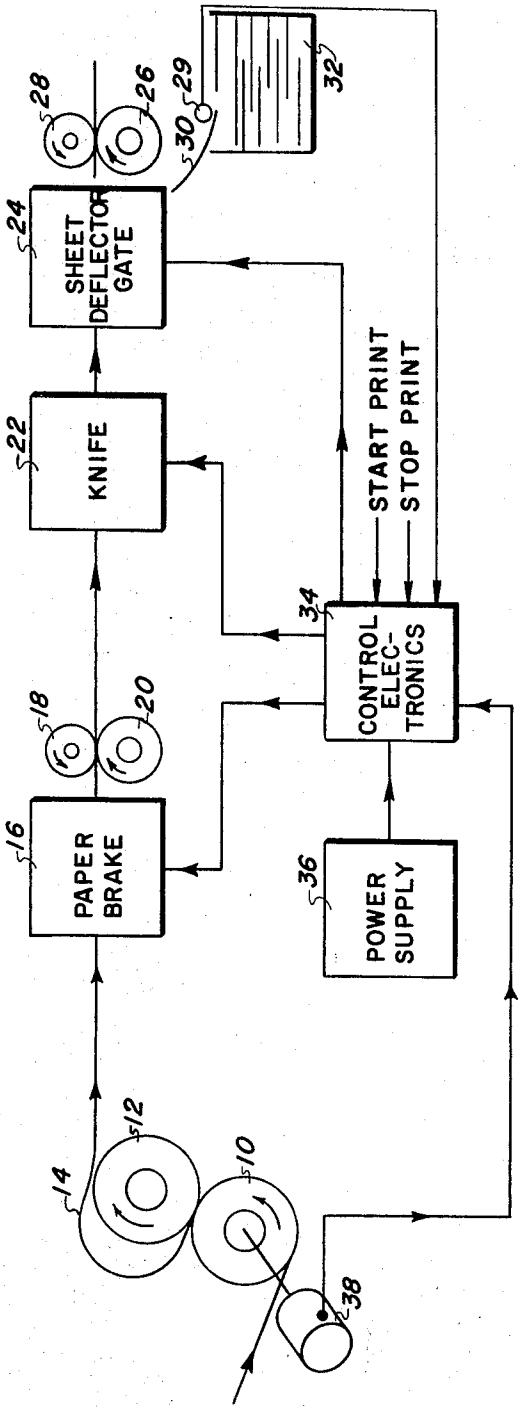

FIG. 1

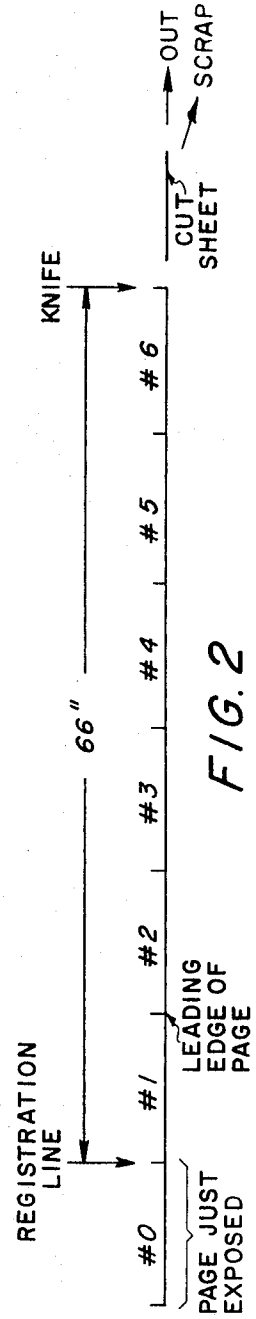

FIG. 2

INVENTORS

JOHN F. GARDNER
MICHAEL B. PARRY

BY Franklyn C. Weiss
ATTORNEY

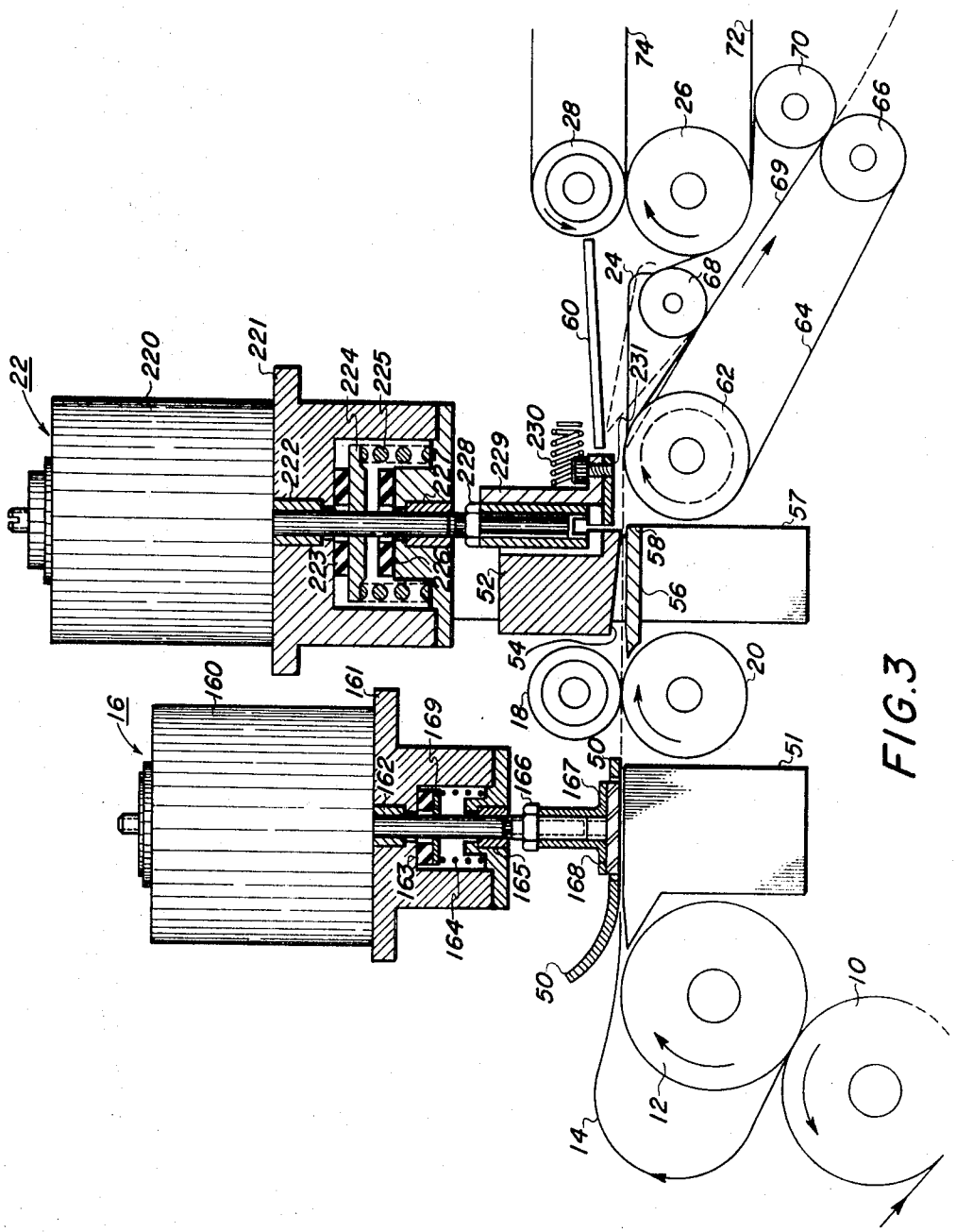
22
220
221
224
225
222
223
226
227
228
229
230
231
60
24
28
26
74
72
70
66
69
68
64
62
57
58
56
52
54
18
20
16
160
161
162
163
164
165
166
167
168
169
50
51
10
12
14

FIG. 3

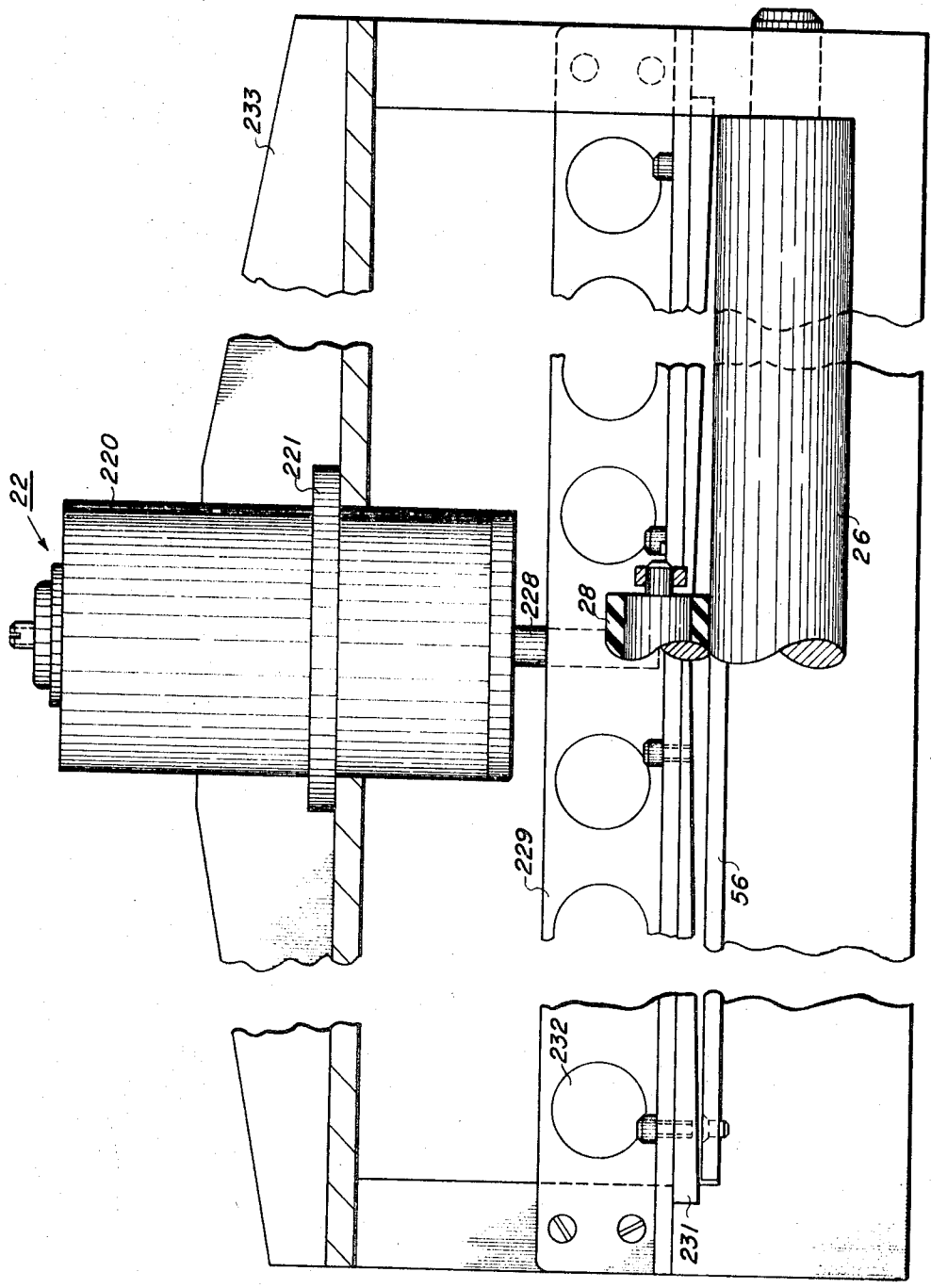

FIG. 4

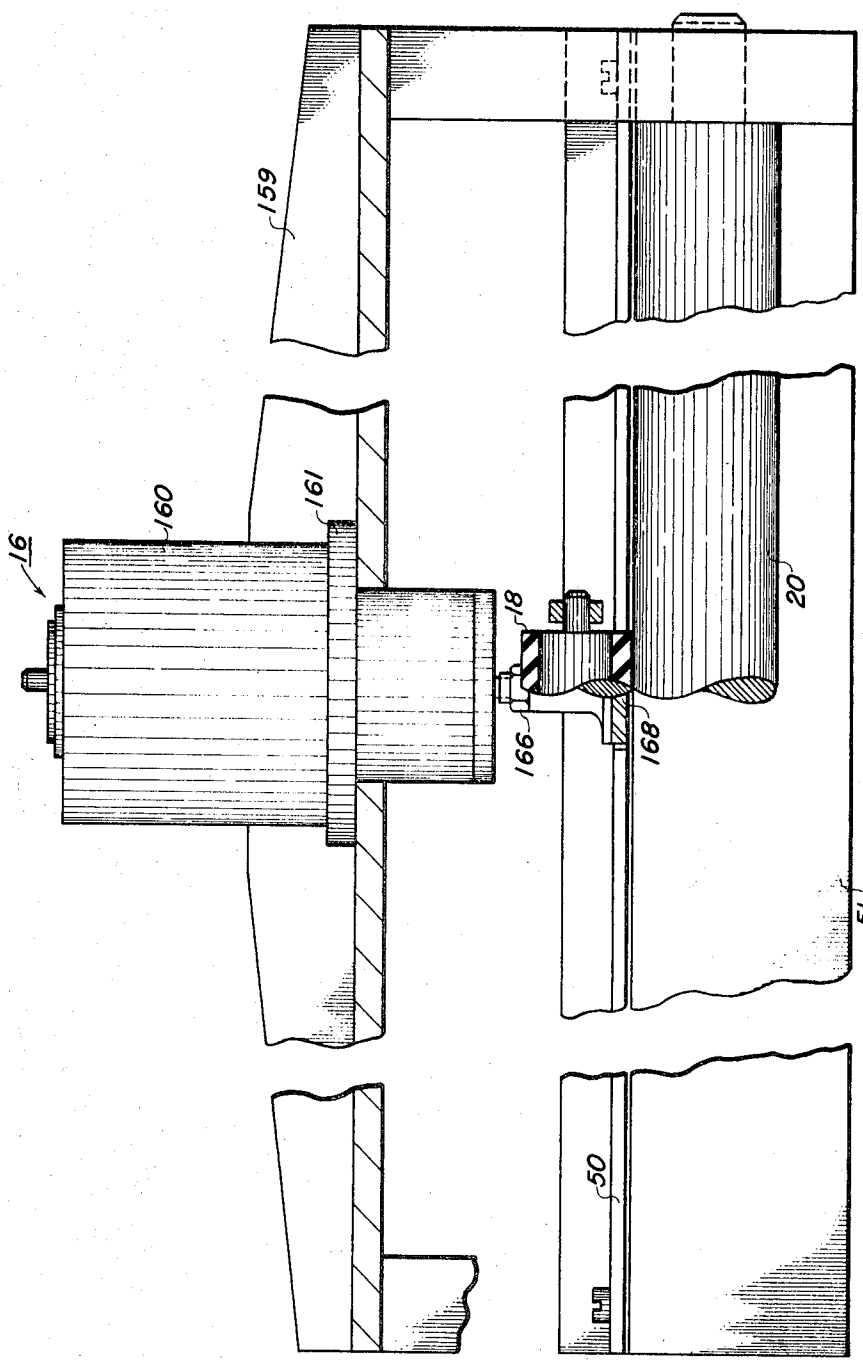

FIG. 5

CUT AND DEFLECT WEB DRIVE APPARATUS

BACKGROUND OF THE INVENTION

The data processing industry has progressed to the point that data processing equipment performs programmed instructions at such a rapid rate that the major limitation to the speed of the system is in the printing or recovery of the data from the data processing system. May prior art methods are known for recovering the output information such as the use of magnetic tape units, magnetic disc files, or punched cards. Such techniques, however, are only intermediate steps for storing the output information so as not to slow down the operation of the data processing system. That is, subsequent printing must eventually take place to provide a hard copy output for visual observation and examination.

Present techniques of printing output information include many of the impact typewriting units or stylus scan electrographic apparatus for permanent retention of the information. Other systems might include cathode ray tube printing where the image on the face of the cathode ray tube is a direct readout from the computer in an on line mode or from said magnetic tapes or discs in an off line mode. The cathode ray tube image would be impinged on or transferred to a document in any of the known prior art xerographic or electrostatic techniques and subsequently developed and fixed for permanent retention. In such a cathode ray tube system, the speed of the paper movement must be such as to provide continuous readout from the computer with little or no buffering of the output information. As there usually is a discrete amount of unprinted or misprinted paper subsequent to the printing area, provisions must be made for exiting the valid printed information in the form of documents of standard or other size from the system in a bound, unbound or stapled, etc., condition. Because of the high speed of many such cathode ray tube printers, scrap paper ahead of, intermediate, and behind valid printed documents presents a disposal problem in that the volume of the printed information makes manual separation of scrap paper and valid printed documents unnecessarily time consuming and expensive, thereby limiting the effectiveness of the cathode ray tube printer or other type of output printing system in a data processing center or the like.

OBJECTS

It is, accordingly, an object of the present invention to provide an improved paper-handling system in a data-printing system.

It is another object of the present invention to increase the efficiency of a data processing system utilizing high-speed paper printing apparatus.

It is another object of the present invention to separate valid printed documents and scrap paper in a data-printing system.

It is another object of the present invention to provide a cut and deflect paper-handling system to deflect valid documents in one output direction and scrap paper or sheets in another output direction.

It is another object of the present invention to provide cut and deflect paper apparatus in a continuous web data-printing system whereby valid documents will be exited from the system while scrap paper or sheets will be cut and deflected into a scrap area for subsequent disposal.

BRIEF SUMMARY OF THE INVENTION

In accomplishing the above and other desired aspects of the present invention, applicant has invented improved apparatus for cutting and deflecting those valid documents and scrap paper between said documents into discrete paths for separate operation. In a continuous web data-printing system a brake is provided for halting the movement of the paper prior to cutting into discrete documents. Once the paper has been halted, a cutter is energized to accurately cut the paper into

predetermined lengths. To allow for continuous printing by a data processor, the paper therefrom continues to be moved into the system to form a loop around drive or tension roll while the paper is braked for the cutting action. After the cut, higher speed loop cancellation rolls rapidly advance the paper, thereby removing the paper loop to allow for the next paper brake and cutting sequence.

Subsequent to the knife station, a sheet deflector gate is energized under control of a control electronics to deflect valid documents to an output stacker, binder, or stapler, etc. If the control electronics determines that the cut sheet is scrap paper, the sheet deflector gate is energized to deflect the scrap paper along a separate path to a scrap area or box within the system for later disposal at the operator's convenience.

DESCRIPTION OF THE DRAWINGS

For a more complete understanding of the invention, as well as other objects and further features thereof, reference may be had to the following detailed description of the invention in conjunction with the drawings wherein:

FIG. 1 is a block diagram of the cut and deflect system incorporating the principles of the present invention;

FIG. 2 is a representative diagram of the number and position of documents in the system which is helpful in understanding the operation of the apparatus in FIG. 1;

FIG. 3 is a side view section drawing of the apparatus incorporating the principles of the present invention;

FIG. 4 is an end view of the knife assembly seen in FIG. 3; and

FIG. 5 is an end view of the brake assembly seen in FIG. 3.

DETAILED DESCRIPTION OF THE INVENTION

FIG. 1 is a partly schematic diagram showing the overall system of the present invention. The input paper is from a continuous roll of paper, which when applied to drive roller **10** is just coming from a document reproduction or printing system of any type known in the prior art. Of the embodiment disclosed in the present application, discrete documents of 8½ by 11 inches or of any other size are formed by the data-printing system positioned ahead of the apparatus of the present invention. The paper path continues around the drive roll **10** and around drive roller **12** past the paper brake assembly **16**. The paper is advanced past the paper brake assembly **16** by loop cancellation rolls **18** and **20**. From the loop cancellation rolls the paper passes the knife station **22** which cuts the document to the predetermined size as necessitated by the length of the document printed. If the paper now passing the knife station **22** is a printed document, the sheet deflector gate **24** will deflect the cut document to the path determined by the sheet exit rolls **26** and **28**. If, however, the paper to be cut is scrap paper, which would occur during various conditions which will hereinafter be more fully discussed, the sheet deflector gate **24** operates to deflect the cut paper from knife **22** into the scrap box **32** by means of path **30**. Thus, only actual documents will be emitted from the system while scrap paper from other conditions will be cut and deposited in a scrap box within the apparatus.

Controlling the operation of the mechanical apparatus of the present invention is the control electronics **34** deriving power from power supply **36**. Coupled to drive or tension roll **10**, is the paper flow counter **38**. This counter determines the length of paper which has been processed by the data system upon entrance into the area of the drive roller **10**. The amount of paper passing through the system is monitored by the control electronics **34** which will selectively operate the paper brake **16**, knife **22**, and sheet deflector gate **24** for proper cutting and feeding out of the documents and scrap sheets from the system.

Seen in FIG. 1 is the paper loop **14** adjacent the drive roll **12**. When the control electronics **34** determine that the paper passing the knife station **22** should be cut, a signal is applied to the paper brake **16** which halts the movement of the paper

through the system. Once the paper has come to a complete stop, the control electronics 34 selectively energizes the knife 22 which cuts the paper at the predetermined location. As above, if the paper is a document, it will be exited through the sheet exit rolls 26 and 28. If, however, the paper is scrap, the sheet deflector gate 24 will deflect the scrap paper into scrap box 32. During the time that the paper brake 16 is holding the paper stationary, the drive-tension roll 10 is still drawing the paper from the data system at a uniform rate. This is to allow the continuous operation of the data-printing system without interruption by the operation of the knife 22. Once the knife has cut the paper and the paper brake 16 has been released, the loop cancellation rolls 18 and 20, which operate at a faster rate than the drive rolls 10 and 12, rapidly advance more paper to the cutting area and, most importantly, eliminate the paper loop 14 formed around tension roll 12. The sheet exit rolls 26 and 28 may operate at a speed equal to the input paper speed to tension roll 10, but for faster exiting of the documents from the system, the sheet exit rolls move the paper away from the sheet deflector gate at a faster rate to leave more space between discrete documents for any sort of output unit such as a paper stacker, binding unit, or stapling machine, etc.

The apparatus of the present invention must be designed to operate under any one of various conditions. That is, scrap paper must be eliminated in a "start pring" condition, as when the unit is energized; in a "stop print" as when printing has ceased and the last document has been exited from the system; when a paper jam, print or developing malfunction occurs; and other situations as will become more apparent.

In the start print mode, as when one or more documents is to be printed, the paper from the printing station, now shown, to the output of the system, must be eliminated so as not to mix at the output printed documents and scrap paper. As shown in FIG. 1, taken in conjunction with FIG. 2, all the paper shown in the FIG. 1 must be scrapped prior to the exiting from the system of the first printed document. FIG. 2 shows that the distance from the registration line, that is, the leading edge of the next document to be exposed, to the knife edge would be, for example, the length of six documents. Since the scrap box 32 in FIG. 1 must contain the 66 inches or thereabouts of scrap, the system must cut the paper into lengths say no shorter than 3 inches and no longer than 11 inches. Thus, after a document is printed, as seen in FIG. 2, the length of paper preceding the area on which the document is printed is cut into the 3 to 11 inch segments upon operation of the paper brake 16, the knife 22, with the sheet deflector gate 24 deflecting the scrap pieces to the scrap box 32, all under control of the control electronics 34. When the leading edge of the document reaches the knife 22, the paper is now cut with the paper preceding the leading edge of the document already cut and directed to the scrap box 32. Now, however, the paper flow counter 38 has indicated to the control electronics 34 that the leading edge of the document now appears at the knife station 22. The control electronics 34 operates the sheet deflector gate 24 to now direct the output of the document through the sheet exit rolls 26 and 28. As long as documents continue to be printed by the data printer, the paper flow counter and other indications to the control electronics 34 will enable the knife 22 to cut the printed documents into the correct sheet lengths. These output documents will be stacked, bound or stapled or operated on in any of the known prior art manners.

After the control electronics 34 has been informed by the data printer by circuitry not shown that the last document has been printed and has been cut by the knife 22, the sheet deflector gate 24 is deflected toward the scrap box 32. That is, after the last printed document has been transferred out of the system through gates 26 and 28, the sheet deflector gate is enabled to direct future paper to the scrap box until further documents are printed. When the last document is cut by knife 22, it still must be moved through the sheet deflector gate area and out by the sheet exit rolls 26 and 28. The blank paper that immediately followed the printed document continues to move right behind the last printed document and it is this lagging blank paper that is to be scrapped after the printed document has left the sheet exit roll area. When the last printed document has left the area the system is disabled and the remaining blank paper past knife edge 22 is scrapped in the scrap box 32.

There is, therefore, a startup scrap cycle and a shutdown scrap cycle so as to insure that nothing but valid printed documents are exited from the system. A typical figure of the worse case start up print scrap cycle would be 91.5 inches from the beginning of the printing area to the paper cut at the knife edge 22. A typical figure for the total waste at the stop print or shut down procedure would be 28.8 inches of scrap at the shutdown. Therefore, from a shutdown to the next startup, the total waste would be, for example, 120.3 inches, which must be cut into lengths not shorter than 3 inches and not longer than 11 inches for deposit into scrap box 32. It is to be understood that these figures are exemplary only as different data print dimensions and cut and deflector system dimensions would alter these figures and require different time and paper flow cycles under control of the control electronics 34. Other cut and deflect cycles are initiated such as when an emergency occurs and power must be immediately withdrawn from the system; as when the source of data to the data printer indicates that the information printed was in error and must be disregarded, etc. The control electronics would be so designed as to compensate for these various and other conditions which require the cut and deflection of blank scrap paper.

In the scrap box 32 may be situated a photodetector 31 which in the start print cycle limits the scrap lengths to within 3 inches to 11 inches. That is, after a previous stopping of the system, there may be no control as to where the leading edge of the paper is beyond the knife edge and extending into the scrap box 32. In order to allow the scrap paper to lie flat in the scrap box 32, normalization is needed to insure that none of the cut sheets are less than 3 inches or more than 11 inches long. The photodetector 31, which may be, for example, 3 inches ahead of the knife edge 22 in the scrap path, detects the presence of paper and indicates to the control electronics 34 to initiate a cutting sequence by operation of paper brake 16 and knife 22.

Referring now to FIG. 3, there is shown the cut and deflector system in more detail which includes all the features of the present invention. The paper from the data-printing system enters into the cut and deflect assembly by means of drive roller 10. The paper passes around drive roller 12 and enters into the brake and cut apparatus for cutting and deflection to the scrap box or the output from the system. The system seen in FIG. 3 will be described with the same designation numerals as with similar components seen and described in conjunction with FIG. 1. Brake solenoid 16 is shown partly in section to note the operation thereof. Within housing 160 is the coil and other apparatus for the operation of shaft 166 to stop the paper 14 upon the proper control from control electronics 34. Shaft 166 passes through housing 161 and the various components therein. Sleeves 162 and 165 allow for accurate and smooth operation of the brake by means of the coil within housing 160. When the coil in the solenoid is activated, shaft 166 and foot 167 press the brake pad 168 against document 14 and subsequently against the back stop 51. As soon as the signal from control electronics 34 is received at the solenoid 16, the paper movement ceases by the action of the brake pad 168 against the back stop 51.

In actual operation there would be some slippage of the paper past the brake solenoid 16 until the full force thereof can halt the movement of the paper. The movement is insignificant, however, and, therefore, for purposes of discussion it will be assumed that no slippage occurs. After the cutter has cut the paper the brake solenoid is released by the control electronics 34 and by means of spring 164 the brake pad is released from the paper and shaft 166 withdraws to the rubber return stop 163 by means of the shoulder 169. During the time

that the brake halts the action of the paper through the system, paper drive roller **10** is continuously moving the paper into the area. Accordingly, a paper loop **14** forms about drive roller **12** until the brake solenoid is released. Guide plate **50** guides the paper through the area of the brake solenoid for correct paper position, etc.

Loop pull out rollers **18** and **20** in the meantime have been slipping against the halted paper **14** while the brake solenoid has been activated. Once the brake solenoid **16** is released, the pull out rollers which are rotating at a speed greater than the speed of the drive roller **10** begin moving the paper through the system again at said higher rate of speed, thereby cancelling the paper loop **14**. The paper then comes into the area of the knife solenoid **22**. Knife solenoid **22** similarly comprises housing **220** which would contain the coils and other apparatus for the necessary operation of the solenoid. Within housing **221** is the shaft **228** which moves against sleeves **222** and **227** for accurate positioning of the knife shaft. Unlike the brake solenoid **16**, the knife solenoid would have no bottom-most stopping point so there is an upper and lower rubber stop limits **223** and **226**, respectively. Upon operation of the solenoid, the shaft would be moved vertically downward until shoulder **224** contacts the rubber down stop **226** for the bottom-most point of movement. Upon releasing of the solenoid by the control electronics **34**, spring **225** would force the shaft **228** vertically upward until the shoulder **224** would contact rubber return stop **223**.

The knife solenoid further comprises the paper guides **52** and **56**. The paper **14** would be advanced past the slant edge **54** of the paper guide **52** for proper paper registration at the cutting edge **58**. As the shaft **228** is driven downward by the knife solenoid coil, the knife edge of the knife blade **231** would meet the paper at the edge **58** of the stationary cutting blade **56** to thereby cut the paper thereat. For accurate cutting of the paper, a bias spring **230** is utilized against backing angle **229** to force the cutting blade **231** against cutting edge **58** for smooth cutting and nondamage to the document formed.

After the cut paper leaves the area of the cutting solenoid, the paper has one of two paths of movement thereafter. If the sheet deflector gate **24** is in the position of the solid line shown, output roller **62** will move the document along the area of paper guide **60** to contact the sheet exit rolls **26** and **28** to exit the document from the system. For accurate movement of the document, sheet exit rolls **26** and **28** are shown to drive webs **72** and **74** for exiting the document out to one of the stacking, binding, etc., units as hereinabove set forth. If, however, the paper cut was scrap, the control electronics **34** would move the sheet deflector gate **24** to the position shown by the dashed lines in FIG. **3**. Thus, the paper would be forced to follow the path of the sheet deflector gate and web **64** driven by scrap rollers **62** and **66**. The paper would continue to move down the path defined by webs **64** and **69** which is driven by rollers **68** and **70** to the excess paper or scrap box. As long as the sheet deflector gate **24** is in the dashed line position, all cut paper would be deflected to the scrap box.

FIG. **4** shows the end view from the direction of the sheet exit from the system of the knife assembly **22** as seen in FIG. **3**. Solenoid **22** and the upper housing **220** and the lower housing **221** are shown connected to a support structure **233**. Shaft **228** can be seen to be extending vertically downward from the solenoid **22** in back of the backing angle **229**. Lightening holes **232** are formed in the backing angle **229** to decrease the weight of the backing angle itself. The document or scrap paper would be passing through the system and out of the paper when viewing FIG. **4** between pinch roll **28** and the sheet exit roll **26**. The moving cutter blade **231** is shown attached by various bolts to the backing angle **229**. The cutting blade **231** would cut the paper as the cutting blade passes the stationary cutting blade **56**. As seen in FIG. **4**, the moving cutting blade **231** is in the shape of an inverted V or is known as a "roof top" cutting blade. The roof top cutting blade is superior to other types of cutting blades in this particular application in that the blade acts as dual guillotines and is further advantageous in that the outer edge of the document are cut first allowing for superior registration of the cutting blade with the stationary blade **56** and makes for a smooth and accurate cut of the document. The shape of the blade, however, as well as the other features seen in FIGS. **3**, **4** and **5**, are exemplary only as other configurations thereof could be utilized while still maintaining the principles of the present invention.

FIG. **5** is an end view as seen from the sheet exit side of the apparatus of the brake solenoid **16** as seen in FIG. **3**. Brake solenoid **16** in the upper housing **160** and the lower housing **161** are shown attached to a support structure **159**. Upon actuation of the brake solenoid the shaft **166** would move in a vertical direction to contact the document which is moving in a direction out of the paper between pinch roller **18** and loop cancellation roller **20**. The paper is pinched between the brake pad **168** and the support member **51** to halt the movement of the paper through the system. After the brake solenoid is released by the control electronics **34**, the loop cancellation roll quickly moves the paper to the knife area thereby cancelling the paper loop as seen in FIG. **3**. The paper is guided through the area of the brake solenoid by means of the backing plate **51** and the paper guide **50** as seen to be attached to the backing plate **51** by the various bolts as shown.

In the foregoing there has been disclosed apparatus for effectively eliminating from the output of a continuous web document printing system of scrap paper upon which no information has been printed. The system has been described in a start print and a stop print mode, but it is apparent that scrap paper can be formed during other operations of the system such as misprint of information on the document, a splice detected in the continuous paper web, a form projection misapplication, an "abort" command from the data processor, or a "hard stop" condition when an emergency stop must be effected. Further, specific embodiments have been disclosed and described as to the physical placement of the brake solenoid, paper solenoid, etc. Other configurations could be utilized, such as placing the brake and knife assemblies under the path of the paper movement and having the solenoids operate in a vertically upward direction rather than the vertically downward direction as disclosed. Moreover, a specific cutting blade has been shown and described but it is apparent that any shaped cutting blade which provides a smooth and accurate cut may be utilized while still conforming to the principles of the present invention. A paper flow counter has been included in the description of the present invention which notes the amount of paper passing thereby. Other measures could be utilized, however, to note the amount of paper flow such as a line counter which would count the number of lines printed on the document, for example, while still retaining the principles of the present invention.

Thus, while the invention has been described with reference to specific embodiments, it will be understood by those skilled in the art that various changes may be made and equivalents may be substituted for elements thereof without departing from the true spirit and scope of the invention. In addition, many modifications may be made to adapt to a particular situation without departing from the essential teachings of the invention.

We claim:

1. In a data processing system including a data printer for printing information on a continuous web of record paper, cut and deflect apparatus comprising

first drive means for advancing said record paper from said data printer through said cut and deflect apparatus,

brake means for halting the movement of said paper by said first drive means,

knife means for cutting said paper after the halting thereof,

control electronics means for monitoring the operation of said data printer to selectively control said brake means and said knife means, and

sheet deflector means responsive to said control electronics means for deflecting into a first path that cut paper that contains printed information thereon and into a second

path that cut paper with a lack of printed information thereon.

2. The cut and deflect apparatus as set forth in claim 1 wherein said first drive means includes a pair of tension rolls, and wherein said paper moves around one of said rolls to the point of contact of said rolls and then around the second of said rolls, said first drive means continuing to advance said paper when said brake means is actuated, the paper thereby forming a loop around one of said tension rolls, and further including

second drive means between said brake means and said knife means for advancing said paper to said knife means, said second drive means operating at a substantially greater rate of speed than said first drive means to eliminate said loop formed around one of said tension rolls.

3. The cut and deflect apparatus as set forth in claim 2 further including

paper flow measuring means for detecting the amount of paper moving into said cut and deflect apparatus, said control electronics means being responsive thereto and the operation of said data printer to cause said paper to be cut into uniform length documents in a data-printing condition for passage along said first path and to cut said paper into lengths of an upper and lower limit in a scrap condition for disposition thereof in a scrap disposal area along said second path upon actuation of said sheet deflector means.

4. The cut and deflect apparatus as set forth in claim 3 further including

third and fourth drive means for advancing said documents and said scrap along said first and second paths respectively, said third and fourth drive means operating at a faster rate of speed than said first drive means to quickly advance said documents and scrap away from said cutting means.

5. The cut and deflect apparatus as set forth in claim 4 further including

photosensing means positioned along said second path to said scrap area for detecting the passage of scrap thereby in order to enable said control electronics to actuate said brake means and knife means to limit said scrap to said upper and lower limits of length.

6. The cut and deflect apparatus as set forth in claim 4 wherein said control electronics means includes means for detecting system conditions such that the length of paper from said data printer to said cut and deflect apparatus will be scrapped in a start print condition, the length of paper following the last document will be scrapped in a stop print condition, and the length of paper intermediate documents due to any other system condition will also be scrapped, said documents always being deflected along said first path by said sheet deflector means and said scrap paper always being deflected along said second path by said sheet deflector means.