US007011239B2

(12) **United States Patent**
Williams

(10) **Patent No.: US 7,011,239 B2**
(45) **Date of Patent: Mar. 14, 2006**

(54) **TELESCOPING ROOF BASKET ASSEMBLY FOR A VEHICLE**

(75) Inventor: **Bruce Preston Williams**, Grosse Pointe Park, MI (US)

(73) Assignee: **Ford Global Technologies LLC**, Dearborn, MI (US)

(*) Notice: Subject to any disclaimer, the term of this patent is extended or adjusted under 35 U.S.C. 154(b) by 262 days.

(21) Appl. No.: **10/249,269**

(22) Filed: **Mar. 27, 2003**

(65) **Prior Publication Data**

US 2004/0188478 A1 Sep. 30, 2004

(51) **Int. Cl.**
B60R 9/00 (2006.01)
B60R 9/042 (2006.01)

(52) **U.S. Cl.** **224/310**; 224/310; 224/319; 224/321

(58) **Field of Classification Search** 224/310, 224/309, 325, 330, 319, 321, 314, 315, 316, 224/281, 282, 485, 328, 492, 495; 414/462
See application file for complete search history.

(56) **References Cited**

U.S. PATENT DOCUMENTS

3,596,788	A	*	8/1971	Willie	414/462
3,756,648	A	*	9/1973	Greif	296/157
3,963,136	A		6/1976	Spanke	
4,223,689	A	*	9/1980	Cox	135/139
4,240,571	A		12/1980	Ernst	
4,682,719	A		7/1987	Ernst et al.	
4,757,929	A	*	7/1988	Nelson	224/329
5,417,358	A		5/1995	Haselgrove	
5,423,650	A	*	6/1995	Zerbst et al.	414/462
5,535,929	A	*	7/1996	Neill	224/310
5,690,259	A	*	11/1997	Montani	224/310
5,782,391	A	*	7/1998	Cretcher	224/310
5,884,824	A	*	3/1999	Spring, Jr.	224/310
6,015,074	A	*	1/2000	Snavely et al.	224/310
6,308,874	B1	*	10/2001	Kim et al.	224/310
6,338,427	B1	*	1/2002	Aftanas et al.	224/310
6,425,508	B1	*	7/2002	Cole et al.	224/320
6,681,970	B1	*	1/2004	Byrnes	224/310
6,729,513	B1	*	5/2004	Kmita et al.	224/320
6,761,296	B1	*	7/2004	Ford et al.	224/310
6,827,244	B1	*	12/2004	Stapleton et al.	224/310
2004/0173651	A1	*	9/2004	Kim et al.	224/310

FOREIGN PATENT DOCUMENTS

DE	4018-009 A	5/1990
FR	2623-485 A	12/1985
JP	261745	11/1987

* cited by examiner

Primary Examiner—Lee Young
Assistant Examiner—Ryan Hoesly
(74) *Attorney, Agent, or Firm*—Gigette M. Bejin; Artz & Artz P.C.

(57) **ABSTRACT**

A telescoping roof basket assembly **(10)** for attachment to a roof **(12)** of a vehicle **(14)** is provided. The basket assembly **(10)** includes a pair of rails **(18)** fixedly coupled to the roof **(12)** of the vehicle **(14)**. Each rail **(18)** defines a primary channel **(22)** and a secondary channel **(24)**. Furthermore, each primary channel **(22)** has an extension bar **(26)** slidably positioned therein for telescopically fitting the extension bar **(26)** to the rail **(18)**. The extension bars **(26)** are capable of extending rearwardly from the rails **(18)**. Moreover, these extension bars **(26)** are pivotally coupled to a front end portion of a moveable basket member **(30)**. This moveable basket member **(30)** has a rear end portion with a pair of tabs **(44)** extending therefrom. These tabs **(44)** are intended for insertion into the secondary channels **(24)** and securing the moveable basket member **(30)** to the rails **(18)**. The telescoping roof basket assembly **(10)** is moveable between a roof mounted position and a back end mounted position.

18 Claims, 14 Drawing Sheets

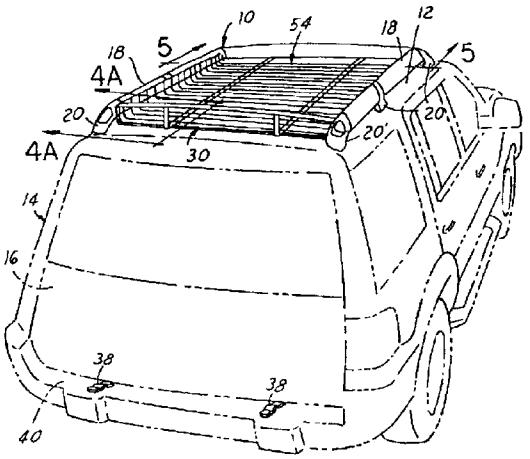

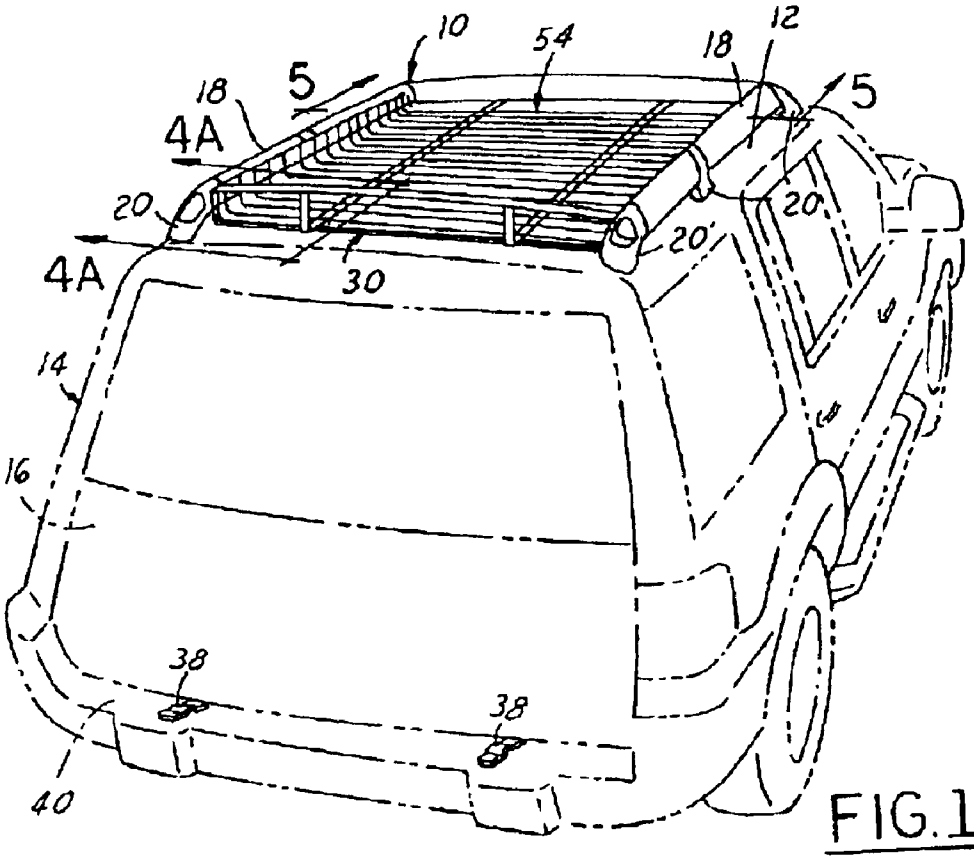

FIG. 1

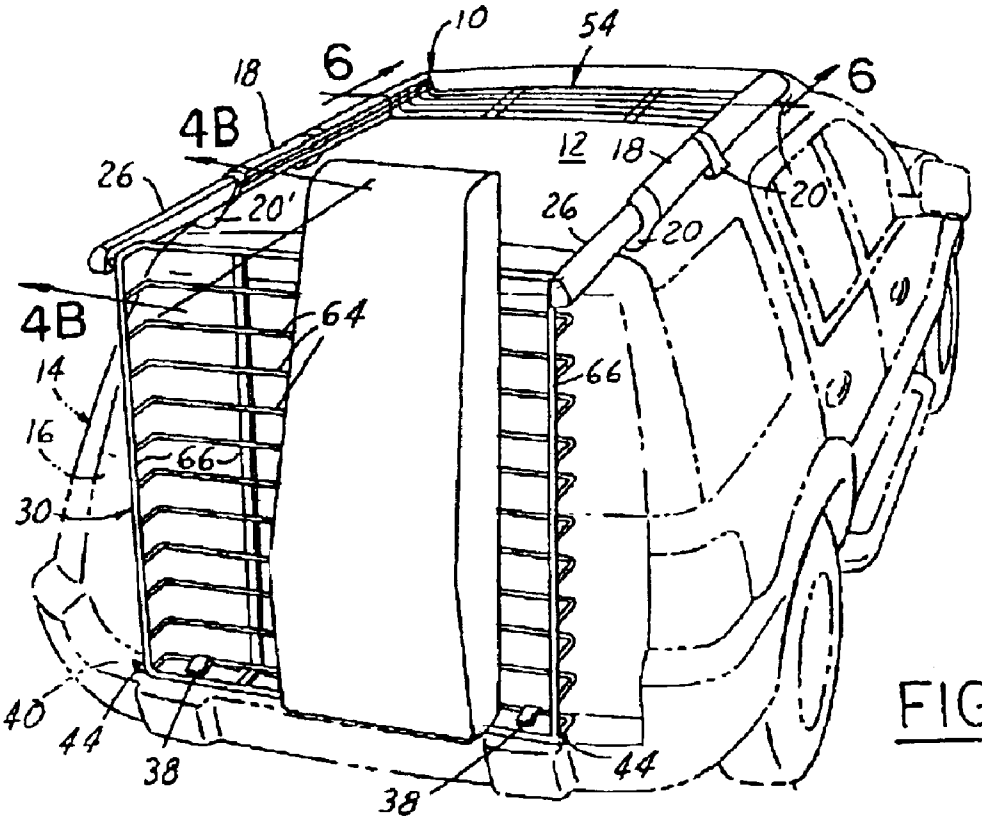

FIG. 2

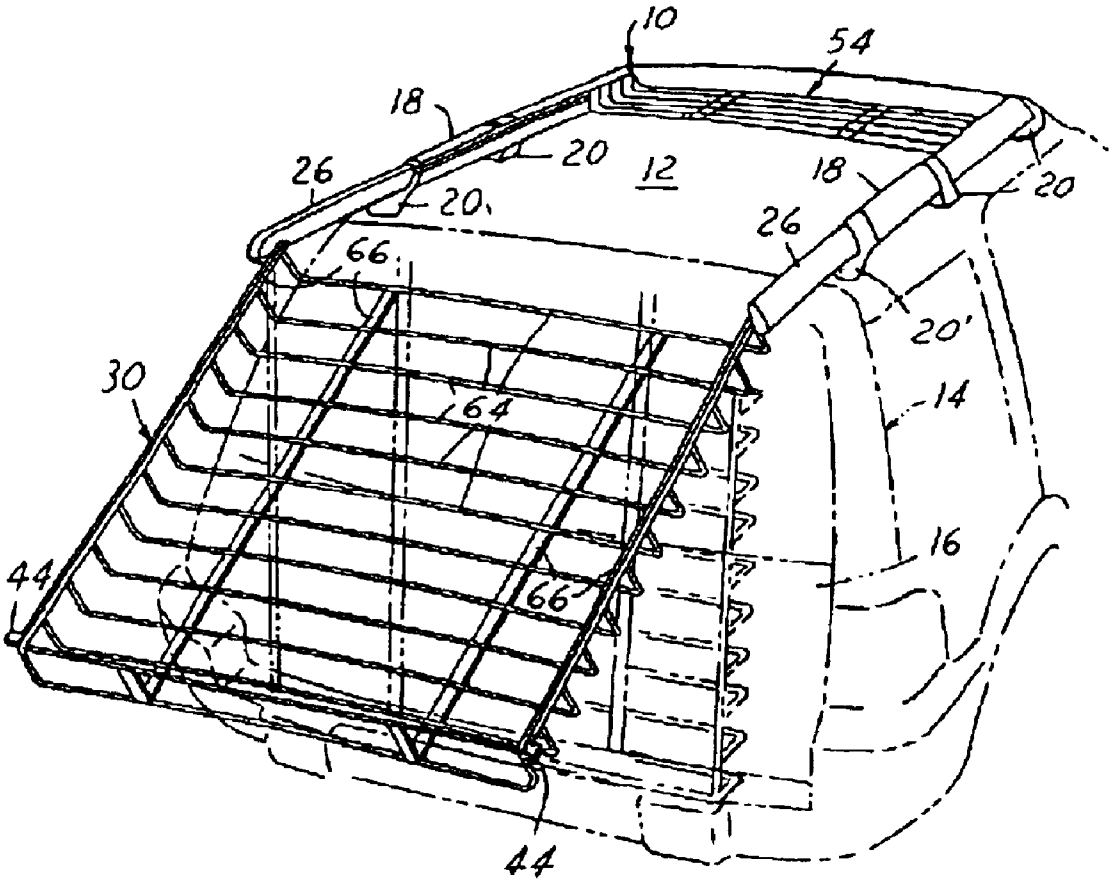

FIG. 3

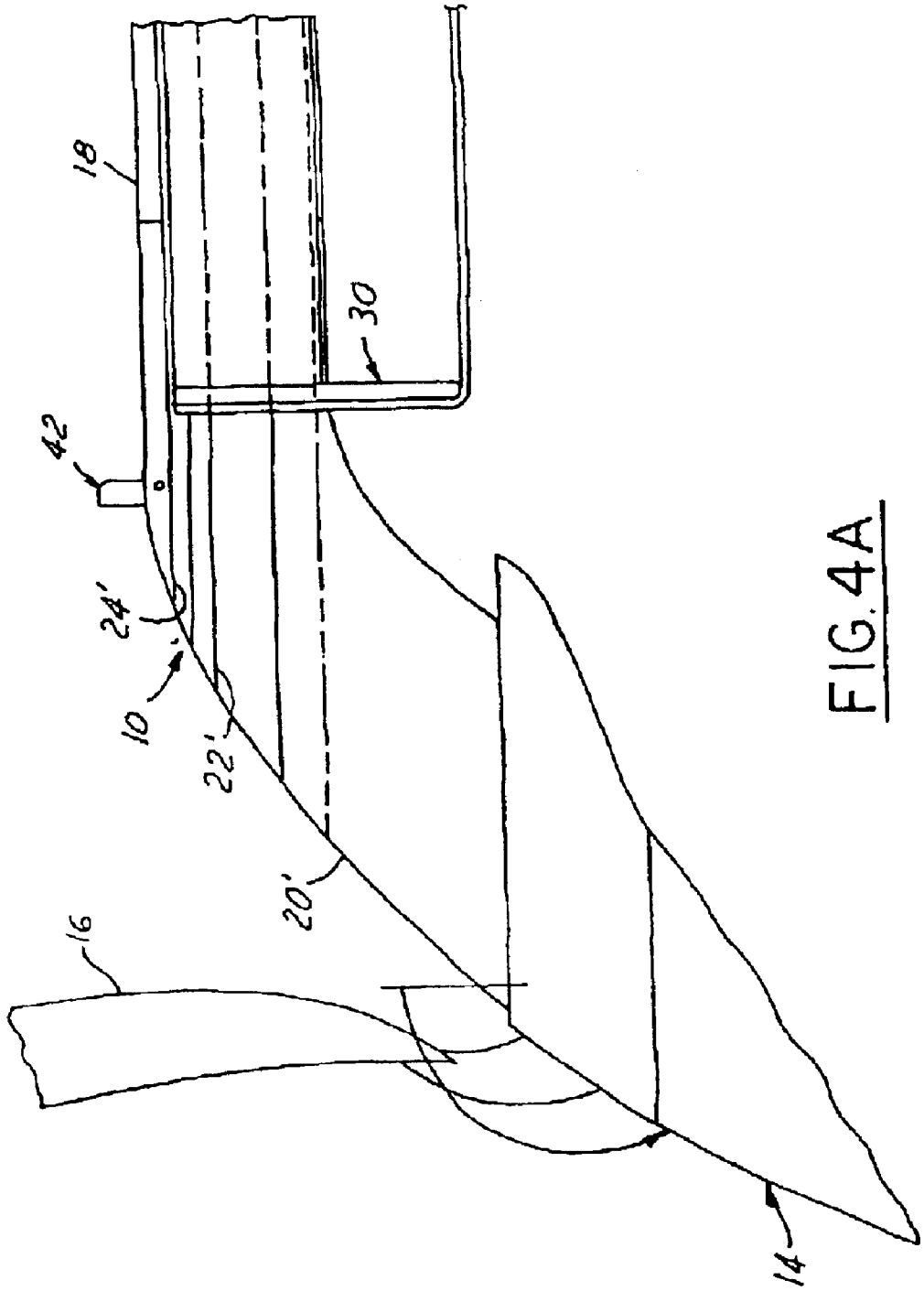

FIG. 4A

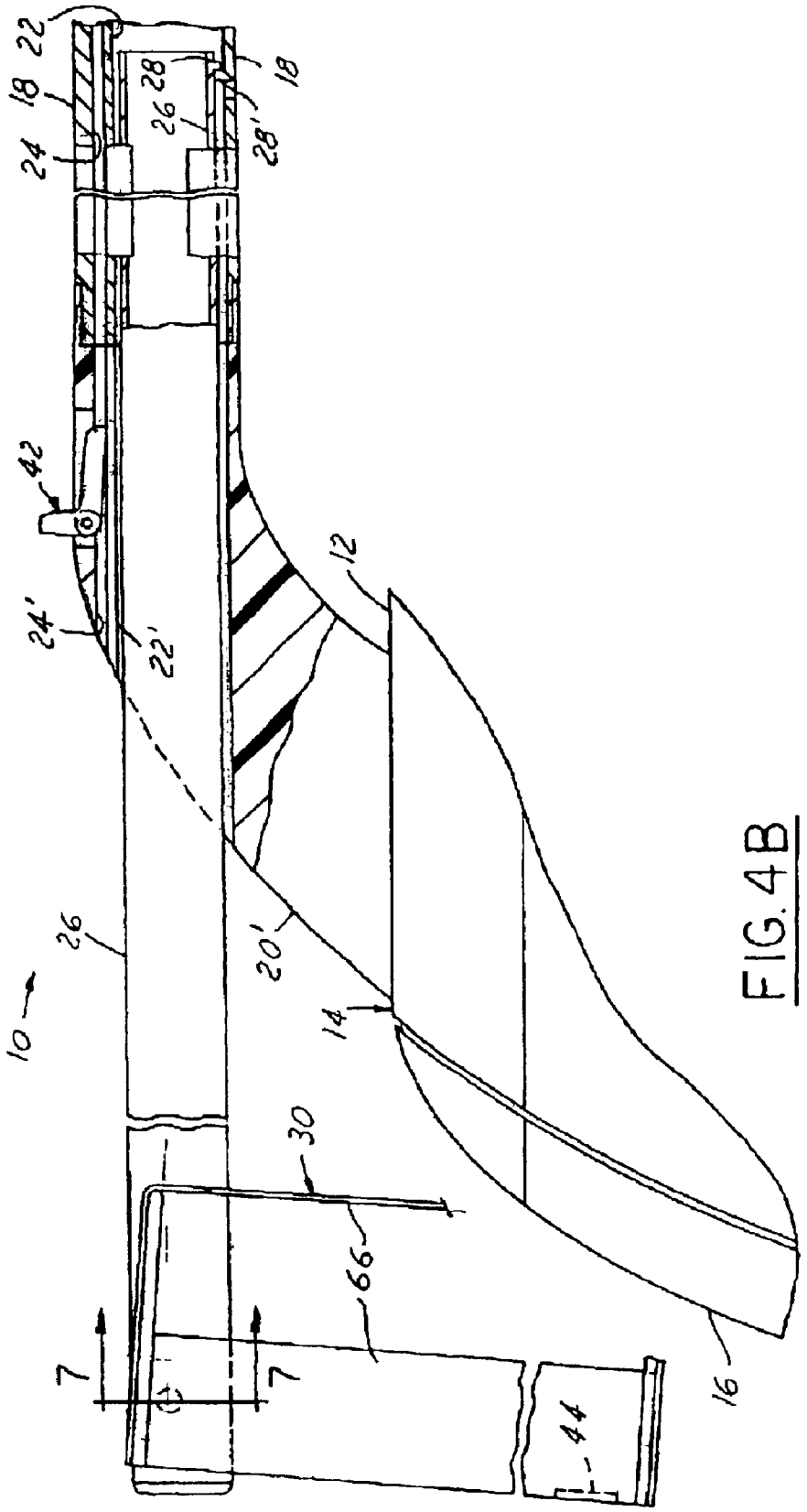

FIG. 4B

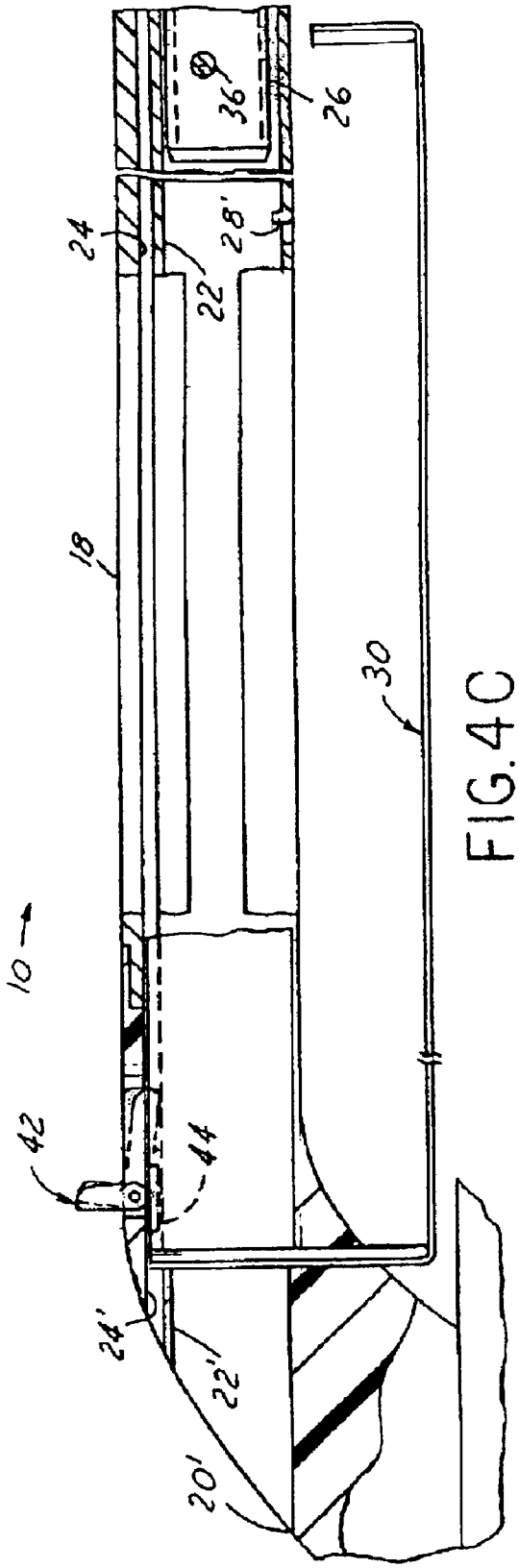

FIG.4C

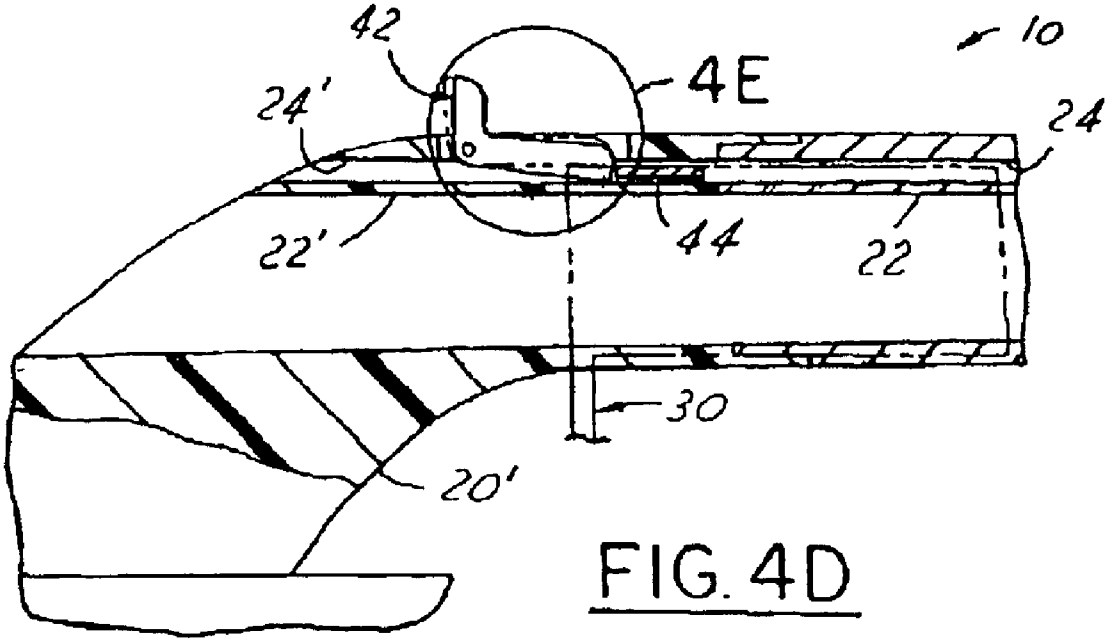

FIG. 4D

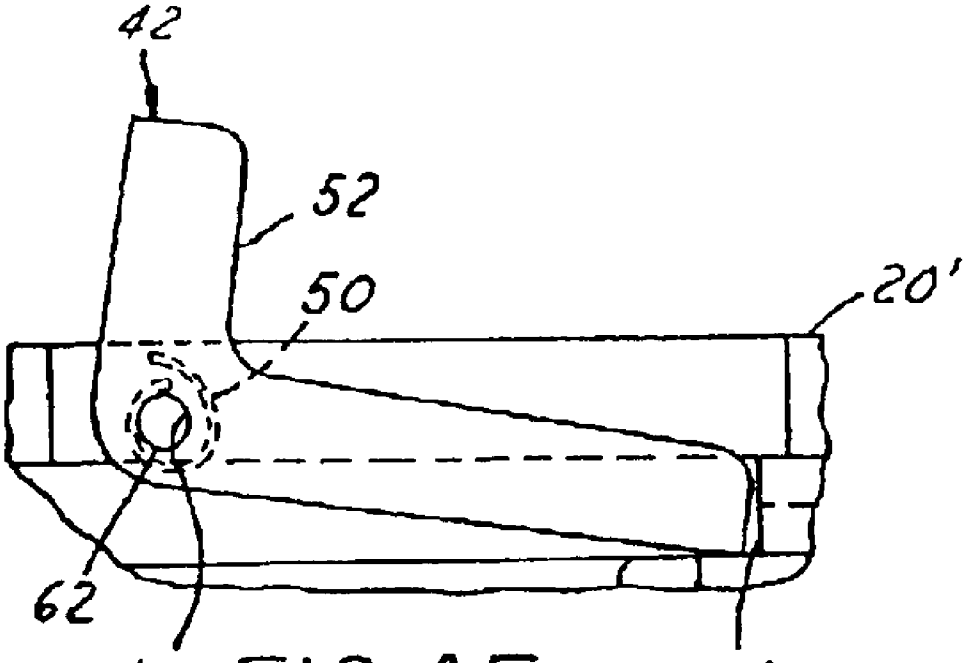

FIG. 4E

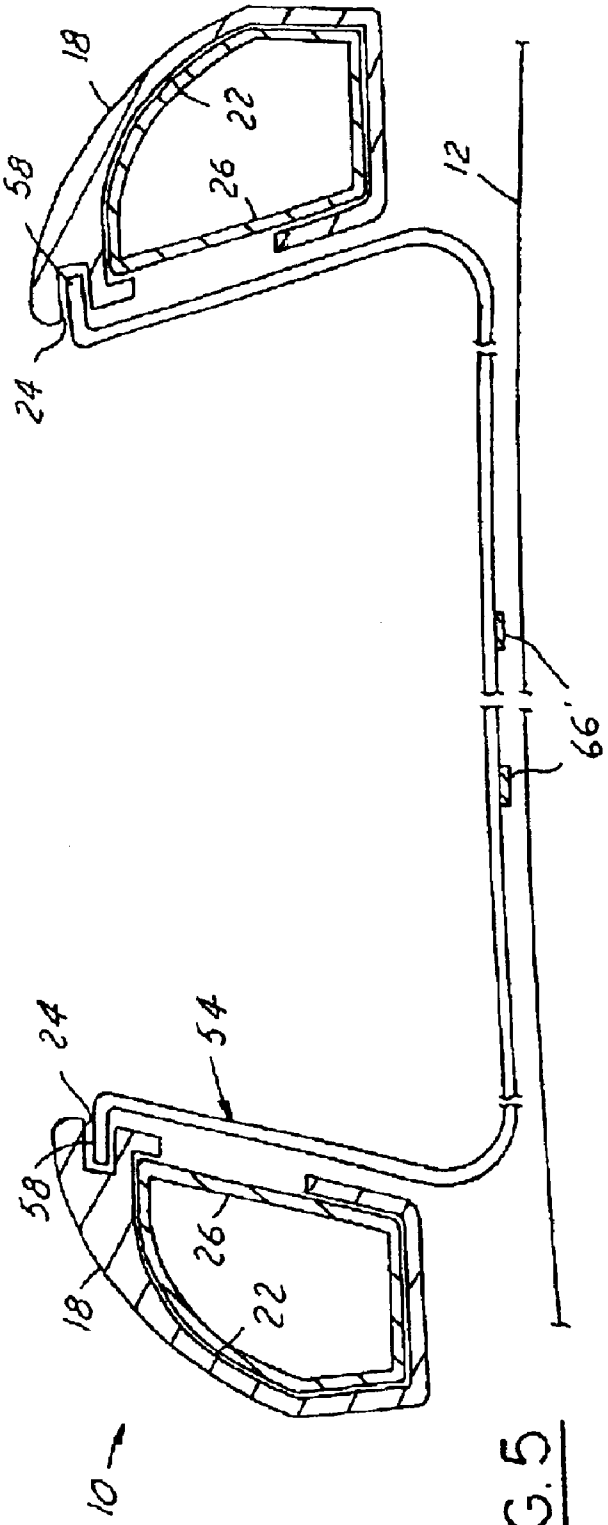

FIG. 5

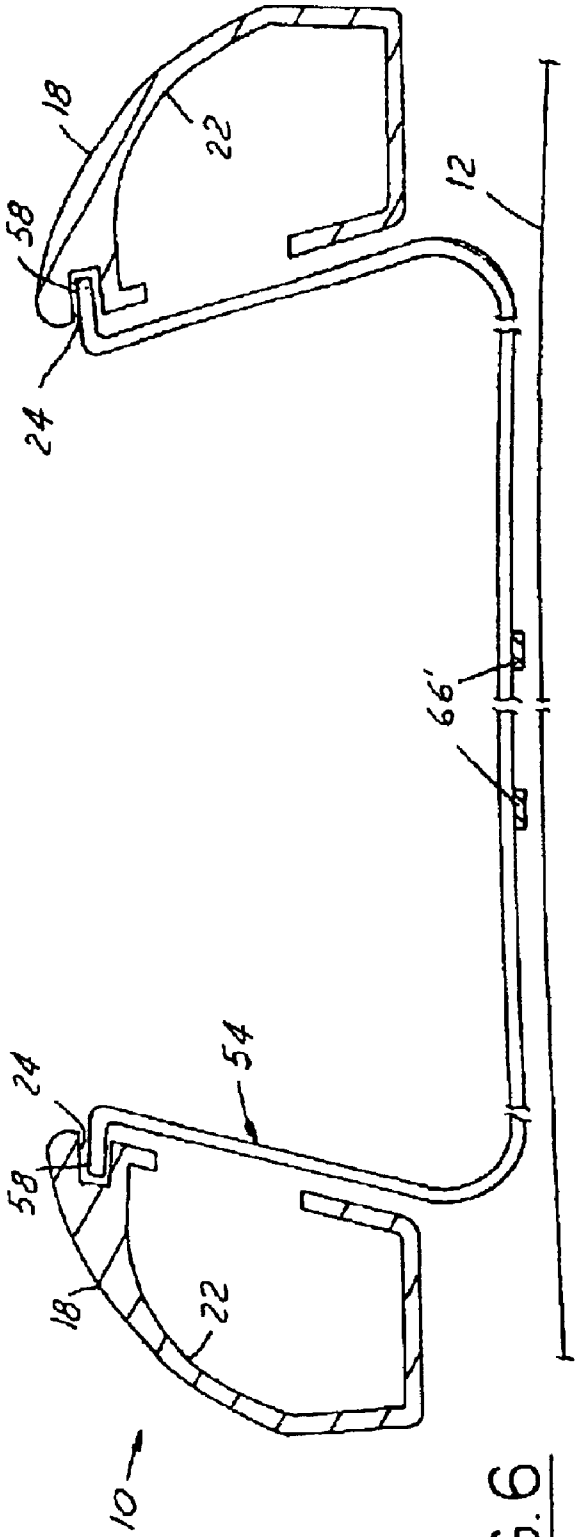

FIG. 6

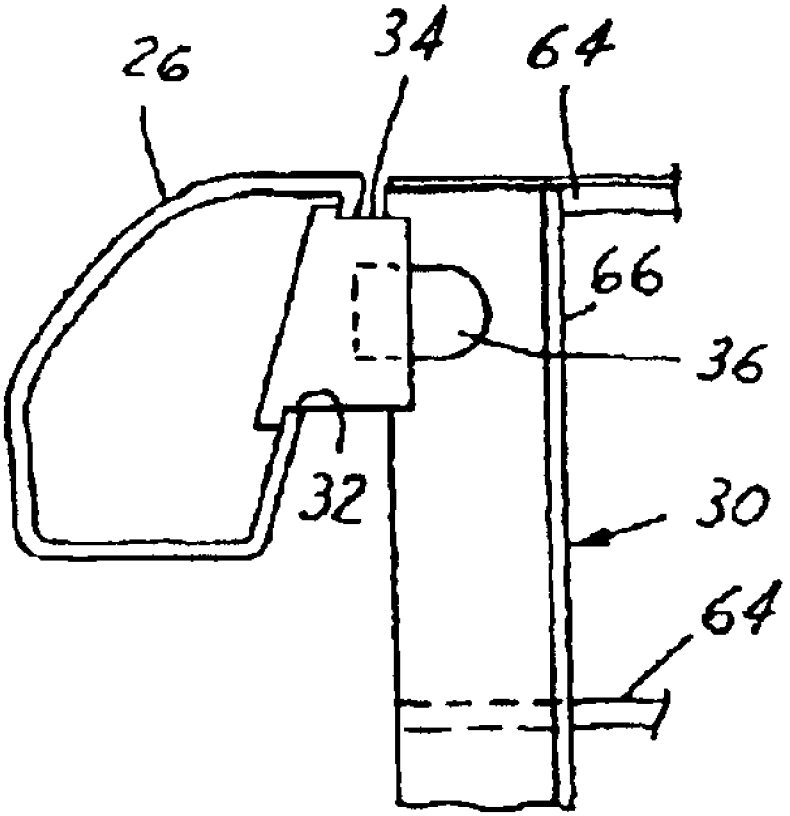

FIG. 7

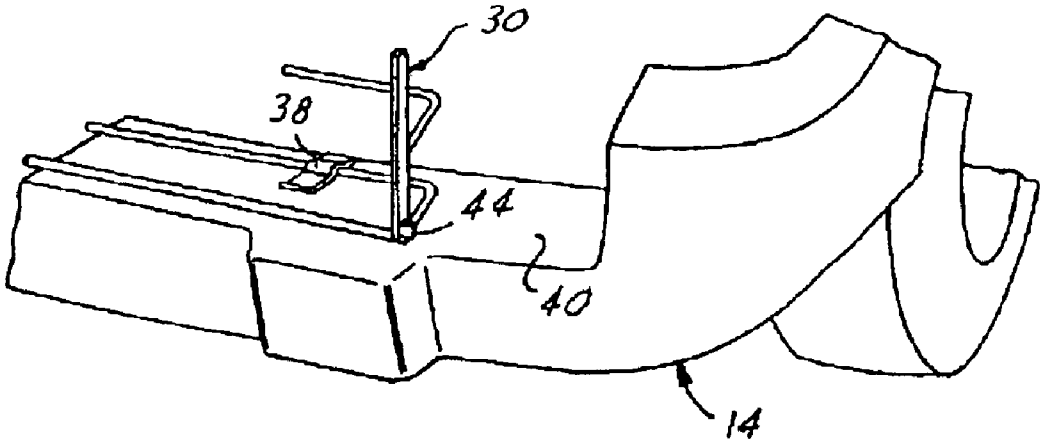

FIG. 8

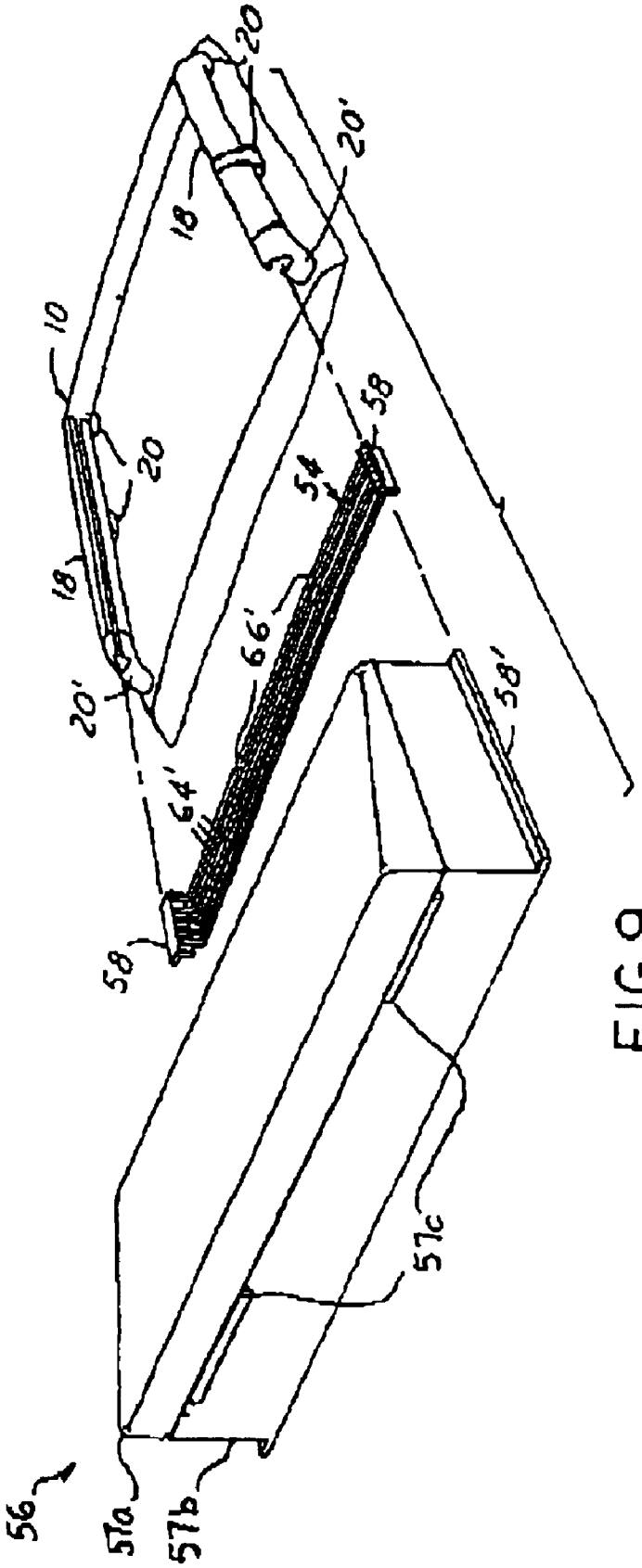

FIG. 9

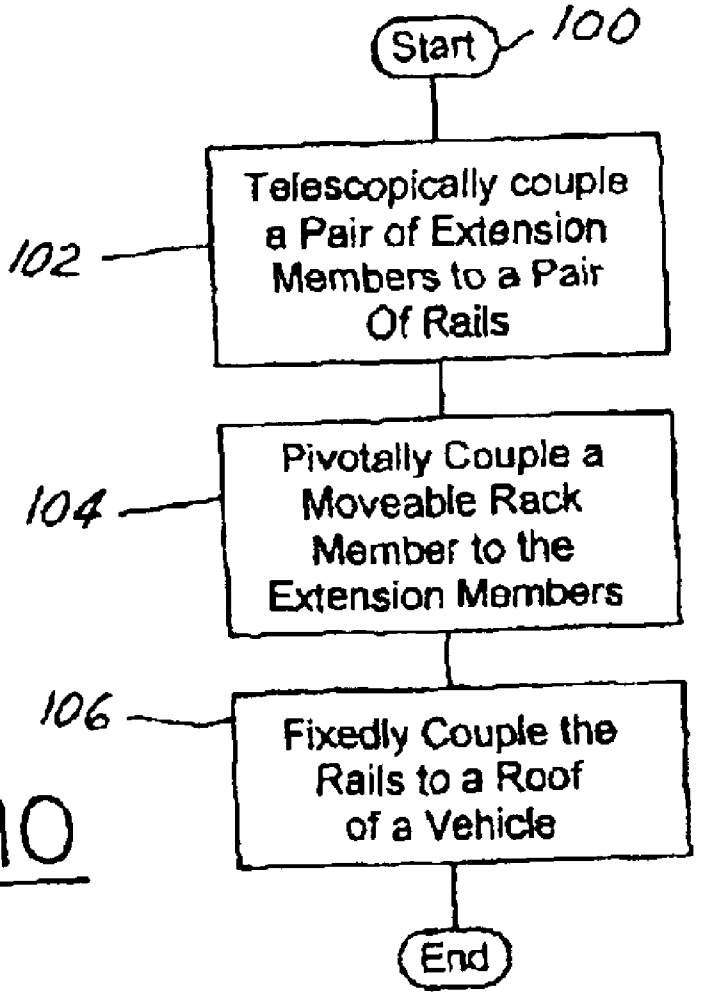
Start
100
Telescopically couple a Pair of Extension Members to a Pair Of Rails
102
Pivotally Couple a Moveable Rack Member to the Extension Members
104
Fixedly Couple the Rails to a Roof of a Vehicle
106
End

FIG. 10

TELESCOPING ROOF BASKET ASSEMBLY FOR A VEHICLE

BACKGROUND OF INVENTION

The present invention relates generally to vehicles, and more particularly to roof rack assemblies for vehicles.

Roof rack assemblies for securing various objects to the roofs of vehicles are well known. Typical roof rack assemblies are carrier frames fixedly attached to the roof. The roofs of many vehicles, i.e. sport utility vehicles, can be located at a relatively tall height from the ground and therefore are difficult to reach. In this regard, it may be somewhat cumbersome for an individual to lift an item over his head, place it onto the roof of the vehicle, and secure it to the roof rack assembly.

A proposed solution that allows objects to be more easily mounted to a roof of a vehicle is disclosed in U.S. Pat. No. 6,308,874 (hereinafter referred to as the '874 patent). The '874 patent discloses a roof rack assembly for use in combination with the roof of a vehicle and a rear portion of the vehicle. The roof rack assembly includes a pair of elongated support rails fixedly attached to the roof of the vehicle. The rails have a moveable rack member that is moveably coupled thereto. This rack member can be moved between a "roof-mounted" position in which the rack member is substantially parallel to the roof and a "back end-mounted" position in which the rack member is substantially parallel to the back end.

The elongated rails extend over the rear edge of the roof so as to allow the rack member to move between the "roof-mounted" position and the "back end-mounted" position without interference from the top rear edge of the vehicle.

A drawback of this roof rack assembly is that the rear ends of these elongated rails can interfere with the proper operation of a rear liftgate of the vehicle. Rear liftgates are typically integrated within sport utility vehicles and minivans. These liftgates ordinarily swing open or closed on two or more hinges that are located at the top rear edge of the vehicle. As mentioned above, the rails disclosed in the '874 patent extend over the edge of the roof. In this regard, the rails may obstruct the movement of the rear liftgate and prevent the rear liftgate from being fully opened. Moreover, if the liftgate were opened, the rails may damage the rear liftgate or the rear window integrated within the liftgate. Such results clearly are undesirable.

Another drawback of this roof rack assembly is that the construction of the moveable rack member typically lacks mounting structures that are positioned in a sufficient number of orientations. For example, the construction of the moveable rack member can be substantially planar. In this regard, the moveable rack member can lack mounting structures that extend substantially perpendicularly from the plane in which the remaining structure is primarily located.

Furthermore, the rack member can lack a sufficient quantity of mounting structures for securing cargo to the vehicle. For instance, the rack member can merely include a pair of elongated tube members and four traversing cross members attaching the tube members together.

For these reasons, an individual may be required to meticulously position an item on the rack member within a precise location for properly securing the item to the relatively few mounting structures of the rack member. Moreover, this construction may even completely prevent

smaller items from being mounted to the rack member. As a result, the construction of the rack member clearly is disadvantageous.

Therefore, it would be desirable to provide an easily accessible roof-mounted carrier assembly for permitting relatively easy attachment of various items thereon, as well as for utilizing the carrier assembly on a variety of vehicles, i.e. vehicles with rear liftgates.

SUMMARY OF INVENTION

The present invention provides a telescoping roof basket assembly for attachment to a roof of a vehicle. The basket assembly includes a pair of rails fixedly coupled to the roof of the vehicle. These rails are positioned substantially parallel to each other and generally along a longitudinal axis of the vehicle. Each rail defines a primary channel and a secondary channel. Furthermore, each primary channel has an extension bar slidably positioned therein and telescopically fitted to the rail. These extension bars are capable of being extended rearwardly from the rails. Moreover, these extension bars are pivotally coupled to a front end portion of a moveable basket member. This moveable basket member has a rear end portion with a pair of tabs extending therefrom. These tabs are intended for insertion into the secondary channels and securing the moveable basket member to the rails.

The telescoping roof basket assembly is moveable between a roof mounted position and a back end mounted position. In the roof mounted position, the moveable basket member is structured with a relatively small cross-section so as to create a low profile of the basket assembly and minimize drag imparted upon the vehicle. In addition, in the roof mounted position, the basket assembly is substantially parallel to the roof and is confined within a space directly above the roof. In the back end mounted position, the moveable basket member is substantially parallel to the back end of the vehicle.

One advantage of the present invention is that a telescoping roof basket assembly is provided that allows for unobstructed operation of a rear liftgate of the vehicle when the basket assembly is in a roof mounted position.

Another advantage of the present invention is that a moveable basket member is provided that includes a substantial quantity of mounting structures that are oriented in a substantial number of directions so as to facilitate the attachment of various shaped and various sized items thereon.

Yet another advantage of the present invention is that a telescoping roof basket assembly is provided that has a low profile structure and is positioned substantially close to the roof of the vehicle so as to minimize the drag forces imparted upon the vehicle.

Still another advantage of the present invention is that a telescoping roof basket assembly is provided that facilitates the loading and the unloading of various items to the roof of a vehicle.

Yet another advantage of the present invention is that a telescoping roof basket assembly is provided that has a secondary channel for securing a variety of modular components, i.e. a cargo carrier and a stationary basket member, thereto.

Other advantages of the present invention will become apparent when viewed in light of the detailed description of the invention when taken in conjunction with the attached drawings and appended claims.

BRIEF DESCRIPTION OF DRAWINGS

For a more complete understanding of this invention, reference should now be made to the embodiments illustrated in greater detail in the accompanying drawings and described below by way of examples of the invention:

FIG. **1** is a perspective view of a telescoping roof basket assembly that is attached to a roof of a vehicle and placed in a roof mounted position, according to one embodiment of the present invention.

FIG. **2** is a perspective view of the telescoping roof basket assembly, as shown in FIG. **1**, that is placed in a back end mounted position.

FIG. **3** is a perspective view of the telescoping roof basket assembly shown in FIGS. **1** and **2**, illustrating movement of the basket assembly between the roof mounted position and the back end mounted position.

FIG. **4**A is a side view of the telescoping roof basket assembly shown in FIG. **1**, as taken along line **4**A—**4**A, illustrating unrestricted operation of a rear liftgate of the vehicle.

FIG. **4**B is a partially cutaway view of the telescoping roof basket assembly shown in FIG. **2**, as taken along line **4**B—**4**B.

FIG. **4**C is a partially cutaway view of the telescoping roof basket assembly, illustrating the basket assembly being placed in the roof mounted position according to one embodiment of the present invention.

FIG. **4**D is a partially cutaway view of the telescoping roof basket assembly, illustrating the basket assembly being locked in the roof mounted position according to one embodiment of the present invention.

FIG. **4**E is a magnified view of the exemplary locking mechanism shown in FIG. **4**D, as taken within circle **4**E.

FIG. **5** is a cross-sectional view of the telescoping roof basket assembly shown in FIG. **1**, as taken along line **5**—**5**.

FIG. **6** is a cross-sectional view of the telescoping roof basket assembly shown in FIG. **2**, as taken along line **6**—**6**.

FIG. **7** is a partially cutaway view of a pivotal coupling between a moveable basket member and an extension bar shown in FIG. **4**B, taken along line **7**—**7**.

FIG. **8** is a perspective view of an exemplary fastener for holding a telescoping roof basket assembly in a back end mounted position, according to one embodiment of the present invention.

FIG. **9** is a perspective view illustrating the attachment of a stationary basket member and a cargo carrier to the rails of a telescopic roof basket assembly, according to one embodiment of the present invention; and.

FIG. **10** is a logic flow diagram representing a method for manufacturing a telescoping roof basket assembly, according to one embodiment of the present invention.

DETAILED DESCRIPTION

In the following figures, the same reference numerals are used to identify the same components in the various views.

Referring to FIGS. **1**–**3**, there are shown perspective views of a telescoping roof basket assembly **10** (hereinafter referred to as "basket assembly") that is moveable between a roof mounted position (as shown in FIG. **1**) and a back end mounted position (as shown in FIG. **2**). FIG. **3** generally illustrates the movement of the basket assembly **10** between the roof mounted position and the back end mounted position.

The movement of the basket assembly **10** between these two positions facilitates a user in securing various items to the roof **12** of a vehicle **14**. Specifically, a user can readily access the basket assembly **10** and secure items thereto when the basket assembly **10** is placed in the back end mounted position. With the basket assembly **10** in this position, the user can easily reach a substantial portion of the basket assembly **10** and secure an item thereon. In this regard, the user does not have to lift an item over his head, place it onto the roof, and reach around the roof to secure the item to the basket assembly **10**. Once all the items are secured to the basket assembly **10**, the user may move the basket assembly **10** to the roof mounted position.

As best shown in FIGS. **2** and **3**, the moveable basket member **30** is a basket-like storage unit. Specifically, this storage unit is comprised of a series of parallel bars **64** with two or more support bars **66** that are fixedly coupled to the parallel bars **64** and positioned generally perpendicular to the parallel bars **64**. Furthermore, the parallel bars **64** have end portions that extend substantially perpendicularly from the plane in which the center portions of the parallel bars are located. All of these bars **64**, **66** are intended to provide for a substantial number of attachment points for various gear-specific retaining systems, e.g. bike mounts and kayak mounts.

Preferably, the moveable basket member **30** is comprised of at least four metal support bars **66** with a series of metal parallel bars **64** welded thereto. However, it is understood that the moveable basket member **30** can be comprised of various other suitable materials as desired and have a variety of other suitable configurations.

As shown in FIGS. **1** and **4**A, in the roof mounted position, the basket assembly **10** is located in a discrete space directly above the roof **12** of the vehicle **14**. In other words, the basket assembly **10** does not obstruct a rear region of the vehicle **14**. A benefit of this construction is that the rear region can be freely utilized without interference from the basket assembly **10**. For example, the basket assembly **10** can permit a rear liftgate **16** of the vehicle **14** to swing fully open without striking a rear portion of the basket assembly **10**. However, it is also understood that the unobstructed rear region of the vehicle **14** can provide for a variety of other uses as desired.

Moreover, in the roof mounted position, the basket assembly **10** has a low profile and a substantially small cross-section (as best shown in FIG. **5**), which can decrease the amount of drag forces imparted upon the vehicle **14**.

In one embodiment of the invention, the basket assembly **10** includes a pair of rails **18** that are fixedly attached to the roof **12** of the vehicle **14**. These rails **18** are positioned substantially parallel to each other and generally along a longitudinal axis of the vehicle **14**. Moreover, the length of each rail **18** is confined to a space directly above the roof **12**. For this reason, no portion of the rail **18** protrudes into a space above or within a rear region of the vehicle **14**.

Furthermore, each rail **18** has one or more leg portions **20** extending therefrom for attaching the rail **18** to the roof **12**. However, it is understood that various other suitable structures may be utilized to attach the rails **18** to the roof **12**. Alternatively, the rails **18** themselves may be directly attached to the roof **12**.

Referring now to FIGS. **5** and **6**, there are shown cross-sectional views of the rails **18** shown, respectively, in FIGS. **1** and **2**, as taken along lines **5**—**5** and **6**—**6**. Each rail **18** defines a primary channel **22** and a secondary channel **24**. The secondary channel **24** is detailed in the descriptions for FIGS. **4**C–**4**E and **9**.

The primary channels **22** extend substantially across the length of the rails **18** and are sized for having extension bars **26** slidably disposed therein. The extension bars **26** are telescopically fitted to the rails **18** in order to allow the extension bars **26** to extend rearwardly from the rails **18**.

Referring now to FIG. **4**B, there is shown a partially cutaway view of the basket assembly **10** shown in FIG. **2**, as taken along line **4**B—**4**B. The front end portions of the extension bars **26** and the rear end portions of the rails **18** have opposing detent flanges **28**, **28**' for preventing the extension bars **26** from being completely extracted from the primary channels **22** of the rails **18**. These flanges **28**, **28**' are sections of the extension bars **26** and the rails **18** that are respectively bent radially outwardly and inwardly. One skilled in the art will understand that a variety of other suitable detent couplings or anti-separation mechanisms may provide for a telescopic fitting between the extension bars **26** and the rails **18**.

Referring now to FIGS. **4**B and **7**, the rear end portions of these extension bars **26** are pivotally coupled to a front end portion of a moveable basket member **30**. Specifically, each extension bar **26** has a hole **32** integrally formed therein with a bushing **34** secured to the extension bar **26** within the hole **32**. This bushing **34** is intended to receive a mandrel **36** extending laterally outward from the moveable basket member **30**. This construction permits the moveable basket member **30** to pivot about its mandrels **36** between a substantially horizontal position and a substantially vertical position.

Each mandrel **36** is an integral part of the moveable basket member **30**. Alternatively, the mandrels can be separate components that are attached to the moveable basket member **30**. Moreover, it is understood that a variety of other suitable mechanisms may be utilized for providing the pivotal coupling between the moveable basket member **30** and the extension bars **26**.

Referring now to FIG. **8**, there is shown an exemplary fastener **38** for securing the basket assembly **10** to a vehicle **14** in a back end mounted position, in accordance with one embodiment of the invention. This fastener **38** is fixedly attached to the vehicle **14** adjacent to a rear bumper **40** of the vehicle **14**. The fastener **38** is a resilient clip for receiving a rear portion of the moveable basket member **30**. However, one skilled in the art will understand that a variety of other suitable fasteners may be utilized as desired.

Referring now to FIGS. **4**C–**4**E, there is shown partially cutaway views illustrating the operation of an exemplary locking mechanism **42** for selectively locking the moveable basket member **30** in the roof mounted position and releasing the basket member **30** therefrom. Specifically, the moveable basket member **30** has a rear end portion with a pair of tabs **44** extending laterally outward therefrom. These tabs **44** are intended for insertion into the secondary channels **24** of the rails **18** for the purpose of selectively engaging the locking mechanism **42** and preventing the moveable basket member **30** from sliding rearward and out of the rails **18**. However, it is understood that the moveable basket member **30** may have additional tabs, a continuous ledge, or other suitable protrusions for insertion into the secondary channel **24**.

Additionally, the tabs **44** are also intended to support the moveable basket member **30** in a substantially upright direction. In this regard, in the roof mounted position, the moveable basket member **30** is supported by the tabs **44** in its rear end portion and by the mandrels **36** in its front end portion. However, it is understood that the basket member **30** can be supported by a variety of support members as desired.

The locking mechanism **42** is integrated within a secondary channel **24**' of a rear leg portion **20**'. However, it is understood that the locking mechanism **42** may instead be integrated within the secondary channel **24** of the rail **18** as desired.

The locking mechanism **42** is an L-shaped bracket **48** with an opening **46** integrally formed therein for receiving a pin **62** and pivotally coupling the bracket **48** to the rail **18**. In addition, a spring **50** is coupled between the rail **18** and the bracket **48** so as to bias the bracket **48** to close the secondary channel **24**. A user may selectively release the moveable basket member **30** from the roof mounted position by pressing a lever portion **52** of the bracket **48** and pulling the moveable basket member **30** rearwardly. As a result, the tabs **44** may pass beyond the locking mechanism **42** and the moveable basket member **30** can be pulled out rearwardly from the rails **18**.

Referring now primarily to FIGS. **5**, **6**, and **9**, the secondary channel **24** is intended to secure a variety of modular components, e.g. a stationary basket member **54** and a cargo carrier **56**, to the rails **18**. This secondary channel **24** does not overlap the primary channel **22** and therefore permits the modular components to remain in position as the moveable basket member **30** is moved between the roof mounted position and the back end mounted position. In this respect, the secondary channel **24** is independent from the primary channel **22**.

The stationary basket member **54** preferably has a similar construction as the moveable basket member **30** for the purpose of allowing a variety of different shaped and different sized items to be mounted on the stationary basket member **54**. Specifically, the stationary basket member **54** is a basket-like storage unit including four support bars **66**' with a series of parallel bars **64**' attached to the support bars **66**'. However, it is understood that the stationary basket member **54** can have various other suitable configurations as desired.

Furthermore, this stationary basket member **54** includes a pair of ledges **58** that are intended to be inserted into the secondary channels **24**. In this regard, a user can attach the stationary basket member **54** to the front end portion of the basket assembly **10** by first inserting the ledges **58** into the secondary channel **24** at the rear end portion of the basket assembly **10** and then sliding the stationary basket member **54** to the front end portion of basket assembly **10**.

Additionally, the stationary basket member **54** can be utilized for complementing the moveable basket member **30** and providing a continuous additive length to the basket assembly **10**. This continuous additive length allows lengthy items to be secured to the basket assembly.

For example, the stationary basket member **54** can be sized one third the length of the basket assembly **10**, and the moveable basket member **30** can be sized two thirds the length of the basket assembly **10**. In view of this construction, an item, such as a kayak, that is sized the length of the basket assembly **10** can be first secured to the moveable basket member **30** when the basket assembly **10** is in the back end mounted position. Then, once the basket assembly **10** is moved to the roof mounted position, the item can be secured to the stationary basket member **54**.

It is understood that the moveable basket member **30** and the stationary basket member **54** allow for a modular arrangement of the basket assembly **10**. For example, the lengths of the stationary basket member **54** and the moveable basket member **30** can vary as desired. In addition, according to another example, the basket assembly **10** may

completely replace the moveable basket member **30** with a stationary basket member **54** that is sized the length of the basket assembly **10**. According to yet another example, the basket assembly **10** may replace the moveable basket member **30** with two stationary basket members **54** that together are sized the length of the basket assembly **10**. According to still another example, the basket assembly **10** may replace the stationary basket member **54** with a moveable basket member **30** that is sized the length of the basket assembly **10**. Despite all of the above examples, it is understood that the basket assembly **10** can have a variety of other suitable configurations as desired.

As introduced above and shown in FIG. **9**, the cargo carrier **56** is another example of a modular component for attachment to the secondary channels **24** of the rails **18**. The cargo carrier **56** has a pair of protrusions **58'** for insertion into the secondary channels **24** and coupling the carrier **56** to the rails **18** of the basket assembly **10**. However, it is understood that the carrier **56** may instead be secured to the moveable basket member **30** by cords or other mounting devices as desired.

This cargo carrier **56** is a two-piece construction that includes a lid portion **57***a* and a base portion **57***b*. The lid portion **57***a* is pivotally coupled to the base portion **57***b* by a suitable hinge mechanism **57***c*. The base portion **57***b* preferably has the protrusions **58'** extending therefrom. However, it is understood that a variety of other suitable constructions of the carrier **56** can be utilized as desired.

In operation, the basket assembly **10** is moveable from the roof mounted position to the back end mounted position by first disabling the locking mechanism so as to permit the basket member **30** to move rearward. Thereafter, the moveable basket member **30** is pulled rearward, as well as the extension bars **26** attached to the basket member **30**. In this respect, the basket member **30** and the extension bars **26** extend into the rear region of the vehicle **14** beyond the space directly above the roof of the vehicle **14**. The extension bars **26** reach a limit of rearward movement when the detent flanges **28** integrated thereon engage opposing detent flanges **28'** integrated on the rails **18**. Then, the moveable basket member **30** is pivoted about its mandrels **36** that are coupled to the extension bars **26**. This movement allows the basket member **30** to be secured to the fastener **38** on the rear bumper **40** and to position the basket member **30** substantially parallel to the back end of the vehicle **14**.

Referring now to FIG. **10**, there is shown a logic flow diagram illustrating a method for manufacturing a telescoping roof basket assembly **10** according to one embodiment of the present invention. The method begins at step **100** and then immediately proceeds to step **102**.

In step **102**, a pair of extension bars **26** are telescopically fitted to a pair of rails **18**. This step may be accomplished by inserting the extension bars **26** into a pair of primary channels **22** integrally formed within the rails **18**, which are sized for receiving the extension bars **26**. Specifically, the extension bars **26** can be inserted into front end portions of the rails **18** through the length of the rails **18** until opposing detent flanges integrated on the rails **18** and the extension bars **26** prevent further rearward movement. Thereafter, the front end portions of the rails **18** may be enclosed by a leg portion **20** or other suitable cover for preventing the extension bars **26** from exiting the rails **18**. However, one skilled in the art will understand that the telescopic fitting may be accomplished by other suitable methods as desired. Then, the sequence proceeds to step **104**.

In step **104**, a front end portion of a moveable basket member **30** is pivotally coupled to the rear end portions of the extension bars **26**. This step may be accomplished by inserting mandrels **36** extending laterally outward from the basket member **30** into bushings **34** that are coupled to the extension bars **26**. However, it is understood that a variety of other suitable pivotal couplings may be utilized as desired. Then the sequence proceeds to step **106**.

In step **106**, the pair of rails **18** are fixedly coupled to a roof **12** of the vehicle **14**. These rails **18** may be attached to the roof **12** by two or more leg portions **20** extending downward from the rails **18**. Alternatively, the rails **18** themselves may be directly attached to the roof **12**. However, it is understood that the rails **18** may be attached to the roof by various other suitable methods.

While particular embodiments of the invention have been shown and described, numerous variations and alternate embodiments will occur to those skilled in the art. Accordingly, it is intended that the invention be limited only in terms of the appended claims.

What is claimed is:

1. A telescoping roof basket assembly of for a vehicle, comprising:

a pair of rails fixedly coupled to a vehicle roof, said pair of rails having a pair of primary channels and a pair of secondary channels formed therein, said pair of primary channels extending substantially across a length of said pair of rails;

a stationary basket member having a pair of ledges extending therefrom for inserting into said pair of secondary channels, said pair of ledges for coupling said stationary basket member to said pair of rails;

a pair of extension bars telescopically coupled to said pair of rails, said pair of extension bars being slidable within said pair of primary channels substantially across said length of said pair of rails and rearwardly therefrom;

a moveable basket member having a front end portion and a rear end portion, said front end portion being pivotally coupled to said pair of extension bars, said rear end portion having at least one tab extending therefrom for inserting into said pair of secondary channels and coupling said moveable basket to said pair of rails;

wherein the telescoping roof basket assembly is moveable between a roof mounted position and a back end mounted position;

wherein the telescoping roof basket assembly in said roof mounted position includes said stationary basket member and said moveable basket member comprising a substantially continuous additive length, said continuous additive length for mounting an elongated item to the telescoping roof basket assembly.

2. The telescoping roof basket assembly of claim **1** wherein said moveable basket member is substantially straight thereby providing the telescoping roof basket assembly with a low profile when the telescoping roof basket assembly is in said roof mounted position.

3. The telescoping roof basket assembly of claim **1** wherein said pair of rails has a first pair of detents extending into said pair of primary channels, said first pair of detents for engaging said pair of extension bars and preventing said pair of extension bars from extending further rearwardly from said pair of rails.

4. The telescoping roof basket assembly of claim **3** wherein said pair of extension bars has a second pair of detents extending therefrom for engaging said first pair of detents and preventing said pair of extension bars from extending further rearwardly.

5. The telescoping roof basket assembly of claim **1** further comprising:

a plurality of leg portions for coupling said pair of rails to said roof, said plurality of leg portions including a rear pair of leg portions with a first pair of channels and a second pair of channels formed therein, said first pair of channels being aligned with said pair of primary channels and said second pair of channels being aligned with said pair of secondary channels.

6. The telescoping roof basket assembly of claim **5** further comprising:

a locking mechanism coupled to at least one of:

said pair of rails within one of said secondary channels; and

said rear pair leg portions within said second pair of channels;

wherein said locking mechanism is intended to engage one of said pair of tabs extending from said moveable basket member and to secure said moveable basket member in said roof mounted position.

7. The telescoping roof basket assembly of claim **5** wherein said locking mechanism comprises a spring-loaded locking mechanism coupled to one of:

said pair of rails within one of said secondary channels; and

said rear pair leg portions within said second pair of channels.

8. The telescoping roof basket assembly of claim **6** wherein said spring-loaded locking mechanism comprises a bracket that is coupled to a biasing member, said biasing member biasing said bracket to a closed position so as to prevent rearward movement of one if said pair of tabs and to secure the moveable rack member in said roof mounted position.

9. The telescoping roof basket assembly of claim **1** further comprising a modular component for attachment to said pair of rails via said pair of secondary channels.

10. The telescoping roof basket assembly of claim **1** wherein said continuous additive length said stationary basket member and said moveable basket member is substantially equal to said length of said pair of rails.

11. A telescoping roof basket assembly of for a vehicle, comprising:

a pair of rails fixedly coupled to a vehicle roof, said pair of rails having a pair of primary channels and a pair of secondary channels formed therein, said pair of primary channels extending substantially across a length of said pair of rails;

a stationary basket member having a pair of ledges extending therefrom for inserting into said pair of secondary channels, said pair of ledges utilized for coupling said stationary basket member to said pair of rails;

a pair of extension bars telescopically coupled to said pair of rails, said pair of extension bars being slidable within said pair of primary channels substantially across said length of said pair of rails and rearwardly therefrom;

a moveable basket member having a front end portion and a rear end portion, said front end portion being pivotally coupled to said pair of extension bars, said rear end portion having at least one tab extending therefrom for inserting into said pair of secondary channels and coupling said moveable basket to said pair of rails; and

at least one modular component having a pair of protrusions for inserting into said pair of secondary channels and coupling said at least one modular component to said pair of rails;

wherein the telescoping roof basket assembly is moveable between a roof mounted position and a back end mounted position;

wherein the telescoping roof basket assembly in said roof mounted position includes said stationary basket member and said moveable basket member comprising a substantially continuous additive length, said continuous additive length for mounting an elongated item to the telescoping roof basket assembly.

12. The telescoping roof basket assembly of claim **11** wherein said continuous additive length of said stationary basket member and said moveable basket member is substantially equal to said length of said pair of rails.

13. The telescoping roof basket assembly of claim **11** wherein said at least one modular component comprises a cargo carrier, said cargo carrier comprising a base portion and a lid portion pivotally coupled to said base portion.

14. The telescoping roof basket assembly of claim **13** wherein said base portion of said cargo carrier has a pair of protrusions extending therefrom, said pair of protrusions for inserting into said pair of secondary channels and coupling said cargo carrier to said pair of rails.

15. The telescoping roof basket assembly of claim **11** wherein said pair of rails has a first pair of detente extending into said pair of primary channels, said first pair of detente for engaging said pair of extension bars and preventing said pair of extension bars from extending further rearwardly from said pair of rails.

16. The telescoping roof basket assembly of claim **11** wherein said pair of extension bars has a second pair of detents extending therefrom for engaging said first pair of detents and preventing said pair of extension bars from extending further rearwardly.

17. The telescoping roof basket assembly of claim **11** further comprising:

a plurality of leg portions for coupling said pair of rails to said roof, said plurality of leg portions including a mar pair of leg portions with a first pair of channels and a second pair of channels formed therein, said first pair of channels being aligned with said pair of primary channels and said second pair of channels being aligned with said pair of secondary channels.

18. The telescoping roof basket assembly of claim **11** further comprising:

a locking mechanism coupled to at least one of:

said pair of rails within one of said secondary channels; and

said rear pair leg portions within said second pair of channels;

wherein said locking mechanism is intended to engage one of said pair of tabs extending from said moveable basket member and to secure said moveable basket member in said roof mounted position.

* * * * *