United States Patent

Payne

[15] **3,683,966**

[45] **Aug. 15, 1972**

[54] **THREE POSITION VALVE**

[72] Inventor: **Vivian Hershel Payne**, Houston, Tex.

[73] Assignee: **Offshore Systems Inc.**, Houston, Tex.

[22] Filed: **April 2, 1970**

[21] Appl. No.: **25,104**

[52] **U.S. Cl.** **137/625.48**

[51] **Int. Cl.** **F16k 11/02**

[58] **Field of Search** ...137/625.48; 251/31, 177, 178, 251/186; 92/6, 52

[56] **References Cited**

UNITED STATES PATENTS

3,302,535	2/1967	Procter et al.	92/52
3,020,927	2/1962	McLaughlin	137/625.48 X
1,314,559	9/1919	Wilson	251/178 X
3,349,800	10/1967	Herion et al.	137/625.48 X
2,628,608	2/1953	Loecy	92/52 X
2,745,429	5/1956	Crookston	251/31 X
3,057,163	10/1962	Alping	92/52
3,152,520	10/1964	Heese	92/52
2,560,841	7/1951	Bishop	137/625.48

FOREIGN PATENTS OR APPLICATIONS

1,110,970	7/1961	Germany	251/31
565,012	11/1932	Germany	137/625.48

Primary Examiner—Samuel Scott

Attorney—Marvin B. Eickenrodt, Robert W. Turner and Jennings B. Thompson

[57] **ABSTRACT**

A valve wherein an inlet is connected to either of two outlets alternatively, or to neither of the outlets, in accordance with the relationship between a pilot pressure and an operational pressure.

9 Claims, 3 Drawing Figures

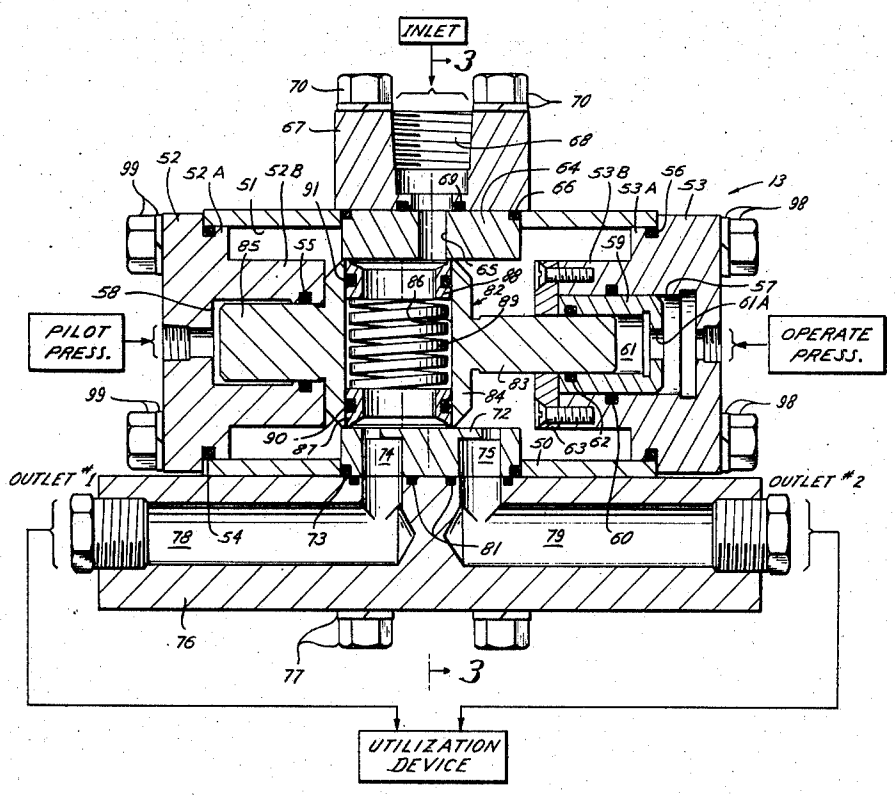

Patented Aug. 15, 1972 3,683,966

2 Sheets-Sheet 1

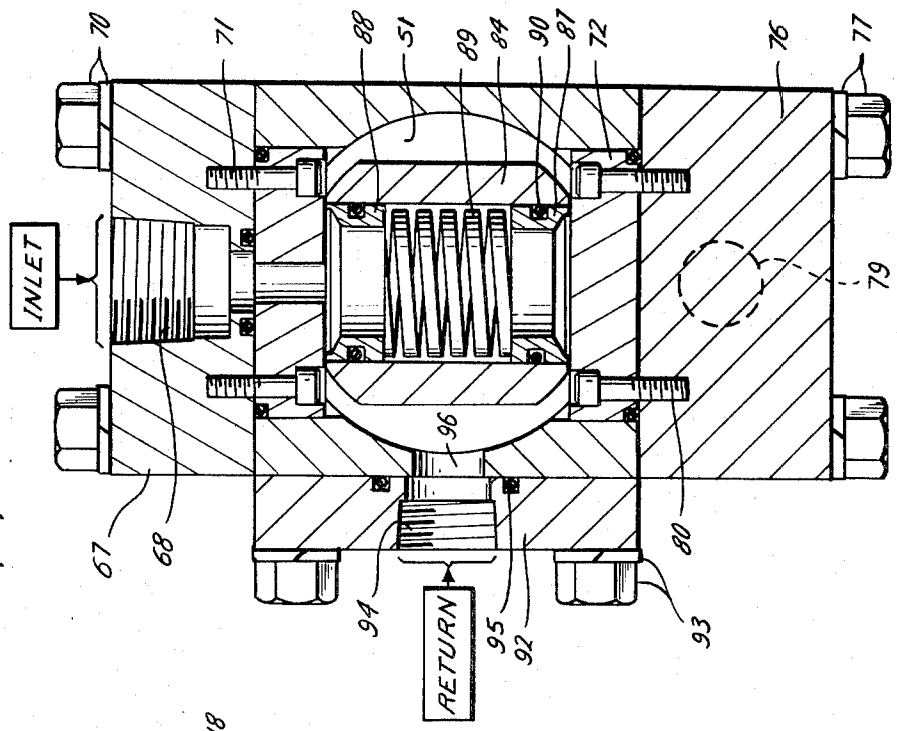

Fig. 3

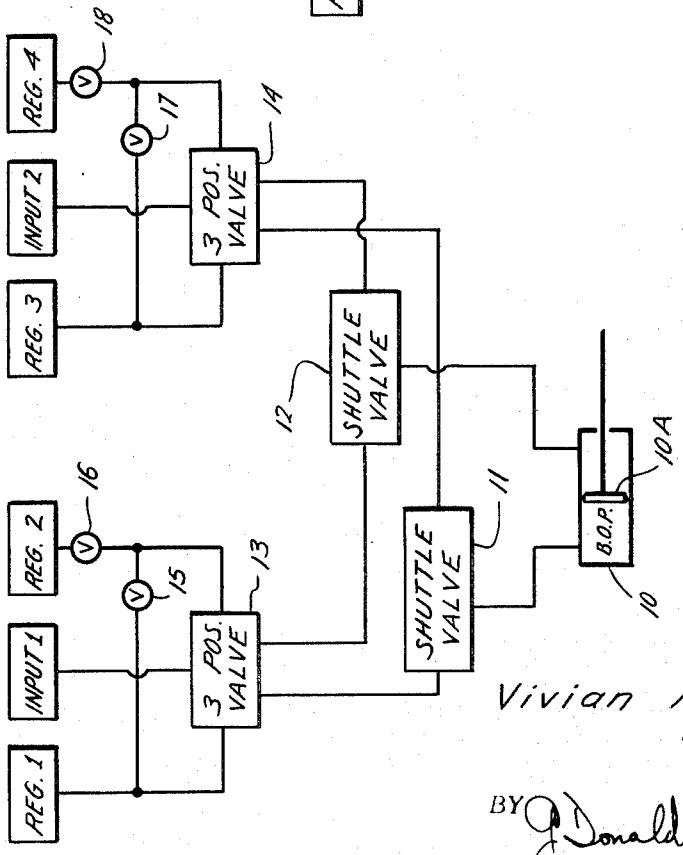

Fig. 1

Vivian H. Payne
INVENTOR

BY J. Donald Weber
ATTORNEY

Patented Aug. 15, 1972 3,683,966

2 Sheets-Sheet 2

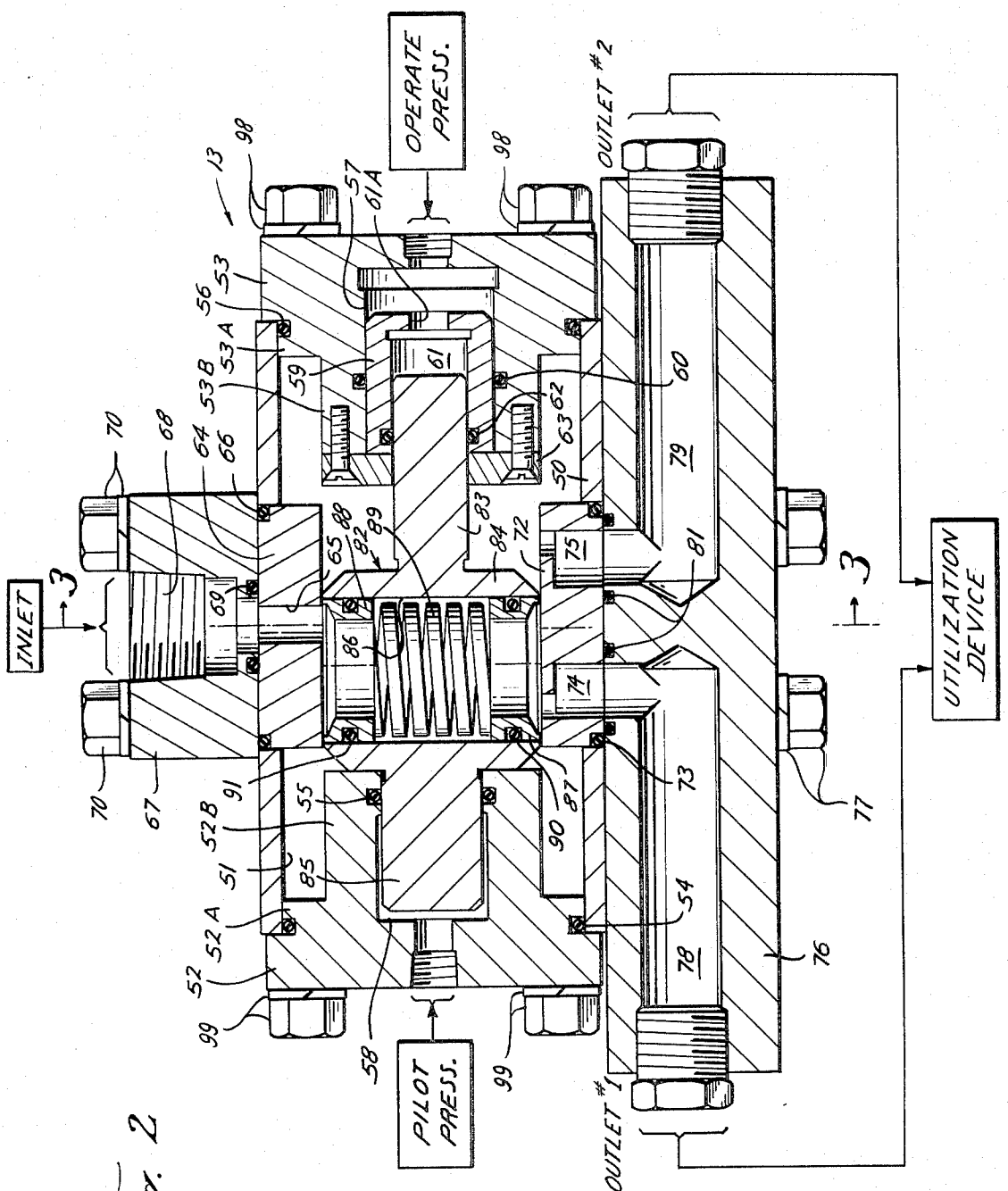

Fig. 2

Vivian H. Payne
INVENTOR.

BY J. Donald Weber Jr.
ATTORNEY

THREE POSITION VALVE

BACKGROUND

The valve which forms the basis of the subject invention has general application to offshore oilwell operation. However, the subject valve has other applications as well. The subject valve was developed for use in the offshore area especially due to the hostile environment and the hazardous operating conditions. More specifically, due to the hazardous nature of petroleum production in general and offshore production in particular, many drilling contractors specify that redundant type controls for blowout preventers and the like be supplied in the drilling equipment. In the past, the redundant controls at the subsurface location have required extensive duplication of expensive and critical equipment. The subject valve eliminates some of the duplication of parts without any reduction in safety.

The subject valve permits a BOP or the like to be controlled by two separate control systems at the surface. The control is effected such that any malfunction in either of the control systems can be eliminated and the malfunctioning part of the control system brought to the surface for repair without interrupting operation of the production equipment.

SUMMARY OF THE INVENTION

The valve which forms the subject of this invention includes a sliding piston which selectively interconnects a single inlet with either one of two outlets alternatively or with neither of the outlets. Thus, the inlet can be effectively blocked from communicating with either one or both of the outlets.

The valve selectively interrupts or controls fluid flow in the hydraulic control line in which it is inserted. The piston is positioned as a function of the relationship between an operational pressure which is applied by one source and a pilot pressure or reference pressure which is applied by another source. The relative pressures and the configuration of the piston selectively control the location and operation of the piston relative to the inlet and outlet ports.

The outlet ports are so arranged that when the piston is in the blocked condition, neither of the outlet ports communicate with the inlet port or the other outlet port.

DESCRIPTION OF THE DRAWINGS

FIG. 1 is a schematic block diagram of a system wherein the instant valve is utilized;

FIG. 2 is a cross-sectional side view of the valve which forms the instant invention; and

FIG. 3 is a cross-sectional end view of the valve shown in FIG. 2.

DESCRIPTION OF THE PREFERRED EMBODIMENT

Referring now to FIG. 1, there is shown a schematic block diagram of a system wherein the subject valve is utilized. Typically, the system may be a hydraulic system wherein hydraulic fluid flows in the lines and is utilized to transmit pressure signals in the system.

Typically, the system may be utilized in a subsea oilwell drilling operation. The system may be utilized to control a blowout preventer (BOP) or the like.

Blowout preventer **10** is schematically represented. A suitable piston **10A** in the schematic BOP is connected to suitable BOP rams or the like. Depending upon the actuation of BOP **10**, the BOP rams may be operated wherein the oilwell which is being drilled may be effectively closed to prevent an undesirable blowout of the well. Piston **10A** of BOP **10** effectively divides BOP **10** into separate chambers. The chambers are selectively supplied with hydraulic fluid, under pressure, to act upon piston **10A** and cause motion thereof.

One chamber of BOP **10** is connected via a hydraulic line to the outlet port of shuttle valve **11**. The other chamber of BOP **10** is connected via a suitable hydraulic line to the outlet port of shuttle valve **12**. Shuttle valves **11** and **12** are typical shuttle valves. These shuttle valves are manufactured by Offshore Systems Inc. manufacturers of Payne Products. The shuttle valves may be of the standard type wherein a piston is moved as a function of the velocity of hydraulic fluid applied to either side thereof or a positive displacement type shuttle valve as described in the copending application of V. H. Payne entitled Pressure Operated-Positive Displacement Shuttle Valve and bearing Ser. No. 877,120.

Shuttle valves **11** and **12** each have one inlet port thereof connected to a separate outlet port of three position valve **13**. Shuttle valves **11** and **12** furthermore each have one inlet port thereof connected to a separate outlet port of three position valve **14**. Three position valves **13** and **14** are the valves which form the instant invention and are described in detail hereinafter.

Three position valve **13** has the inlet port connected to Input **1**. The pilot pressure inlet of three position valve **13** is connected to Regulator **1**. The operating pressure inlet of valve **13** is connected to Regulator **2** via normally open gate valve **16**. The operating pressure inlet of valve **13** is further connected to Regulator **1** via normally closed gate valve **15**.

The inlet port of three position valve **14** is connected to Input **2**. Pilot pressure inlet of valve **14** is connected to Regulator **3**. The operating pressure inlet of valve **14** is connected to Regulator **4** via normally open gate valve **18** and to Regulator **3** via normally closed gate valve **17**.

In operation, control signals are supplied to BOP **10** via valves **11** through **14** in accordance with conditions which are established at the surface control unit or console. For example, pressurized hydraulic fluid is supplied via any suitable known means to Inputs **1** and **2**. The pressurized hydraulic fluid is supplied to the inlet ports of valves **13** and **14**. In addition, Regulator **1** and Regulator **3** are designed to supply a standard reference or pilot pressure. In a preferred embodiment, the reference or pilot pressure is on the order of 500 psi. This pressure is supplied to the pilot pressure inlet port of valves **13** and **14**.

Similarly, Regulator **2** and Regulator **4** are designed to provide pressurized hydraulic fluid as well. In the case of Regulators **2** and **4**, the hydraulic fluid is pressurized to 1,500 psi. The operating pressure represented by the 1,500 psi hydraulic fluid is selectively applied to the operating pressure inlet of valves **13** and **14** in accordance with the operating conditions of gate valves **16** and **18**, respectively.

In a typical operation, gate valve **16** is open while gate valve **15** is closed. Thus, pilot pressure hydraulic fluid of 500 psi is applied to the pilot pressure inlet port of valve **13** by Regulator **1**. Conversely, a 1,500 psi hydraulic fluid is applied to the operating pressure inlet of valve **13**. The pressure differential operates on a piston (see FIG. **2**) within valve **13** so that Input **1** is essentially connected to the input of shuttle valve **12** via valve **13**. However, shuttle valve **11** will not receive a pressurized hydraulic fluid signal via valve **13**. The hydraulic fluid which is supplied to shuttle valve **12** causes operation of valve **12** such that the hydraulic fluid is passed therethrough to BOP **10** to effect a suitable operation thereof. In this embodiment, the conditions described supra cause BOP **10** to open.

Meanwhile, since three position valve **13** and the associated control apparatus is operating properly, gate valve **18** is closed and gate valve **17** is open. Consequently, 500 psi hydraulic fluid is supplied to both the pilot pressure inlet and the operating pressure inlets of three position valve **14**. As will be described hereinafter, the equal pressure on opposite sides of the piston in valve **14** causes this piston to assume a position wherein Input **2** is blocked relative to both of the outlets of valve **14**. Consequently, no pressurized hydraulic fluid is supplied to either of valves **11** or **12** by valve **14**.

If now the operation of BOP **10** is required, gate valve **16** is closed while gate **15** remains closed. Consequently, the 500 psi hydraulic fluid continues to be applied to the pilot pressure inlet of valve **13** while 0 psi hydraulic fluid is supplied to the operating pressure inlet of valve **13**. This pressure differential will operate upon the piston in valve **13** whereby Input **1** now communicates with the other outlet port thereof whereby hydraulic fluid is supplied to shuttle valve **11**. Conversely, no pressurized hydraulic fluid is supplied to shuttle valve **12** via valve **13**. Since valve **14** does not supply any pressurized hydraulic fluid to either of valves **11** or **12** as noted supra, shuttle valve **11** is now operated whereby hydraulic fluid passes therethrough to BOP **10**. In this embodiment, the hydraulic fluid is supplied to BOP **10** to effect pressure on piston **10A** to effectively close the BOP. This kind of operation wherein BOP **10** is opened or closed as a function of the pressures supplied to the operating pressure inlet of valve **13** will continue. That is, operation of gate valve **16** will permit selective operation of valve **13** which controls shuttle valves **11** and **12** and, thereby, the application of hydraulic fluid to BOP **10**.

If now, a malfunction occurs relative to the controlling units whereby it becomes desirable to direct the operation of the system by the redundant controls, gate valve **16** is closed and gate valve **15** is opened. Thus, a similar pressure is applied to the pilot pressure and operating pressure inlets of valve **13** whereby the valve blocks Input **1** from the outlets. Thus, Input **1** does not communicate with either of the outlets of valve **13** and shuttle valve **11** and **12** are not affected thereby.

Contemporaneously therewith, gate valve **17** is closed and gate valve **18** is placed in the appropriate position. Thus, if gate valve **18** remains closed, the 500 psi hydraulic fluid pressure is applied to the pilot pressure inlet of valve **14** and causes valve **14** to assume one condition. Conversely, if gate valve **18** is opened, the 1,500 psi hydraulic fluid is applied to the operating pressure inlet of valve **14** and causes valve **14** to assume a different condition.

Depending upon the condition of valve **14** (as described above), Input **2** communicates with one of the outlets thereof. Thus, either shuttle valve **11** or shuttle valve **12** is caused to operate thereby providing communication from Input **2** through to BOP **10**.

Thus, it is shown that two separate and redundant control systems can be used to control the operation of BOP **10**.

Referring now to FIGS. **2** and **3** concurrently, there are shown sectional views of the valve which forms the instant invention. This valve is represented by valves **13** or **14** in FIG. **1** and a description of either valve applies to both. Valve **13** (FIG. **2**) includes an outer housing having a body **50**. Body **50** may be fabricated by any suitable technique as for example by machining barstock or it may be molded or the like. Typically, body **50** has a substantially rectangular configuration. That is, body **50** is an elongated member which has a substantially square end-view configuration. Bore **51** is provided in body **50** along the longitudinal axis thereof. Bore **51** may be provided by suitable machining or molding operations on body **50**. Bore **51** extends through body **50** in the elongated dimension.

The housing also includes a pilot pressure end cap **52** for one end of body **50** and a pressure end cap **53** at the other end of body **50**. Pilot pressure end cap **52** has an external configuration which substantially mates with the external configuration of body **50**. End cap **52** is mounted on body **50** by means of the bolt and washer assembly **99**. The internal configuration of end cap **52** includes a first reduced portion **52A** which substantially mates with the inner surface of bore **51**. An annular groove is supplied in the outer surface of reduced portion **52A** of end cap **52** and O-ring **54** is inserted in the annular groove. O-ring **54** provides a seal between end cap **52** and body **50**.

A further reduced portion **52B** of end cap **52** extends into bore **51** in body **50**. A large axial bore or cavity **58** is provided in the reduced portions of end cap **52**. An annular groove is provided on the inner surface of cavity **58** and O-ring **55** is inserted into the groove. The pilot pressure inlet bore is provided in end cap **52** and communicates with cavity **58** so that hydraulic pressure from the pilot pressure regulator source can be supplied to the internal components of valve **13**. A suitable threaded coupling may be provided at the pilot pressure bore whereby hydraulic lines may be coupled thereto.

End cap **53** also has an external configuration which is similar to the configuration of body **50**. End cap **53** is mounted on housing **50** by means of the bolt and washer assemblies **98**. In addition, end cap **53** includes a first reduced portion **53A** which mates with the inside surface of bore **51** in body **50**. An annular groove is provided in reduced portion **53A** and O-ring **56** is inserted into this annular groove. O-ring **56** provides a seal between end cap **53** and body **50**. A further reduced portion **53B** of end cap **53** extends inwardly of bore **51** in body **50**. Extended portion **53B** has a large bore or cavity **57** therein. The relationship between cavity **57** and cavity **58** is a function of the relative pressures which will be applied at the pilot pressure

inlet and the operating pressure inlet. The operating pressure inlet is provided in the external surface of end caps **53** and communicates with the operating pressure source to cavity **57**.

Centering piston **59** is a cup-like sleeve member which is disposed within cavity **57**. The outer diameter of centering piston **59** is substantially similar to the internal diameter of of cavity **57**. An annular groove on the inner surface of cavity **57** is provided for O-ring **60** whereby a fluid seal is provided between the surface of cavity **57** in end cap **53** and the outer surface of centering piston **59**.

Centering piston **59** includes a cavity **61** therein. Cavity **61** is in the nature of an axial bore which passes only part way through the length of centering piston **59**. Aperture **61A** in the bottom of centering piston **59** provides communication between cavities **57** and **61**. An annular groove provided in the inner surface of centering piston **59** retains O-ring **62**. As will be described in detail, O-ring **62** provides a fluid seal with an arm of a shiftable inner body within the housing of valve **13**. Centering piston retainer **63** is a substantially disk-like or washer-like retainer which is mounted at the end of reduced portion **53B** of end cap **53** by means of suitable screws **64**. Centering piston retainer **63** includes a center aperture therein through which the operating piston arm passes. Retainer **63** retains centering piston **59** within cavity **57**. As is seen, centering piston **59** is shorter than the depth dimension of cavity **57** whereby centering piston **59** is free to move longitudinally within cavity **57**.

An aperture is provided in the upper surface of body **50**. This aperture passes through the external portion of the body and communicates with bore **51** in body **50**. Inlet seal plate **64** is mounted in the aperture. Seal plate **64** may be of a substantially cylindrical configuration, having dimensions which are similar to the dimensions of the aforementioned aperture. Bore **65** passes through seal plate **64** and communicates with internal bore **51**. An annular groove is provided around the circumference of seal plate **64** to retain O-ring **66** to provide a hydraulic seal between seal plate **64** and body **50**. Inlet flange **67** is fabricated of any suitable barstock or the like and is mounted on the exterior of body **50** adjacent seal plate **64**. Inlet flange **67** has dimensions which are larger than the aperture for seal plate **64** and is, typically, rectangular in configuration. Inlet port **68** has a threaded portion for receiving suitable inlet fittings. Inlet port **68** communicates with bore **65** in inlet seal plate **64** to provide an inlet to bore **51**. An annular groove surrounds the internal bore end of port **68** to retain O-ring **69**. O-ring **69** provides a hydraulic seal between the surfaces of inlet flange **67** and seal plate **64** adjacent the juncture of bores **65** and **68**. Inlet flange **67** is mounted on body **50** by means of suitable bolt and washer assemblies **70**. Seal plate **64** is mounted on inlet flange **67** by means of suitable recessed bolt or screw assemblies **71**.

Opposite inlet seal plate **64** is an aperture in body **50** which passes from the exterior thereof to communication with bore **51**. Outlet seal plate **72** has outer peripheral configuration and dimensions to closely mate with and be mounted in the aforesaid aperture. Outlet seal plate **72** includes an annular groove in the outer periphery thereof for retention of O-ring **73**. O-ring **73** provides a hydraulic seal between outlet seal plate **72** and body **50**. Outlet seal plate **72** includes two bores which pass therethrough. In the embodiment disclosed, bores **74** and **75** have different configurations and dimensions at the internal and external surfaces thereof. However, with a relatively minor modification in the dimensions of seal plate **72**, bores **74** and **75** need not have any unusual configuration. The important consideration is that the internal surface area of outlet seal plate **72** between bores **74** and **75** must be at least as large as the opening in the operating piston as will be described hereinafter.

Outlet flange **76** may be fabricated of barstock or the like and is mounted at the exterior of body **50** by means of the bolt and washer assemblies **77**. Two outlet bores **78** and **79** respectively are provided in outlet flange **76**. Bores **78** and **79** may be drilled or molded in flange **76**. Outlet bore **78** has a portion thereof which communicates with bore **74** in outlet seal plate **72** to provide one outlet from bore **51**. Likewise, bore **79** has a portion thereof which communicates with bore **75** of outlet seal plate **72** to provide another outlet from bore **51**. The external ends of bores **78** and **79** include suitable threaded coupling arrangements for connection to other hydraulic hardware. By suitable recess screw assemblies **80**, outlet seal plate **72** is affixed to outlet flange **76**. Annular grooves are provided in the internal surface of outlet flange **76** which grooves individually surround the bore portions which mate with bores **74** and **75**. These annular grooves are utilized to retain O-rings **81**. O-rings **81** provide hydraulic seals between outlet seal plate **72** and outlet flange **76** with regard to the communication of the respective bores in the aforementioned elements.

Shiftable inner body **82** may be fabricated of ordinary barstock. Body **82** comprises enlarged center portion and two protruding pistons or arm portions which have different diameters. Enlarged center portion **84** is essentially cubic in configuration. Appropriate beveling at the corners of the cube is utilized to provide better operation and avoid edges which may bind in operation of the valve. Elongated arm **83** extends from one side of center portion **84**. Arm **83** passes through the aperture in center piston retainer **63** and into cavity **61** in centering piston **59**. Another arm **85** extends from the opposite side of enlarged center portion **84** into cavity **58** in end cap **52**. Arm **85** has a diameter which is approximately twice the diameter of arm **83**. Thus, the piston area upon which force is exerted by pressurized hydraulic fluid is much larger in the case of arm **85** than in the case of arm **83**.

Bore **86** passes through enlarged portion **84** transverse to the center line of arms **83** and **85**. A pair of shear seals or rings **87** and **88** are mounted in aperture **86**. Coil spring **89** is mounted in bore **86** between shear seals **87** and **88** causing the shear seals to be forced outwardly and into contact with inlet seal plate **64** and outlet seal plate **72**, respectively. O-rings **90** and **91** are retained in suitable annular grooves of the circumference of seals **87** and **88**, respectively. O-rings **90** and **91** provide hydraulic seals between the shear seals and the internal surface of bore **86**.

Referring specifically to FIG. **3**, a return flange **97** is mounted on body **50** by means of suitable bolt and washer assemblies **93**. Return flange **97** may be

fabricated of any suitable barstock or the like. Central bore **94** passes through return flange **92**. Bore **94** may include suitable coupling or threaded portions for connection with other hardware. For example, check valve may be inserted. However, the coupling may be excluded entirely. An annular groove surrounds bore **94** on the inner surface of return flange **92** and retains O-ring **95**. O-ring **95** provides a hydraulic seal between the surfaces of return flange **92** and body **50**. Bore **94** communicates with bore **96** which passes through the side of body **50**.

In operation, inlet port **68** is connected to a suitable input device. The input device supplies hydraulic fluid to the valve under suitable pressure. Outlets **1** and **2** are connected to a suitable utilization device as for example the shuttle valve as shown in FIG. **1**. Pilot pressure inlet port is connected to a regulator for receiving a "reference" pressure signal in the form of a hydraulic fluid. The operating pressure inlet is connected to a source of hydraulic fluid which supplies fluid having a selectively variable pressure.

The object of the operation of the valve is to selectively transfer the hydraulic fluid supplied at the inlet to one of the outlets via the apertured inner body **82**. In the alternative, the inlet is isolated from either of the outlets with a suitable positioning of inner body **82**.

As suggested supra, the pilot pressure is arbitrarily designated as 500 psi. The operating pressure varies between 0 and 1,500 psi. With valve **13** in the position shown in FIG. **2**, the conditions exist wherein the 500 psi pilot pressure is applied to the pilot pressure inlet while the 1,500 psi hydraulic fluid is supplied to the operating pressure inlet. Thus, the 1,500 psi hydraulic fluid pressure signal is supplied to the end surface of centering piston **59** to force the piston to the leftmost position as shown. In addition, the operating pressure hydraulic fluid is supplied against the endmost surface of arm **83** via aperture **61A** in centering piston **59**. The application of 1,500 psi hydraulic fluid on the surface area at the end of arm **83** is sufficient to overcome the total force exerted by the 500 psi pilot pressure on the end surface of arm **85**.

In this position, hydraulic fluid supplied at inlet port **68** passes through port **68** and port **65** in the inlet seal plate. Fluid further passes through the aperture in seal ring **88**, aperture **86** in inner body **82**, the aperture in seal ring **87** and communicates with bore **74** in outlet seal plate **72**. Since bore **74** communicates with bore **78** associated with outlet **1**, fluid also flows through this path. Thus, with a 1,500 psi hydraulic fluid signal supplied to the operating pressure inlet, the hydraulic fluid supplied at inlet port **68** communicates with outlet **1** and is supplied to a suitable utilization device.

If now, by controlling the surface units, the operating pressure is diminished to 500 psi (i.e. identical to the pilot pressure signal or within a suitable range thereof) inner body **82** will be moved toward the right in FIG. **2**. That is, the 500 psi hydraulic fluid signal as applied against the end surface of arm **83** is insufficient to overcome the 500 psi force applied against the end surface of arm **85**. However, as inner body **82** slides toward the right, the end surface of arm **83** abuts against the bottom of cavity **61** in centering piston **59**. Thus, cavity **61** is effectively eliminated. The 500 psi force applied against the end of arm **85** tends to continue pushing piston **82** toward the right. However, the 500 psi hydraulic fluid force applied at the operating pressure inlet port now abuts against the effective end surface of centering piston **57** inasmuch as port **61A** is effectively closed by the end surface of arm **83**. Thus, enlarged portion **84** of inner body **82** shifts only a distance equivalent to the distance between the end surface of arm **83** and the bottom surface of the cavity **61**. This distance has been predetermined to be sufficient to cause the aperture in seal ring **87** to be disengaged from each of bores **74** and **75**. Thus, seal ring **87** abuts against the polished surface of outlet seal plate **72** effecting a good seal therebetween. Since fluid flowing through aperture **86** cannot communicate with bores **74** and **75**, the inlet hydraulic fluid is essentially blocked.

If now, the operating pressure supplied to the operating pressure inlet port is reduced to 0 psi, the 500 psi pilot pressure fluid acts upon the end surface of arm **85** of inner body **82** and forces inner body **82** to the rightmost position. That is, the end surface of arm **83** bears against the inner surface of bore **61** of centering piston **59**. The continued pressure on the end surface of arm **85** causes inner body **82** to move toward the right such that arm **83** moves centering piston **59** along therewith until the end surface of centering piston **59** abuts against the bottom surface of cavity **57**. When inner body **82** has moved to the rightmost position described, aperture **86** and the apertures in the respective shear seals **88** and **87** communicate from inlet port **68** to outlet port **79** via port **75** in outlet seal plate **72**.

Thus, it has been shown that hydraulic fluids supplied at the inlet can be controllably supplied to either of the outlets or to neither of the outlets depending upon the hydraulic fluid pressure supplied at the operating pressure inlet. Clearly, the same operation would occur if the operating pressure dropped from 1,500 psi to 0 psi without the intermediate step. In that instance, inner body **82** would move smoothly and continuously from the leftmost position to the rightmost position without stopping in a centering or blocking step. However, because of the relative dimensions of the aperture in inner body **82** and the space provided between bores **74** and **75** there would be no spurious and undesirable interconnection between inlet source and both outlets. In other words, only one outlet can ever be connected to the inlet at a given time. Consequently, ambiguities in operation are eliminated.

Furthermore, if the operating pressure fluid changes from 0 psi to 500 psi or 1,500 psi inner body **82** will move from the rightmost position to the blocked position (or leftmost position) in the reverse manner to that described. However, the same advantages obtained. That is, the outlet ports are never simultaneously communicating with the inlet port. In addition, the outlet ports can never communicate one-with-the-other to effect an improper and undesirable operation of a utilization device connected to one or the other of the outlets.

In addition, when inner body **82** is moved in valve **13**, one or more of outlet ports **74** or **75** no longer communicate with bore **86** in inner body **82**. The bore (or bores) which do not communicate with bore **86** obviously communicate with the interior cavity **51** of valve **13**. Since the fluid which is returned to valve **13** from the system is under pressure, it must be discharged in

order to prevent valve 13 from becoming pressure locked. Consequently, the fluid which is discharged into cavity 51 is discharged from the valve via ports 96 and 94. In subsea units, the fluid may be discharged to the sea. In land units, the discharge fluid may be returned to a suitable accumulator or the like.

Thus, there is described a preferred embodiment of the instant invention. Those skilled in the art may be able to conceive modifications to this valve. However, any modifications which fall within the purview of the invention are intended to be included therein. The specific configuration and/or dimensions which are recited herein are meant to be illustrative only and are not limitative. For example, the various ports may be located on different sides of the valve and the relative placement thereof may vary somewhat. These and other modifications which may be utilized by those skilled in the art and which fall within the inventive precepts hereinabove noted, are meant to be included within this description.

Having thus described the preferred embodiment of the invention, the embodiments of the invention in which an exclusive property or privilege is claimed are defined as follows:

1. A valve, comprising a housing having a bore therein intermediate its opposite ends, a body shiftable within the bore between a first position near one end, a second position near the other end, and a position intermediate the first and second positions, said housing having an inlet to and a pair of outlets from the bore, said body having port means connecting the inlet with one of the outlets in its first position, connecting the inlet with the other outlet in its second position, and disconnecting the inlet from both outlets in its intermediate position, means for urging the body from its first to its second position, means in the body providing a cavity connecting with the bore, a sleeve sealably reciprocable within the cavity, a piston on the inner body sealably reciprocable within the sleeve, a port in the body connecting with the cavity for admitting fluid pressure thereto for urging said piston and said sleeve in a direction to move the body to its first position, means on the sleeve engageable by the piston, as the piston moves in the opposite direction, to cause the sleeve to follow the piston as the body moves from its intermediate to its second position, and means on the cavity engageable with the sleeve, as the sleeve moves in said first-mentioned direction, to prevent movement of the sleeve with the piston as the body moves from its intermediate to its first position.

2. A valve of the character defined in claim 1, wherein the urging means comprises means in the body providing another cavity connecting with the bore, a piston on the inner body sealably reciprocable in said other cavity, and a port in the body connecting with said other cavity for admitting fluid pressure thereto to urge said piston and said sleeve in a direction to move the body to its second position.

3. A valve of the character defined in claim 1, wherein said port means comprises a single port having seal rings therein urged outwardly toward each of its ends, the inner diameter of the ring adjacent the outlets being less than the longitudinal distance between the outlets so as to prevent communication with both when said body is in its intermediate position.

4. A three-position valve adapted to control the flow of fluid to a fluid pressure-operated utilization device, including selectively passing said fluid through either of two outlet lines to said device, and blocking the flow through both of said outlet lines, in response to the relationship between a fluid operating pressure applied from one source and a pilot pressure applied from a second source, comprising: a body member having a longitudinally extending bore therein between a pilot end and an operating end, and having a first aperture extending through the upper portion of said body member and communicating with said bore, and a second aperture extending through the bottom portion of said body member and communicating with said bore; an inlet seal plate positioned in said first aperture, said plate having a bore extending therethrough in fluid communication with said longitudinal bore in the body member; an outlet seal plate positioned in said second aperture, said plate having a first and a second bore extending therethrough from the inner surface to the outer surface of said plate; a pilot pressure end cap mounted at the pilot end of said body member, said cap having a bore therein communicating with the longitudinal bore in said body member; an operating pressure end cap mounted at the operating end of said body member, said cap having a bore therein communicating with the longitudinal bore in said body member; an inner body positioned in the bore in said body member and adapted for movement therein between a first end position near the pilot end of said body member, an intermediate position, and a second end position near the operating end of said body member, said inner body having a central portion with a bore extending traversely therethrough and first and second arm portions extending longitudinally from said central portion and slidable respectively within the bores in the pilot pressure cap and operating pressure cap, seal means positioned at each end of the bore in the central portion of said inner body, said seal means being adapted to prevent fluid communication with said bore in the central portion of the inner body other than through said bore in the input seal plate and through said first and second bores in said output seal plate, and spring means positioned in said bore in the central portion of the piston means and adapted to maintain said seal means in contact with the inner surfaces of the output and the input seal plates, said bore in the central portion being in fluid communication with the bore in the inlet seal plate, the size of said bore in the central portion being such, in relationship to the distance between the first and second bores in the outlet seal plate, that fluid communication between the bore in the central portion and the first bore in the outlet plate is provided when said inner body is at its first end position, fluid communication between the bore in the central portion and said second bore in the outlet plate is provided when said inner body is at its second end position, and fluid communication between the bore in the central portion and said first and second bores in the outlet plate is blocked when said inner body is positioned at said intermediate position, whereby the fluid operating pressure introduced to the valve at the operating end of said body member and the fluid pilot pressure introduced thereto at the pilot end of the body member can be regulated so that said inner body is forced to one

of its end positions and, if desired, to its intermediate position.

5. A three-position valve adapted to control the flow of fluid to a fluid pressure-operated utilization device, including selectively passing said fluid through either of two outlet lines to said device, and blocking the flow through both of said outlet lines, in response to the relationship between a fluid operating pressure applied from one source and a pilot pressure applied from a second source, comprising: a body member having a longitudinally extending bore therein between a pilot end and an operating end, and having a first aperture extending through the upper portion of said body member and communicating with said bore, and a second aperture extending through the bottom portion of said body member and communicating with said bore; an inlet seal plate positioned in said first aperture, said plate having a bore extending therethrough in fluid communication with said longitudinal bore in the body member; an outlet seal plate positioned in said second aperture, said plate having a first and a second bore extending therethrough from the inner surface to the outer surface of said plate; a pilot pressure end cap mounted at the pilot end of said body member, an operating pressure end cap mounted at the operating end of said body member, an inner body positioned in the bore in said body member and adapted for movement therein between a first end position near the pilot end of said body member, an intermediate position, and a second end position near the operating end of said body member, said inner body having a central portion with a bore extending traversely therethrough and first and second arm portions extending longitudinally from said central portion, said pilot pressure end cap and said operating pressure end cap each have a portion extending into the interior of said body member, said extended portion of the pilot end cap having a cavity therein adapted to receive the first arm portion of the inner body extending toward the pilot end of the body member, said extended portion of the operating end cap having a cavity therein adapted to receive the second arm portion of the inner body extending toward the operating end of the body member, said bore in the central portion being in fluid communication with the bore in the inlet seal plate, the size of said bore in the central portion being such, in relationship to the distance between the first and second bores in the outlet seal plate, that fluid communication between the bore in the central portion and the first bore in the outlet plate is provided when said inner body is at its first end position, fluid communication between the bore in the central portion and said second bore in the outlet plate is provided when said inner body is at its second end position, and fluid communication between the bore in the central portion and said first and second bores in the outlet plate is blocked when said inner body is positioned at said intermediate position, whereby the fluid operating pressure introduced to the valve at the operating end of said body member and the fluid pilot pressure introduced thereto at the pilot end of the body member can be regulated so that said inner body is forced to one of its end positions and, if desired, to its intermediate position.

6. A three-position valve adapted to control the flow of fluid to a fluid pressure-operated utilization device, including selectively passing said fluid through either of two outlet lines to said device, and blocking the flow through both of said outlet lines, in response to the relationship between a fluid operating pressure applied from one source and a pilot pressure applied from a second source, comprising: a body member having a longitudinally extending bore therein between a pilot end and an operating end, and having a first aperture extending through the upper portion of said body member and communicating with said bore, and a second aperture extending through the bottom portion of said body member and communicating with said bore; an inlet seal plate positioned in said first aperture, said plate having a bore extending therethrough in fluid communication with said longitudinal bore in the body member; an outlet seal plate positioned in said second aperture, said plate having a first and a second bore extending therethrough from the inner surface to the outer surface of said plate; a pilot pressure end cap mounted at the pilot end of said body member, said cap having a cavity therein communicating with the longitudinal bore in said body member; an operating pressure end cap mounted at the operating end of said body member, said cap having a cavity therein communicating with the longitudinal bore in said body member; an inner body positioned in the bore in said body member and adapted for movement therein between a first end position near the pilot end of said body member, an intermediate position, and a second end position near the operating end of said body member, said inner body having a central portion with a bore extending traversely therethrough and first and second arm portions extending longitudinally from said central portion, said first arm portion being slidable within the cavity in the pilot pressure cap, a centering piston member slidable in the cavity of said operating pressure end cap, said centering piston member having a cavity therein adapted to slidably receive said second arm portion of the inner body and being shorter than the depth dimension of the cavity in the operating end cap, whereby said centering piston member can move longitudinally within the cavity in said operating end cap, said bore in the central portion being in fluid communication with the bore in the inlet seal plate, the size of said bore in the central portion being such, in relationship to the distance between the first and second bores in the outlet seal plate, that fluid communication between the bore in the central portion and the first bore in the outlet plate is provided when said inner body is at its first end position, fluid communication between the bore in the central portion and said second bore in the outlet plate is provided when said inner body is at its second end position, and fluid communication between the bore in the central portion and said first and second bores in the outlet plate is blocked when said inner body is positioned at said intermediate position; whereby the fluid operating pressure introduced to the valve at the operating end of said body member and the fluid pilot pressure introduced thereto at the pilot end of the body member can be regulated so that said inner body is forced to one of its end positions and, if desired, to its intermediate position.

7. The valve of claim 6, said first arm portion of the piston means is larger than the cross-sectional area of the second arm portion of said piston means.

8. The valve of claim 6 in which said cavity in the centering piston member extends only part way through the length of said member from the end thereof toward the center of the body member toward the operating end thereof, said cavity being in fluid communication with the bore in said operating end cap through a bore in the end of said centering piston member.

9. A three-position valve adapted to control the flow of fluid to a fluid pressure-operated utilization device, including selectively passing said fluid through either of two outlet lines to said device, and blocking the flow through both of said outlet lines, in response to the relationship between a fluid operating pressure applied from one source and a pilot pressure applied from a second source, comprising: a body member having a longitudinally extending bore therein between a pilot end and an operating end, and having a first aperture extending through the upper portion of said body member and communicating with said bore, and a second aperture extending through the bottom portion of said body member and communicating with said bore; an inlet seal plate positioned in said first aperture, said plate having a bore extending therethrough in fluid communication with said longitudinal bore in the body member; an outlet seal plate positioned in said second aperture, said plate having a first and a second bore extending therethrough from the inner surface to the outer surface of said plate; including an inlet flange mounted on the external surface of the body member, said inlet flange supporting the inlet seal plate and having an inlet port in fluid communication with the bore in the inlet seal plate, an outlet flange mounted on the exterior of said body member, said outlet flange supporting the outlet seal plate and having a first outlet bore in fluid communication with said first bore in the outlet plate and a second outlet bore in fluid communication with said second bore in the outlet plate, a pilot pressure end cap mounted at the pilot end of said body member, said cap having a bore therein communicating with the longitudinal bore in said body member; an operating pressure end cap mounted at the operating end of said body member, said cap having a bore therein communicating with the longitudinal bore in said body member; an inner body positioned in the bore in said body member and adapted for movement therein between a first end position near the pilot end of said body member, an intermediate position, and a second end position near the operating end of said body member, said inner body having a central portion with a bore extending traversely therethrough and first and second arm portions extending longitudinally from said central portion and slidable respectively within the bores in the pilot pressure cap and operating pressure cap, said bore in the central portion being in fluid communication with the bore in the inlet seal plate, the size of said bore in the central portion being such, in relationship to the distance between the first and second bores in the outlet seal plate, that fluid communication between the bore in the central portion and the first bore in the outlet plate is provided when said inner body is at its first end position, fluid communication between the bore in the central portion and said second bore in the outlet plate is provided when said inner body is at its second end position, and fluid communication between the bore in the central portion and said first and second bores in the outlet plate is blocked when said inner body is positioned at said intermediate position; whereby the fluid operating pressure introduced to the valve at the operating end of said body member and the fluid pilot pressure introduced thereto at the pilot end of the body member can be regulated so that said inner body is forced to one of its end positions and, if desired, to its intermediate position.

* * * * *