Jan. 22, 1935. H. W. NERNST 1,988,564

INSTRUMENT PRODUCING MUSIC

Filed Nov. 24, 1931 2 Sheets-Sheet 1

Fig. 1.

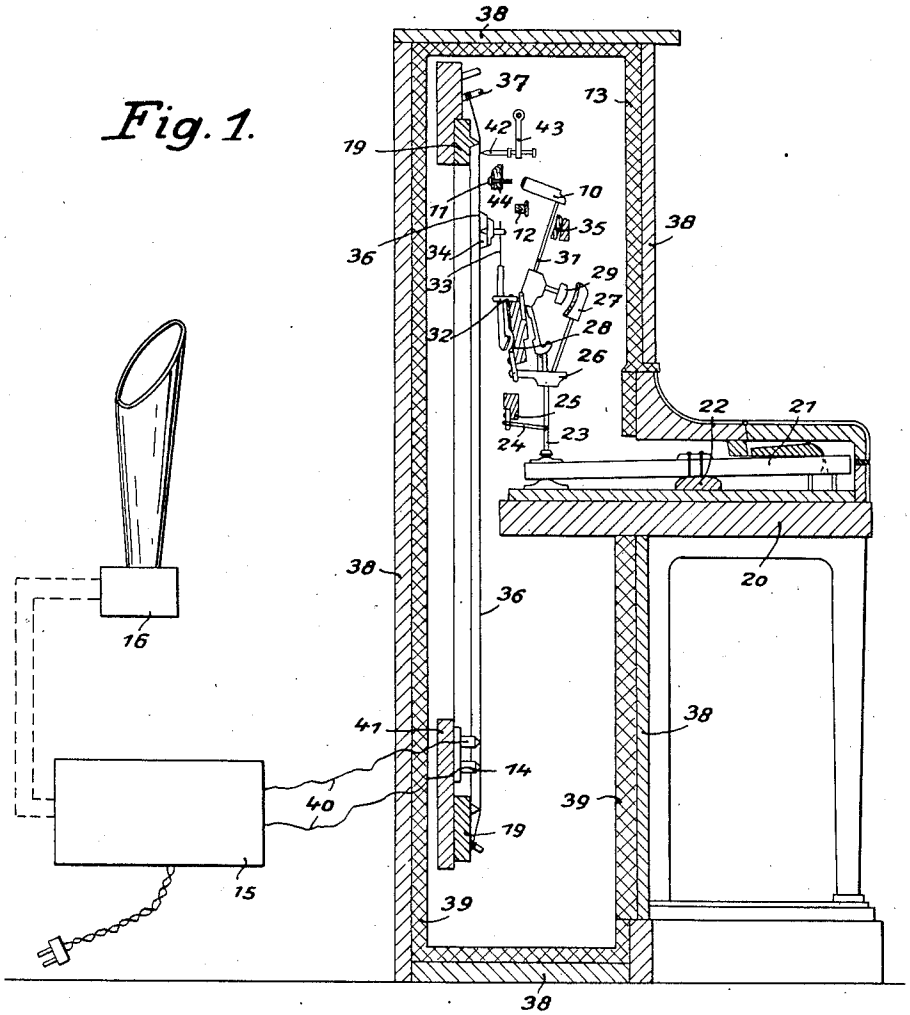

Inventor:-
Hermann Walther Nernst
by E. F. Wunderlich
Atty.

Jan. 22, 1935. H. W. NERNST 1,988,564

INSTRUMENT PRODUCING MUSIC

Filed Nov. 24, 1931 2 Sheets-Sheet 2

Fig. 2.

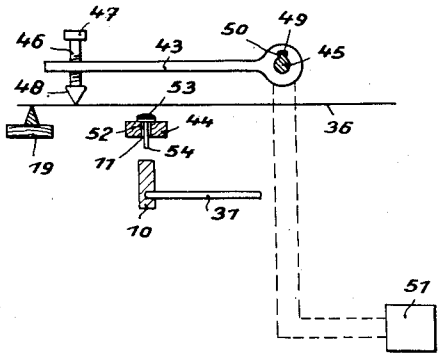

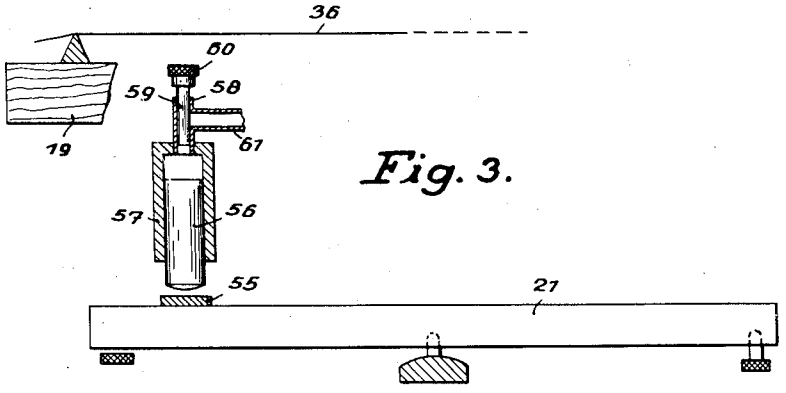

Fig. 3.

Fig. 4.

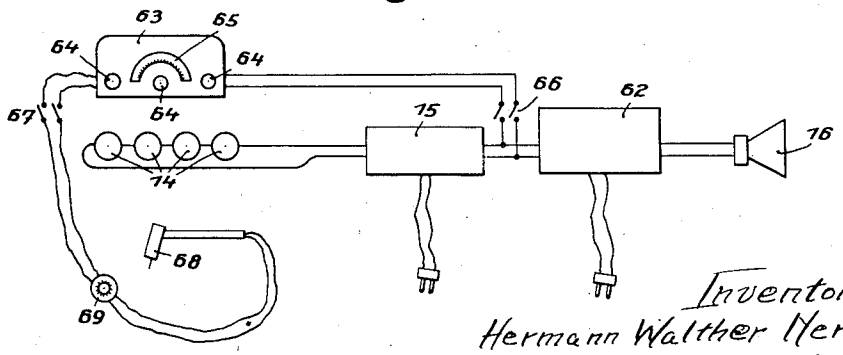

Inventor:-
Hermann Walther Nernst
by E. F. Wunderlich
Atty.

Patented Jan. 22, 1935 1,988,564

UNITED STATES PATENT OFFICE

1,988,564

INSTRUMENT PRODUCING MUSIC

Hermann Walther Nernst, Berlin, Germany

Application November 24, 1931, Serial No. 577,082
In Germany November 30, 1930

11 Claims. (Cl. 84—173)

This invention relates to an apparatus adapted to produce music by means of strings which may be mechanically oscillated by means of a device constructed like a piano. These mechanical oscillations of the strings directly influence electrical relays whereby the mechanical oscillations are converted in electrical oscillating currents. These currents are then suitably amplified and influence acoustic reproducers which transform the electrical oscillations into audible sound oscillations. Such an apparatus is described in my copending parent application, Serial Number 516,480. This application forms a continuation in part of the co-pending application, Ser. No. 516,480.

It is the object of my invention to improve a form of such apparatus adapted to produce music.

Upon comparing such an apparatus with the usual pianos I discovered that in such pianos the oscillations of the strings are damped by the resonant body. In an apparatus according to said copending application, however, no such resonant board is present and therefore no such damping takes place. On the other hand with such new apparatus the mass of the strings can be substantially reduced and as a consequence the strings can oscillate through a much longer time interval than the prior art strings of larger mass, especially when said last-mentioned strings are damped by the resonant body. Sometimes, however, it happens that the strings of the said new apparatus oscillate longer than is desirable and suitable for a piano. If such longer oscillations are allowed to occur, then the instrument operates like a harmonium (parlor organ) or organ. Although in the last-mentioned case organ-like music is produced by strings actuated in an easy manner similar to that of a normal piano without using pipes, nevertheless it is desirable to alter the operation of the instrument so that it works in a manner identical with a normal piano.

There are further described in my copending application the micro-hammers for exciting the oscillations of the strings. Such hammers are capable of exciting such oscillations with the smallest possibly energy. In addition, this substantially prevents an undesired oscillation of the strings during a longer time than that usual with normal pianos.

A further object of the invention is to prevent undesired duration of the oscillations of the strings for the purpose of adapting the new instrument to the usual pianos.

According to the invention the desired result is achieved either by additionally, positively damping the oscillations of the strings or by using special micro-hammers, preferably damped at that end of their movement exciting the strings. However, both means can be used at the same time.

Further particulars of the invention may be explained with reference to the embodiments of the invention shown in the drawings, Fig. 1 of which shows a vertical cross-section of a piano and, more schematically, the electric connections, Fig. 2 showing a detail of the damping means and micro-hammer, Fig. 3 showing another performance of the micro-hammer, while Fig. 4 shows a general electrical connection and arrangement usable for practically operating the instrument according to the invention.

Referring to Fig. 1 it is to be understood that this figure merely corresponds to my mentioned older copending application. It is assumed that the piano possesses the usual structure, having a keyboard suitably connected with hammers. Accordingly the keylevers 21 are pivotally supported at 22 on the bracket 20. A link 23 is pivotally connected to the rear end of the keylever 21 and is held in upright position by another link 24 which is pivotally connected with a bracket 25. The upper end of the link 23 is pivotally connected with another lever 26 which is pivotally connected in well-known manner with a support 28. The lever 26 bears the hammer 27. The foot 30 is pivotally connected to the support 28 and provided with a back-stop 29 opposing the hammer 27. There is rigidly connected with the foot 30 a stem 31 of the hammer 10. A lug 32 on the foot 30 bears a spring or other resilient member 33 and a damping means 34 positioned approximately at the end of the member 33. The hammer 10 lies with its stem 31, in normal position, on the abutment 35. This arrangement approximates the well-known keyboard-hammer operating mechanism of a piano. It is therefore to be played upon in the same manner as on the usual piano. One may use also the damping means 34 for producing the same finesses as in normal pianos.

For adjusting the timber of the instrument in the desired way, so that at will it approximates either a normal piano, an organ, or a parlor organ (harmonium), a special damping means is provided, as shown at the top of Fig. 2, and comprising a member 42 having an edge of felt, textile cork or the like, preferably adjustable in a supporting bracket 43. By choosing the material comprising the edge which either touches or is

in the neighborhood of the strings 36, and by adjusting the pressure between the edge and the string, extremely fine adjustment can be made of the period of oscillation of the string 36. It is possible to coordinate a single damping means to all the strings of the instrument, or to use several damping means, one for each group of such strings. There can be also coordinated to each string a special damping means adjustable independently from others.

Means can be provided to lift the damping means simultaneously, or if desired, only several at a time, a handle or pedal being provided for this purpose, connected with the support 43 in suitable manner, it being necessary to this end, that the bracket 43 be slidably or shiftably supported on the frame of the instrument.

For exciting the mechanical oscillations of the strings 36 micro-hammers 11 are provided. These micro-hammers are slidably supported in a bracket 44 which, in turn, is fastened to the frame (not shown) of the instrument. This micro-hammer 11 is contacted by the hammer 10, upon actuation of the keyboard, and is driven with according energy against the coordinated string 36. But the movement of the hammer 10 is stopped by the abutment 12 before the micro-hammer 11 touches the string 36. Therefore the micro-hammer 11 continues its own movement towards a string 36 only by influence of the relatively very small kinetic energy passed to its small mass by the hammer. Apparently the micro-hammer 11 is freely movable in this case in an approximately straight course. Therefore the strings can be excited to mechanical oscillations in a very fine manner following the intentions of the player. The striking face of the micro-hammer 11 is to be formed in this case by an elastic material so that it is driven back after the stroke by reflection into its initial position. Otherwise a course inclined to the horizontal is necessary. Another kind of performance is shown in Fig. 2.

According to the principal invention no resonant body is provided. The strings 36 are fastened and stretched on brackets 19 which are in turn fastened on the rigid frame or support 41 which may be held in any suitable way in the preferably sound-tight casing 38 of the piano. 39 is a lining e. g. of felt. 37 are tuning pins for adjusting the tension of the strings.

Telephone magnets 14 are rigidly connected to the frame 41 which is sufficiently rigid in itself and therefore is not capable of oscillating. Thereby any relative oscillations of the telephone magnets 14 to the strings are prevented. Thereby any troubling oscillations or noises are prevented, which would otherwise be originated by the support 41 if the latter were capable of mechanical oscillations within an audible range.

The strings 36, if excited by the micro-hammer, oscillate accordingly and excite electrical currents in the telephone magnets 14 which are connected by the leads to a thermionic amplifier within the casing 15. The amplified currents then excite one or more loud speakers 16 or other acoustic reproducers.

Fig. 2 shows in detail a damping arrangement and a freely movable micro-hammer according to the invention, but applied to a so-called "grand piano". In such a grand piano the strings are usually arranged in a horizontal, or approximately horizontal plane. Accordingly, in Fig. 2 the strings 36 are supposed to be stretched approximately horizontally. The damping means 42 are applied from above the plane of the strings. There is arranged a horizontal shaft 45 above the strings, and pivotally connected to said shaft are levers 43 each of which is coordinated to a single string 36 and is provided with a threaded opening in which a screw 46 with handle 47 is to be threaded in. On the lower end of the screw 46 an edge 48 is secured formed of suitable material, as e. g. felt. By choosing the weight of the lever 43 and the screw 46 it is possible to adjust very exactly the intensity of the damping of the oscillations of the string 36 by the felt-edge 48 lying upon such string.

The shaft 45 is provided with a key 49. In the end of the lever 43 is provided a recess 50. Therefore, upon rotating the shaft 45 by means of a handle 51 connected in any suitable way, then the key 49, cooperating with the recess 50 lifts the lever 43. In such manner both an adjustable and movable damping is provided. If damping is used, the timber of the instrument is similar to that of a usual piano. Upon lifting the damping means, then the timber is more similar to that of an harmonium or organ.

Instead of using gravity action for pressing the damping edge 48 on the string 36 there may be used any other power as e. g. a coiled or flat spring. The lever 43 in Fig. 1 may be elastic so that any desired tension can be applied to the damping edge 42. However the natural frequency of such elastic lever must not lie within a disturbing range. By regulating the tension in the lever, or in similar manner, such disturbing oscillations can be easily avoided.

It is further possible to adjust the damping by choosing to the desired value and/or changing the distance between the end of the string and the place on which the damping edge touches the strings.

Fig. 2 further shows the micro-hammer as used in Fig. 1, but on an enlarged scale. Between the bracket 44 and the micro-hammer 11 a sleeve 52 can be provided, reducing the friction between the stem of the micro-hammer and the opening in the bracket 44. On the top of the micro-hammer a suitable pad 53 e. g. of felt can be provided. The stem of the micro-hammer is preferably tapered towards its lower end, so that it is easily moved upwardly by the stroke of the hammer 10. Apparently the distance between the lower surface of the bracket 44 and the tip 54 of the micro-hammer is smaller than the distance between the string 36 and the upper surface of the pad 53. Therefore the micro-hammer 11 moves freely, by kinetic energy only, a certain part of its way towards the string 36 and excite the string 36 very quickly and will rebound almost instantaneously. This back-movement is assisted by the gravity action of the micro-hammer.

Fig. 3 shows another detail of the invention. It is possible thereby to execute a quick and sharp stroke on the string 36 without using a complicated mechanism between the key-lever 21 and the hammer 10. The note 21 is there provided on its rear end with a stop 55. A piston 56 of large diameter is arranged within a casing 57 above the stop 55. A hollow cylinder 58 is connected to the upper end of the casing 57. A piston 59 of smaller diameter is slidably arranged within the cylinder 58 and is provided with an upper striking face e. g. of felt 60. An outlet 61 is provided on the cylinder 58.

Upon shifting the key lever 21, by actuating the key the piston 56 is driven upwardly and compresses the air in the casing 57. Accordingly the

piston 59 in the cylinder 58 is moved upwardly very rapidly by the air thus compressed, because of the fact that the diameter of piston 56 is much larger than that of piston 59. As soon as the piston 59 with its surface 60 comes close to the string 36, but has not yet touched it, the lower end of the piston 59 opens the outlet 61. Consequently, the compressed air escapes through the outlet 61 and the piston 59 continues its movement toward the string 36 only by kinetic energy. The air escaping through outlet 61 momentarily produces a vacuum below the piston 59. In every case the piston 59 causes a rapid and sharp stroke on the string 36 and rebounds at once to its lower position, under the influence of both gravity action and suction produced by the piston 56 returning to its initial position upon release of the key lever 21. In every case the outlet 61 prevents the piston 59 and its striking surface 60 from being pressed for a longer time interval against the strings 36 by the air compressed in the casing 57 and cylinder 58 by the piston 56. Thereby the movement of the piston (micro-hammer) 59 is free, and is independent of the position of the piston 56 and the key lever 21. The compressed air forms an intermediate cushion of a compressed elastic fluid accelerating the piston 59 with a desired force and speed. This force is further dependent upon the proportions of the diameters of the pistons 56 and 59, and also upon the mass of the piston 59.

The edge 48 can be made of felt, textile, cork or the like, or can be covered by such materials.

If the lever 43 in Fig. 2 is made entirely or partly elastic, as e. g. using a flat spring, then it is possible to shift the shaft 45 to increase or decrease the degree of damping produced by the edge 48. Instead of such spring any power accumulator can be used.

Fig. 4 shows an electrical connection suitable for operating an instrument according to the invention. It is assumed that the strings are connected in groups and e. g. only four telephone magnets are coordinated to these groups. In the casing 14 the amplifiers and the regulating means for them are provided. In the casing 62 a power-amplifier is arranged and connected wth the loud speaker 16. In the casing 62 a radio set is provided with handles 64 for well-known purposes and with a radio wave-length or frequency-scale 65. The radio set preferably comprises only a few tubes (high frequency amplifier, detector) and can be connected over the switch 66 to a power-amplifier of audio-frequency 62. There exists further the possibility of connecting with the tubes inside the casing 63 in a well-known way over the switch 67 the pick-up 68 of a gramophone and to insert in the connection thereof means 69 for regulating the power of the sound.

The switches 66, 67 can be actuated by the same or separate handles. Obviously it is possible hereby to use the same loud speaker and power-amplifier for the piano or grand piano or the radio set or the gramophone. It is also possible to receive radio music and to accompany it at the same time on the piano, reproducing in the loud speaker both the radio and the piano. It is further possible to have reproduced in the loud speaker gramophone music and to accompany it on the piano.

What I claim is:

1. In a stringed musical instrument provided with electrical means to be influenced by the oscillations of said strings without mechanical intermediary, and being adapted to influence acoustic reproducers by way of amplifiers—, the arrangement of means for permanently damping the mechanical oscillations of said strings while oscillating, said damping means being incapable of audible resonant oscillations with said strings.

2. In a stringed musical instrument provided with a resonant body and electrical means to be influenced by the oscillations of said strings without mechanical intermediary, and being adapted to influence acoustic reproducers by way of amplifiers—, the arrangement of means for permanently damping the mechanical oscillations of said strings while oscillating, said damping means being different from the resonant body and incapable of audible resonant oscillations with said strings.

3. In a stringed musical instrument, as claimed in claim 1, the damping means being common to all the strings.

4. In a stringed musical instrument, as claimed in claim 1, the arrangement of separate permanently damping means for each of the strings.

5. In a stringed musical instrument, as claimed in claim 1, the arrangement of separate permanently damping means for each of a plurality of groups of said strings.

6. In a stringed musical instrument, as claimed in claim 1, the arrangement of adjustable permanently damping means.

7. In a stringed musical instrument, as claimed in claim 1, variable weights for adjusting the permanently damping means.

8. In a stringed musical instrument, as claimed in claim 1, the arrangement of permanently damping means being movable longitudinally of said strings for adjusting the damping action.

9. In a stringed musical instrument, as claimed in claim 1, the arrangement of means for switching in and out of operation the permanently damping means.

10. In a stringed musical instrument, as claimed in claim 1, the arrangement of a power accumulator for adjusting the permanently damping means.

11. In a stringed musical instrument, as claimed in claim 1, the arrangement of a spring for adjusting the permanently damping means.

HERMANN WALTHER NERNST.