May 25, 1948. J. W. SMITH 2,442,217

TWO-CYCLE CRANKCASE COMPRESSION ENGINE, FUEL DISTRIBUTION CONTROL

Filed Aug. 13, 1945 4 Sheets-Sheet 1

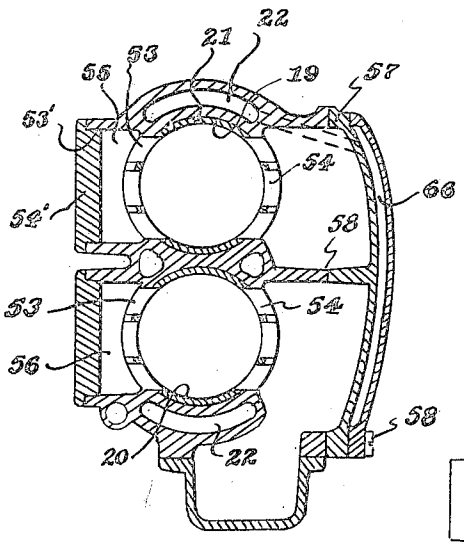

Fig. 4

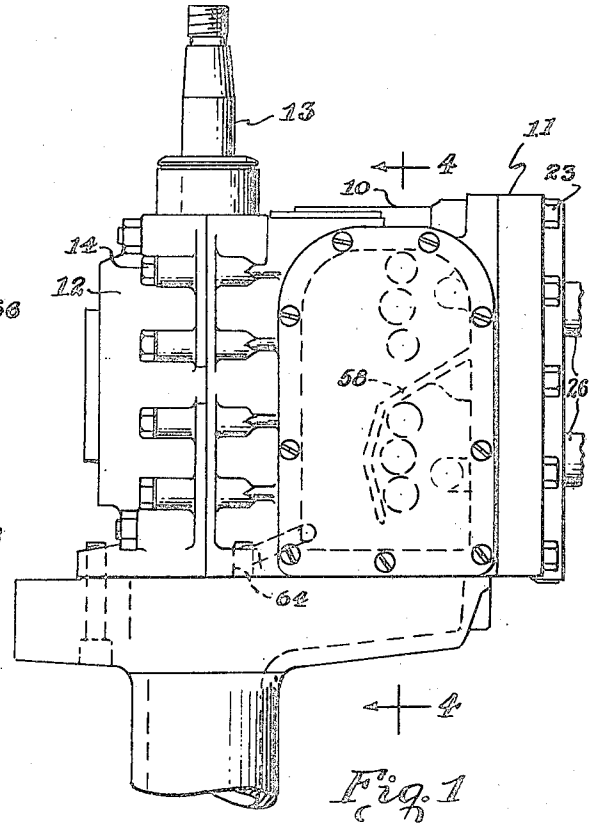

Fig. 1

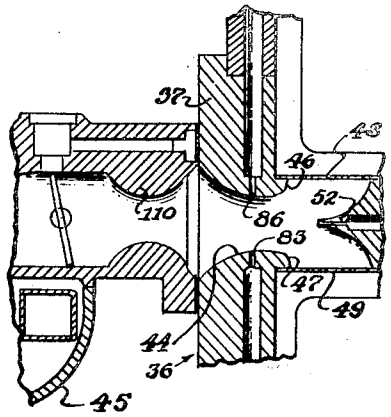

Fig. 11

INVENTOR.
Jay W. Smith
BY Whittemore, Smith & Knapp.
Attorneys

May 25, 1948. J. W. SMITH 2,442,217

TWO-CYCLE CRANKCASE COMPRESSION ENGINE, FUEL DISTRIBUTION CONTROL

Filed Aug. 13, 1945 4 Sheets-Sheet 2

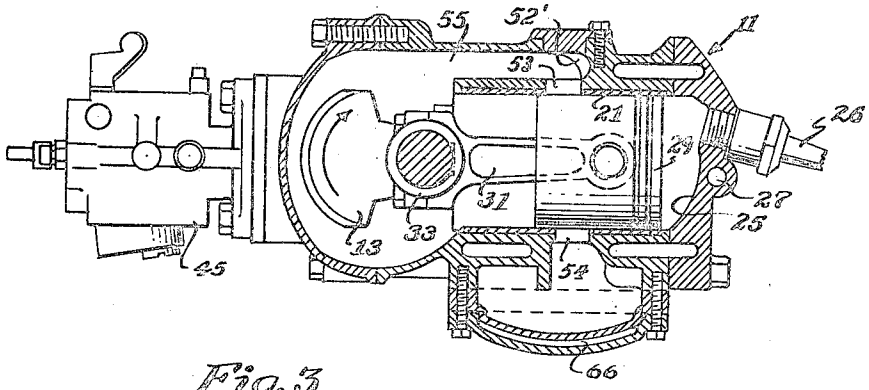

Fig. 3

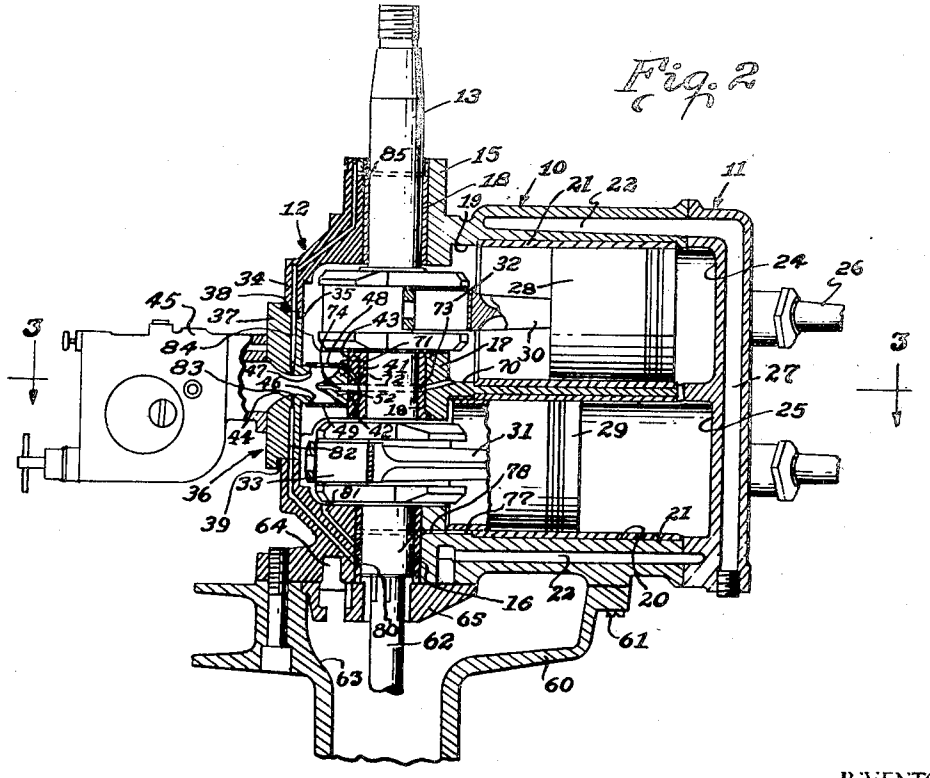

Fig. 2

INVENTOR.
Jay W. Smith
BY Whittemore, Hulbert & Belknap,
Attorneys

May 25, 1948. J. W. SMITH 2,442,217

TWO-CYCLE CRANKCASE COMPRESSION ENGINE, FUEL DISTRIBUTION CONTROL

Filed Aug. 13, 1945 4 Sheets-Sheet 3

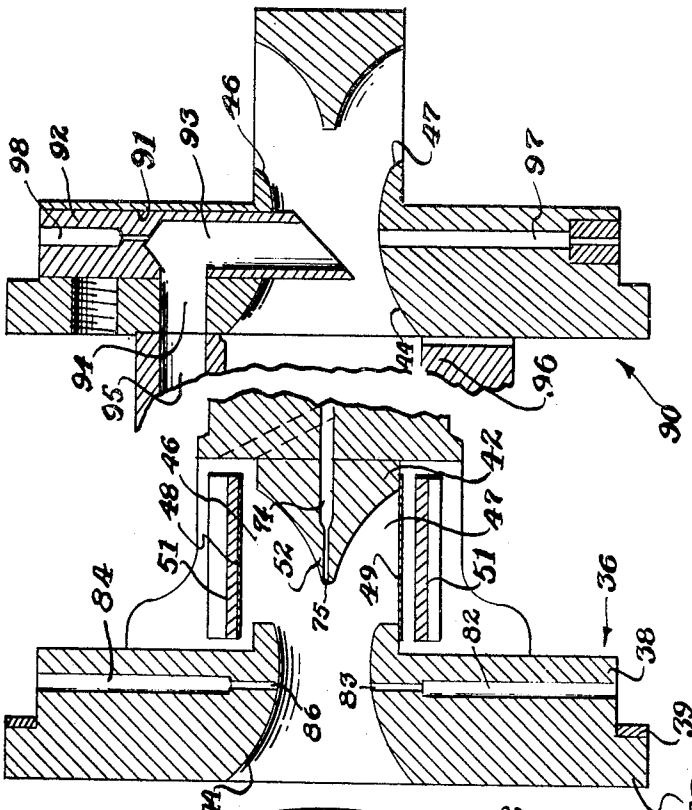

Fig. 7

Fig. 6

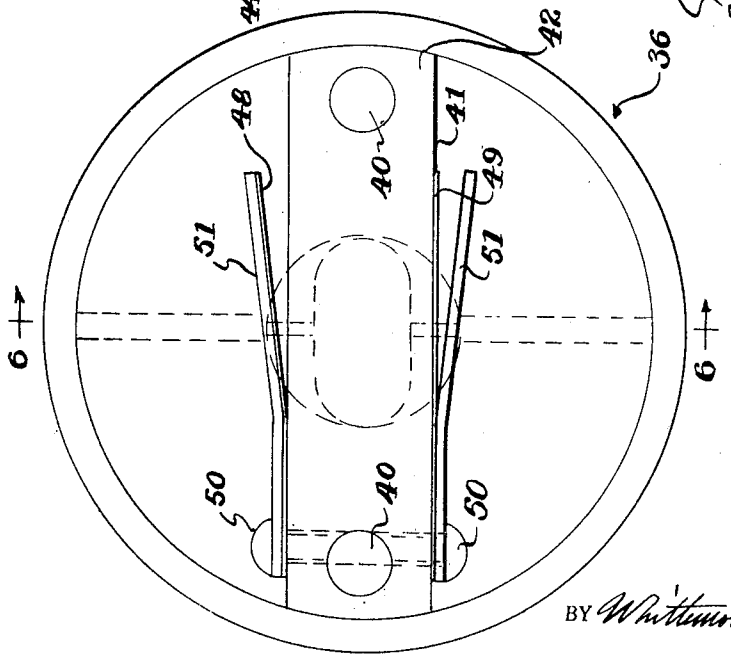

Fig. 5

INVENTOR.
Jay W. Smith
BY Whittemore, Hulbert & Belknap,
Attorneys

May 25, 1948. J. W. SMITH 2,442,217

TWO-CYCLE CRANKCASE COMPRESSION ENGINE, FUEL DISTRIBUTION CONTROL

Filed Aug. 13, 1945 4 Sheets-Sheet 4

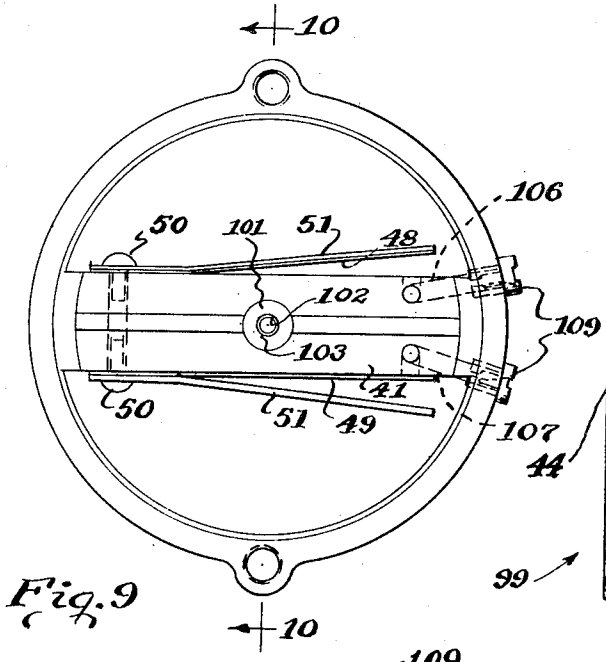

Fig. 9

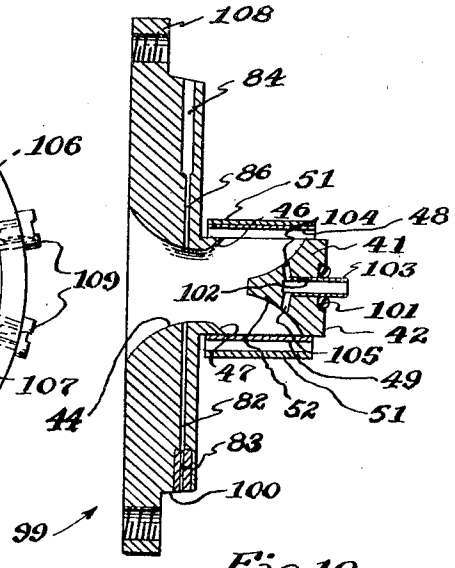

Fig. 10

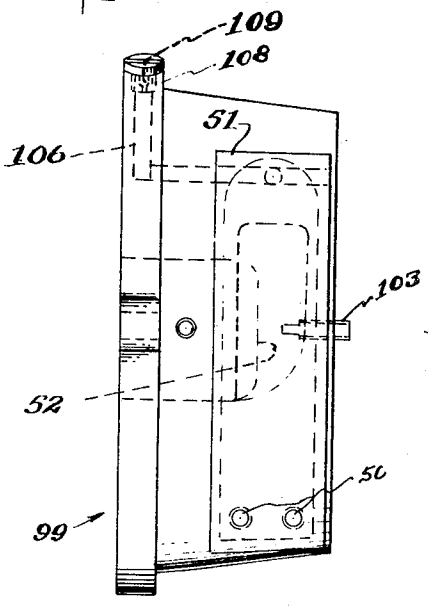

Fig. 8

INVENTOR.
Jay W. Smith
BY Whittemore, Hulbert & Belknap,
Attorneys

Patented May 25, 1948 2,442,217

UNITED STATES PATENT OFFICE

2,442,217

TWO-CYCLE CRANKCASE COMPRESSION ENGINE, FUEL DISTRIBUTION CONTROL

Jay W. Smith, Algonac, Mich., assignor to Chris-Craft Corporation, Algonac, Mich., a corporation of Delaware

Application August 13, 1945, Serial No. 610,507

20 Claims. (Cl. 123—73)

1

This invention relates generally to internal combustion engines and refers more particularly to improvements in engines which operate on the two-cycle principle.

Although it will be apparent as this description proceeds that many of the features of this invention are applicable to different types of two-cycle engines, nevertheless, the present invention is especially adaptable to engines having a vertical crankshaft and having the cylinders superimposed at one side of the crank shaft.

Internal combustion engines embodying the above general design are very light in weight and are particularly well suited for use as portable marine engines commonly known in the trade as outboard motors. While engines of the above type have enjoyed considerable success in the portable marine engine field, nevertheless, they are generally considered unreliable in operation and on many occasions are very difficult to start, especially when attended by operators who are not familiar with the principles of operation of such engines.

The above objections are usually caused by improper fuel mixtures and/or poor distribution of the fuel mixture to the cylinders. The problem of uniformly distributing the fuel mixture to the cylinders is aggravated in engines where one cylinder is superimposed on the other and where the lubricant is combined with the fuel. Under such conditions, it is difficult to maintain the fuel and lubricant in suspension as the fuel mixture is elevated to the top cylinder. As a result, there is a tendency for the fuel mixture admitted to the top cylinder to be very lean and the fuel mixture conducted to the bottom cylinder is frequently too rich. This condition retards starting of the engine and, in any case, is the major cause of roughness in operation of the engine. Inasmuch as the lubricant is also combined in the fuel mixture and also has a tendency to fall out of suspension, it is possible that the top cylinder may be improperly lubricated during extended operation of the engine. In addition, the fuel and lubricant falling out of suspension in the fuel mixture must be dispensed with, and in orthodox engines, is usually drained to the atmosphere. This procedure results in a substantial loss in fuel and lubricant over a long period of use and reduces the efficiency of the engine.

With the foregoing in view, the present invention contemplates an internal combustion engine of the type previously described, having means for effecting a more uniform distribution of fuel

2

mixture to the cylinders and having means for collecting raw fuel, including lubricant, that falls out of suspension. In accordance with this invention, the raw fuel is returned to the intake manifold for combination with the incoming fuel mixture and, as a result, there is practically no waste of raw fuel.

The above feature performs a dual purpose in that it not only enables salvaging raw fuel accumulating in the engine at the places provided but, in addition, serves as a primer for the engine to assist in starting the latter. In the present instance, the flow of fuel mixture through the venturi in the fuel intake manifold together with the action of the pistons on their respective suction strokes forces the raw fuel through scavenging passages into the fuel intake manifold to increase the consistency of the fuel mixture.

Another object of this invention is to provide an intake manifold having a fuel intake passage formed with a venturi and having opposed outlet ports for the fuel mixture, respectively controlled by reed type valves.

Still another object of this invention is to provide an intake manifold having a projection arranged to divide the fuel mixture flowing through the venturi between the two outlet ports and having a scavenging passage therein for discharging raw fuel accumulated in the engine directly into the venturi. This projection greatly assists in properly distributing the fuel mixture to both cylinders of the engine.

A still further object of this invention is to provide an intake manifold of the above general type which forms a removable unit capable of being readily installed and having a part abutting a portion of the intermediate main bearing for the crankshaft in such a manner as to form a fluid-tight seal without the necessity of providing a gasket.

Another object of this invention is to provide an internal combustion engine embodying the above features and composed of a relatively few simple parts capable of being inexpensively manufactured, assembled and installed.

The foregoing as well as other objects will be made more apparent as this description proceeds, especially when considered in connection with the accompanying drawings, wherein—

Figure 1 is a side elevation of an internal combustion engine constructed in accordance with this invention;

Figure 2 is a longitudinal sectional view through the engine shown in Figure 1;

Figure 3 is a sectional view taken substantially on the plane indicated by the line 3—3 of Figure 2;

Figure 4 is a sectional view taken on the plane indicated by the line 4—4 of Figure 1;

Figure 5 is a rear elevation of the intake manifold;

Figure 6 is a sectional view taken substantially on the plane indicated by the line 6—6 of Figure 5;

Figure 7 is a view similar to Figure 6 showing a slightly modified form of intake manifold;

Figure 8 is a side elevation of still another form of intake manifold;

Figure 9 is an end elevation of the construction shown in Figure 8;

Figure 10 is a sectional view taken on the plane indicated by the line 10—10 of Figure 9; and

Figure 11 is a fragmentary sectional view showing another embodiment of this invention.

The internal combustion engine selected for the purpose of illustrating the present invention is of the two-cylinder, two-cycle type wherein the lubricant is combined with the fuel mixture admitted to the engine and wherein the cylinders are supported in superimposed relationship. An internal combustion engine of this general description is very light in weight and finds particular utility for use as a portable marine engine.

In detail the internal combustion engine shown in the several figures of the drawings comprises a casing having a cylinder block 10, a cylinder head 11 and a crankcase 12. In order to reduce the weight of the engine to a minimum, the above parts are preferably formed of aluminum, aluminum alloy or some other material which is light in weight and possesses the requisite characteristics.

The cylinder block 10 and the crankcase 12 are fashioned to cooperate with one another in forming the main bearings for the crankshaft 13 and the crankcase is secured to the cylinder block by a plurality of studs 14. As shown in Figure 2 of the drawings, the top main bearing is indicated by the reference character 15 and the bottom main bearing is designated by the numeral 16. The intermediate main bearing is indicated by the reference character 17 and it will be noted that each bearing is provided with a liner 18 formed of a material possessing high wear resisting qualities.

It will further be noted from Figure 2 of the drawings that the cylinder block 10 is bored to form superimposed cylinders 19 and 20. A liner 21 of high wear resisting material is secured in each cylinder in accordance with conventional practice and the outer ends of the cylinders are open. In the present instance the internal combustion engine is liquid cooled and, therefore, the block 10 is fashioned with the required jackets 22 to enable circulation of the cooling medium around the cylinders.

The outer ends of the cylinders are closed by the head 11 and the latter is secured to the block by studs 23. The head 11 is formed with combustion chambers 24 and 25, which respectively communicate with the outer ends of the cylinders and are each provided with threaded openings for receiving an ignition plug 26. In order to enable the cooling medium to circulate through the head 11 as well as through the block 10, the head is formed with a jacket 27, which extends over the combustion chambers and communicates with the jackets 22 in the block 10.

Pistons 28 and 29 are respectively slidably supported in the cylinders 19 and 20. The pistons 28 and 29 are respectively connected to the crankshaft 13 by means of a pair of connecting rods 30 and 31. The rod 30 is connected to a crank 32 formed on the shaft 13 between the main bearings 15 and 17. The rod 31, on the other hand, is connected to a crank 33 formed on the shaft 13 between the intermediate bearing 17 and bottom main bearing 16. The cranks 32 and 33 are positioned 180° out of phase so that rotation of the crankshaft effects movement of the pistons in their respective cylinders in opposite directions in accordance with conventional practice.

The wall 34 of the crankcase opposite the cylinders is bored to form an opening 35, and a fuel mixture intake manifold 36 is positioned in the opening 35. Upon reference to Figures 5 and 6 of the drawings, it will be noted that the intake manifold comprises a cap portion 37 having a reduced cylindrical portion 38 of an external diameter predetermined to enable pressing the same into the opening 35. An annular gasket 39 is clamped between the inner side of the shoulder formed by the reduced portiton 38 and the adjacent wall 34 of the crankcase 12 by studs 40, which are anchored in the intermediate main bearing 17. The cap portion 37 is formed with an inwardly extending rib 41 which extends diagonally of the cylindrical portion 38 and is formed with a flat wall 42 at the inner side for contact with a corresponding surface 43 formed on the intermediate main bearing 17. This surface contact provides a fluid-tight joint without the use of sealing means such as gaskets and the like.

The manifold 36 is further provided with an axially extending opening 44 shaped to form a venturi and having the outer end communicating with the fuel mixture passage of a suitable carburetor indicated by the reference character 45. The inner end of the opening or passage 44 communicates with opposed ports 46 and 47 respectively formed in the top and bottom walls of the rib 41.

The flow of fuel mixture through the ports into the crankcase is respectively controlled by a pair of reed valves 48 and 49. These valves are in the form of flat spring metal plates and are respectively secured at corresponding ends to the top and bottom walls of the rib 41 by means of fastener elements 50. The free end portions of the valves respectively extend over the ports 46 and 47 and the extent of opening of the valves is restricted by rigid backing members 51, also secured to the rib 41 by the fastener elements 50.

The fuel mixture flowing from the carburetor 45 through the Venturi passage 44 is approximately equally divided between the two ports 46 and 47 by a partition 52. The partition 52 is substantially V-shaped in cross-section and projects transversely of the passage 44 with the outer edge arranged in a plane including the axis of the venturi 44. This construction improves the fuel distribution characteristics of the engine because it tends to supply the same amount of fuel mixture to the upper and lower cylinders.

Upon reference to Figure 4 of the drawings, it will be noted that one side of each of the cylinders is formed with intake ports 53 and the opposite sides of the cylinders are respectively formed with exhaust ports 54. The above ports are arranged adjacent the upper ends of the cylinders and the intake ports 53 communicate with the interior of the crankcase. In detail, the intake ports 53 for the top cylinder 19 communicate with the crankcase through the medium of a

passage 55 formed in the cylinder block and the intake ports 53 for the cylinder 20 communicate with the crankcase through a passage 56, also formed in the cylinder block. As shown in Figures 3 and 4 of the drawings, the cylinder block is bored opposite the intake ports to form openings 53' which respectively communicate with the outer ends of the passages 55 and 56. These openings are normally closed by caps 54' and, in addition to facilitating machining of the ports, also enable varying the contour of the outer end walls 52' of the passages to impart different flow characteristics to the fuel mixture. As shown particularly in Figure 3 of the drawings, the wall portions 52' of the passages are respectively formed by projections on the caps 54', so that the shape of the wall portions 52' may be readily changed by merely interchanging the caps. Attention is also called to the fact that the direction of rotation of the crankshaft is toward the intake ports 53. This arrangement assists in directing the fuel mixture toward the intake ports and affords what may be termed a supercharger action on the fuel mixture. The exhaust ports 54 communicate with an exhaust manifold 57, which is secured to the adjacent side of the cylinder block by suitable fastener elements 58. The exhaust ports 54 for the top cylinder 19 are separated from the exhaust ports 54 associated with the bottom cylinder 20 by means of a baffle 58 formed by projections respectively extending from the manifold 57 and cylinder block 55. The products of combustion from both series of ports are introduced to an outlet conduit 59 which extends downwardly from a cap 60 in concentric relation to the axis of the crankshaft. The cap 60 is secured to the bottom of the engine by fastener elements 61 and also encloses the driven shaft 62 as well as the cooling medium supply conduit 63. In this connection it will be noted that the upper end of the supply conduit 63 communicates with an annular passage 64 formed in the bottom wall of the engine in concentric relation to the crankshaft and closed by a cap 65. The annular passage 64 also communicates with one of the jackets 22 to supply cooling medium to the jackets formed in the cylinder block and head. Attention is also called to the fact, at this time, that the exhaust manifold 57 is formed of two sections secured together by the fastener elements 58 and spaced from each other. This arrangement provides a space 66 between the sections for the cooling medium and serves to maintain the temperature of the manifold below a critical value.

It follows from the foregoing that when the piston 29 is moved inwardly in the cylinder 20 on its power stroke, fuel mixture is drawn into the outer end portion of the cylinder 20 through the associated intake ports 53, and the products of combustion are scavenged through the exhaust ports 54. At the same time, the piston 28 moves outwardly in the cylinder 19 to close the associated intake ports 53 and exhaust ports 54. After these ports are closed, the fuel mixture previously admitted to the cylinder 28 through the ports 53 is compressed. The fuel mixture is compressed in the combustion chamber 24 and is ignited by the associated plug 26 when the piston 28 is advanced a predetermined distance beyond its dead center position. The pressure rise in the cylinder 19 resulting from burning of the fuel mixture forces the piston 28 inwardly and imparts a power impulse to the crankshaft before the intake ports 53 are again opened by the piston 28.

The suction caused by inward movement of the piston 28 draws fuel mixture from the crankcase into the cylinder 19 through the intake ports 53 and forces the exhaust gases out of the cylinder 19 through the exhaust ports 54. In this connection, it is to be noted that when the piston 28 completes its power stroke and starts on its compression stroke, the reed type valve 48 is opened by the suction created in the crankcase to admit another charge of fuel mixture into the upper portion of the crankcase through the port 46. The opposed reed type valve 49 remains closed during the above operation because the piston 29 is moving inwardly in the cylinder 20 on its combined power and suction stroke. However, as soon as the movement of the piston 29 is reversed, the reed type valve 49 opens to admit fuel mixture into the lower portion of the crankcase through the port 47.

As fuel mixture is admitted into the crankcase by the intake manifold 36, raw fuel and lubricant in the mixture has a tendency to drop out of suspension. The raw fuel falling out of suspension in the fuel mixture admitted to the upper regions of the crankcase is accumulated on the surfaces 70 and 71. This raw fuel is conducted by passages 72 to an annular groove 73 formed in the periphery of the liner 18 for the intermediate main bearing 17 and is discharged back into the Venturi passage 44 through a passage 74, which is reduced at the delivery end 75 to meter the amount of raw fuel admitted to the venturi. The raw fuel is propelled through the above passages 70 and 71 by the combined action of the piston 28 on its suction stroke and by the actual flow of fuel mixture through the ports 46 and 47. In this connection it will be noted that as the fuel mixture flows through the above ports, it creates a suction in the passage 74 tending to draw the raw fuel into the Venturi passage 44. In actual practice, it has been found that the above arrangement not only returns the raw fuel to the intake manifold, but in addition, actually serves to prime the engine during starting of the latter.

The raw fuel falling out of the fuel mixture in the lower regions of the crankcase is accumulated on the surface 77 immediately below the piston 29 and is conducted by a passage 78 to an annular groove 79 formed in the liner 18 for the bottom main bearing 16. As shown in Figure 2 of the drawings, the annular groove 79 communicates with the upper ends of a longitudinally extending groove 80 also formed in the periphery of the liner 18. The groove 80 communicates with a well 81, which also serves to collect raw fuel discharged into the crankcase through the outlet port 47 in the Venturi passage.

The longitudinal groove 80 communicates with the lower end of a passage 82 having the upper end communicating with the Venturi passage 44 at the bottom side of the latter. The delivery end 83 of the passage 82 is also reduced to meter the amount of raw fuel discharged into the Venturi passage. The intake manifold 36 is provided with a passage 84 diametrically opposite the passage 82 and communicating at the upper end with an annular groove 85 formed in the inner surface of the liner 18 for the top main bearing 15. In this connection it will be noted that the annular groove 85 is located adjacent the upper end of the liner 18 and the inner diameter of the liner beyond the groove is enlarged somewhat to communicate with the atmosphere.

Thus a certain amount of air is drawn into the passage 84 and any raw fuel or lubricant tending to escape along the upper end of the crankshaft 13 is bypassed into the passage 84. This fluid is discharged back into the Venturi passage 44 through the delivery end 86 of the passage 84, which is reduced to meter the amount of raw fuel discharged into the venturi. It will be noted that in every instance the amount of raw fuel, including lubricant, returned to the Venturi passage 44 is metered, so that the balance of the fuel mixture is not seriously disturbed or changed.

Figure 7 of the drawings illustrates a modified intake manifold 90 similar in construction to the intake manifold 36 with the following exceptions. As shown the cylindrical portion of the manifold 90 is provided with a radial bore 91 having the inner end opening into the venturi 44 and adapted to receive a plug 92. The plug 92 has a radial passage 93 which communicates at its inner end with the venturi 44 and at its outer end with a passage 94. The passage 94 registers with an auxiliary passage 95 in the carburetor housing 96. In accordance with conventional practice, the passage 95 communicates with the fuel mixing chamber of the carburetor beyond the usual throttle valve (not shown) and functions as a low speed jet when the throttle valve is closed. In other words, when the throttle valve is closed, a limited amount of fuel mixture is bypassed through the passage 95 into the passages 93 and 94. Inasmuch as the passage 93 communicates with the venturi 44, it follows that the engine may be operated at low speed even though the throttle valve in the carburetor is closed. In this connection it will be noted that the lower end of the plug 92 projects into the venturi and is shaped to insure a uniform distribution of the fuel mixture between the ports 46 and 47 in the intake manifold. It will also be noted that the intake manifold is provided with a passage 97 which corresponds to the passage 82 in the manifold 36 and that the plug 92 has a radial passage 98, which corresponds to the passage 84 in the manifold 36.

In Figures 8 to 10 inclusive, I have illustrated still another form of intake manifold. This manifold is indicated by the reference character 99 and differs from the manifold 36 in that the portion which is insertable into the opening in the crankcase of the engine is tapered as indicated by the reference character 100. When using this manifold, the inner surface of the opening through the crankcase is correspondingly tapered and a gasket 101 is preferably provided between the inner wall 42 of the rib 41 and the adjacent surface 43 of the intermediate main bearing 17. This gasket insures effectively sealing the joint between the inner wall 42 and the surface 43 of the main bearing. It will also be noted that the fuel mixture dividing partition 52 on the rib 41 is provided with an axial bore 102, which corresponds to the bore 74, except that it is somewhat larger in diameter, to receive a tube 103. The tube 103 projects inwardly through the gasket 101 and prevents any possibility of plugging the passage with portions of the gasket when the latter is placed under compression. It will further be observed that the bore 102 communicates with the fuel mixture passage in the manifold through a pair of passages 104 and 105. These passages respectively open through the top and bottom sides of the V-shaped partition 52, so as

to uniformly distribute the fuel to the ports 46 and 47 in the manifold.

Upon reference to Figure 9 of the drawings, it will be noted that a pair of air-bleed passages 106 and 107 respectively open through the top and bottom walls of the rib 41 adjacent the free ends of the reed valves. The outer ends of the passages open through the periphery of the radial flange 108 on the manifold and restrictions 109 are provided in the passages to enable supplying predetermined amounts of additional air in the upper and lower regions of the crankcase when required.

In Figure 11 of the drawings, I have shown a construction similar to the one shown in Figure 2 of the drawings, except that the carburetor is formed with an auxiliary venturi 110. This venturi is positioned in advance of the Venturi passage 44 and assists in maintaining fuel mixture velocities so that practically no fuel particles drop out of suspension in the fuel mixture as the latter flows into the intake manifold.

Thus from the foregoing, it will be apparent that I have provided a light-weight internal combustion engine composed of a relatively few simple parts capable of being inexpensively manufactured, assembled and installed. It will further be noted that the efficiency of the invention is substantially increased by providing means for collecting raw fuel including lubricant falling out of suspension from the fuel mixture and returning this fuel directly to the manifold or fuel mixture intake passage. This arrangement not only improves the efficiency of the engine by salvaging the raw fuel but, in addition, serves to prime the internal combustion engine during starting periods and thereby improves the starting characteristics of the engine. In addition to the above, it will be noted that extreme care is taken to insure a uniform distribution of fuel mixture between the cylinders of the engine and this not only contributes to improving the starting characteristics of the engine, but, in addition, results in obtaining smooth operation.

What I claim as my invention is:

1. An internal combustion engine having a crank case, means for introducing a fuel mixture into the crank case including an intake manifold having a passage through which fuel mixture flows into the crank case, means in the crank case for collecting raw fuel dropping out of suspension from the fuel mixture admitted to the crank case, and means responsive to the flow of fuel mixture through the passage in the intake manifold to by-pass the raw fuel back to the intake manifold.

2. An internal combustion engine having a crank case and having cylinders communicating at one end with the interior of the crank case, pistons respectively slidably supported in the cylinders, means for introducing a fuel mixture into the crank case including an intake passage, means for collecting raw fuel falling out of suspension from the fuel mixture admitted to the crank case, and means responsive to movement of the pistons in the cylinders in a direction toward the crank case to conduct raw fuel from the collecting means to the intake passage.

3. An internal combustion engine having a casing, means for introducing a fuel mixture into the casing including an intake manifold having a venturi communicating with the interior of the casing, means for collecting raw fuel dropping out of suspension from the fuel mixture admitted to the casing, and means for returning the raw fuel to the intake manifold including a passage

extending from the collecting means to the venturi.

4. An internal combustion engine having a crankcase, means for introducing a fuel mixture into the crank case including an intake passage having a venturi communicating with the interior of the crank case, means for collecting raw fuel dropping out of suspension from the raw fuel admitted to the crank case, and means for returning the raw fuel to the intake passage including a passage extending from the collecting means and communicating with the venturi through one side of the latter.

5. An internal combustion engine having a casing, means for introducing a fuel mixture into the casing including an intake passage having a venturi communicating with the interior of the casing, means for collecting raw fuel dropping out of suspension from the raw fuel admitted to the casing, and means for returning the raw fuel to the intake passage including a passage extending from the collecting means and having a reduced end communicating with the venturi to restrict the quantity of fuel entering the venturi from the collecting means.

6. An internal combustion engine having a crank case, means for introducing a fuel mixture into the crank case including an intake passage having a venturi communicating with the interior of the crank case, means for collecting raw fuel dropping out of suspension from the raw fuel admitted to the crank case, and diametrically opposed passages connecting opposite sides of the venturi to the collecting means.

7. An internal combustion engine having a crank case and having superimposed cylinders communicating at their inner ends with the interior of the crank case, a piston slidably supported in each cylinder, means for introducing fuel mixture into the crank case including an intake passage, means at the underside of each cylinder for collecting raw fuel dropping out of suspension from the fuel mixture admitted to the crank case, and means responsive to the movement of the pistons in the respective cylinders in a direction toward the crank case to conduct raw fuel from the collecting means to the intake passage.

8. An internal combustion engine having a crank shaft, bearings for the crank shaft, a crank case for the shaft, means for supplying fuel mixture to the crank case including an intake passage, means for collecting fuel escaping along the bearings, and means for conducting fuel from the collecting means to the intake passage.

9. An internal combustion engine having a crankshaft, a crankcase for the shaft, means for supplying fuel mixture to the crankcase including an intake passage, bearings for the shaft having means for collecting fuel escaping along the bearings, and means for returning the fuel collected by said means to the intake passage including a passage extending from the collecting means to diametrically opposite sides of the passage.

10. An internal combustion engine having a crankcase, means for introducing a fuel mixture into the crankcase including an intake passage having a venturi communicating with the interior of the crankcase, means for collecting raw fuel dropping out of suspension from the fuel mixture admitted to the crankcase, and diametrically opposed correspondingly restricted passages connecting opposite sides of the venturi to the collecting means.

11. An internal combustion engine having a casing provided with an opening through one wall, an intake manifold removably clamped to said wall and having a portion projecting into the casing through the opening in said wall, an intake passage for fuel mixture formed in the manifold and having opposed outlet ports in opposite side walls of said projecting portion, and means for independently controlling the flow of fuel mixture through the outlet ports including reed type valve members having corresponding ends respectively secured to opposite sides of the projecting portion aforesaid and extending over said outlet ports.

12. An internal combustion engine having a casing provided with an opening through one wall, an intake manifold removably clamped to said wall and having a portion projecting into the casing through the opening in said wall, an intake passage for fuel mixture formed in the manifold and having opposed outlet ports in opposite side walls of said projecting portion, means in the path of travel of the fuel mixture flowing through said passage for directing uniform quantities of the fuel mixture through the outlet ports, and valve members respectively supported on the projecting portion at opposite sides of the latter for controlling the flow of fuel mixture through the ports.

13. An internal combustion engine having a casing provided with an opening through one wall, an intake manifold removably clamped to said wall and having a portion projecting into the casing through the opening in said wall, an intake passage for fuel mixture formed in the manifold and having opposed outlet ports in opposite side walls of said projecting portion, means in the path of travel of the fuel mixture flowing through said passage for directing uniform quantities of the fuel mixture through the outlet ports, valve members respectively supported on opposite sides of the projecting portion for controlling the flow of fuel mixture through the outlet ports, and a restricted passage in the fuel directing means connecting the intake passage to the interior of the casing.

14. An internal combustion engine having a casing provided with an opening through one wall, an intake manifold removably clamped to said wall and having a portion projecting into the casing through the opening in said wall, an intake passage for fuel mixture formed in the manifold and having opposed outlet ports in opposite side walls of said projecting portion, a projection on the end wall of the projecting portion extending into the intake passage and having diverging walls for directing fuel mixture flowing through the passage in opposite directions toward the outlet ports, and valve members respectively supported on opposite sides of the projecting portion for controlling the flow of fuel mixture through the outlet ports.

15. An internal combustion engine having a casing provided with an opening through one wall, an intake manifold removably clamped to said wall and having a portion projecting into the casing through the opening in said wall, an intake passage for fuel mixture formed in the manifold and having opposed outlet ports in opposite side walls of said projecting portion, a projection on the end wall of the projecting portion extending into the intake passage and having diverging walls for directing fuel mixture flowing through the passage in opposite directions toward the outlet ports, restricted passages

respectively extending from the diverging walls of the projection to the interior of the casing, and valve members respectively supported on opposite sides of the projecting portion for controlling the flow of fuel mixture through the outlet ports.

16. An internal combustion engine having a crankshaft, a crankcase for the shaft, bearings for the shaft at opposite ends of the crankcase, an intake manifold removably secured to one wall of the crankcase and having a portion projecting into the crankcase, an intake passage for fuel mixture formed in the manifold and having opposed outlet ports in opposite side walls of said projecting portion, diametrically opposed restricted passages in the manifold having the inner ends communicating with the intake passage at opposite sides of the latter and having the outer ends respectively arranged to receive fuel tending to escape through said bearings.

17. An internal combustion engine having a crankcase provided with an opening through one wall thereof, a bearing member located in the crankcase opposite the opening and having a flat surface adjacent said opening, an intake manifold removably clamped to said wall and having a portion projecting into the crankcase through the opening in said wall, said projecting portion having a flat end wall abutting the flat surface on the bearing member and dividing the crankcase into two spaced portions, an intake passage for fuel mixture formed in the manifold and having opposed outlet ports in opposite side walls of said projecting portion for respectively admitting fuel mixture to the spaced portions in the crankcase, and valve members respectively supported on opposite sides of the projecting portion for controlling the flow of fuel mixture through the outlet ports.

18. An internal combustion engine having superimposed cylinders, a crankcase communicating with the lower ends of the cylinders and having an opening through the wall thereof opposite the cylinders, a bearing in the crankcase between the cylinders and having a flat surface adjacent the opening, an intake manifold removably clamped to said wall and having a portion projecting into the crankcase through the opening in said wall, said projecting portion having a flat end wall abutting the flat surface on the bearing to divide the crankcase into upper and lower portions, an intake passage for fuel mixture formed in the manifold and having opposed outlet ports in opposite side walls of said projecting portions for respectively admitting fuel mixture to the upper and lower portions of the crankcase, means in the path of travel of the fuel mixture flowing through said passage for directing the fuel mixture in opposite directions toward the inlet and outlet ports, and valve members respectively supported on opposite sides of the projecting portion for controlling the flow of fuel mixture through the outlet ports.

19. An internal combustion engine having a casing provided with an opening through one wall thereof, an intake manifold removably clamped to said wall and having a portion projecting into the casing through the opening in said wall, an intake passage for fuel mixture formed in the manifold and having opposed outlet ports in opposite side walls of said projecting portion, means for by-passing air directly into the casing including passages formed in the intake manifold and having the delivery ends respectively communicating with the interior of the casing through the opposite sides of the projecting portion, and valve members respectively supported on the opposite sides aforesaid of the projecting portion for controlling the flow of fuel mixture through the outlet ports and for controlling the entrance of air into the casing from said air passages.

20. An internal combustion engine comprising a crank casing having a cylinder provided with an intake port adjacent the outer end thereof and having a fuel mixture passage extending along the cylinder at one side of the latter for communication with the intake port, the wall of the casing opposite the cylinder having an opening therethrough in registration with the intake port, and a cap for said opening having a portion forming the outer end wall of said passage.

JAY W. SMITH.

REFERENCES CITED

The following references are of record in the file of this patent:

UNITED STATES PATENTS

Number	Name	Date
1,490,305	Andrews	Apr. 15, 1924
1,845,702	Evinrude	Feb. 16, 1932
2,079,571	Johnson	May 4, 1937
2,185,506	Johnson	Jan. 2, 1940

FOREIGN PATENTS

Number	Country	Date
564,286	France	1923