United States Patent

[11] **3,568,881**

[72] Inventor **Francis M. Croney**
Euless, Tex.

[21] Appl. No. **750,340**
[22] Filed **Aug. 5, 1968**
[45] Patented **Mar. 9, 1971**

[73] Assignee **Devmar, Inc.**
Arlington, Tex.

[54] **LABEL DISPENSING DEVICE**
7 Claims, 4 Drawing Figs.

[52] **U.S. Cl.** **221/13,** 221/73
[51] **Int. Cl.** **G07f 11/00**
[50] **Field of Search** ..... 221/71-—73, 9, 13

[56] **References Cited**

UNITED STATES PATENTS

2,754,994	7/1956	Cole	221/73
3,033,417	5/1962	Van Meer	221/13
3,107,814	10/1963	Auger et al.	221/73
3,169,895	2/1965	Sohn	221/73X
3,222,242	12/1965	Ingalls et al.	221/73X
3,343,715	9/1967	Edwards	221/13

FOREIGN PATENTS

1,155,390	10/1965	Germany	221/73

Primary Examiner—Samuel F. Coleman
Attorney—Parker & Carter

ABSTRACT: A label dispensing machine for separating pressure sensitive adhesive coated labels from a continuous backing tape and delivering the labels to a removal station upon demand. The labels are separated from the continuous backing tape by means which pulls the backing tape away from the labels as the labels are fed to a support roller contiguous to the removal station. The backing tape and its attached labels are fed through the dispensing machine by a driving means which engages the backing tape. The driving means is actuated by an electric eye means which is associated with the label removal station. The electronic circuit between the electric eye means and the drive motor is designed so as not to be adversely affected by changes in voltage.

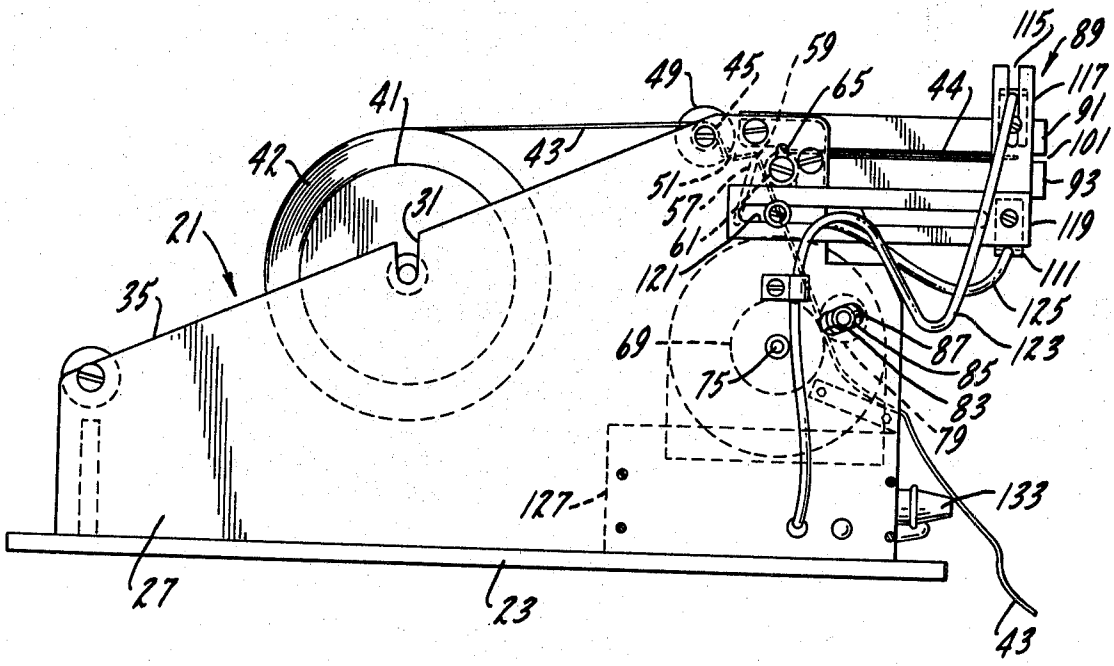

PATENTED MAR 9 1971

3,568,881

SHEET 1 OF 2

Fig. 1.

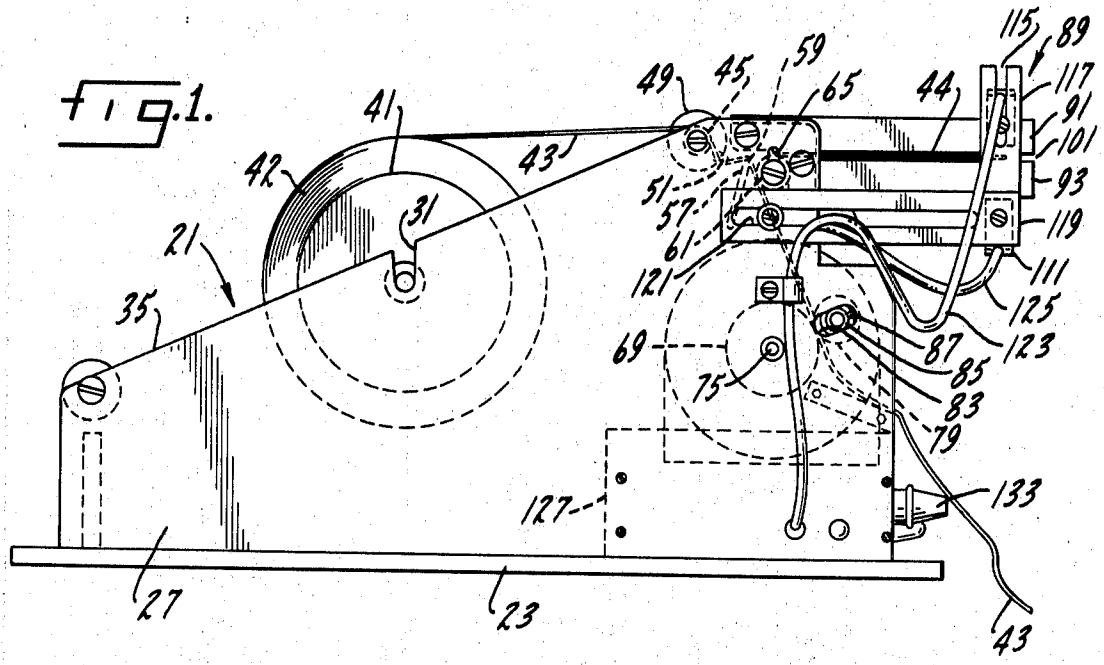

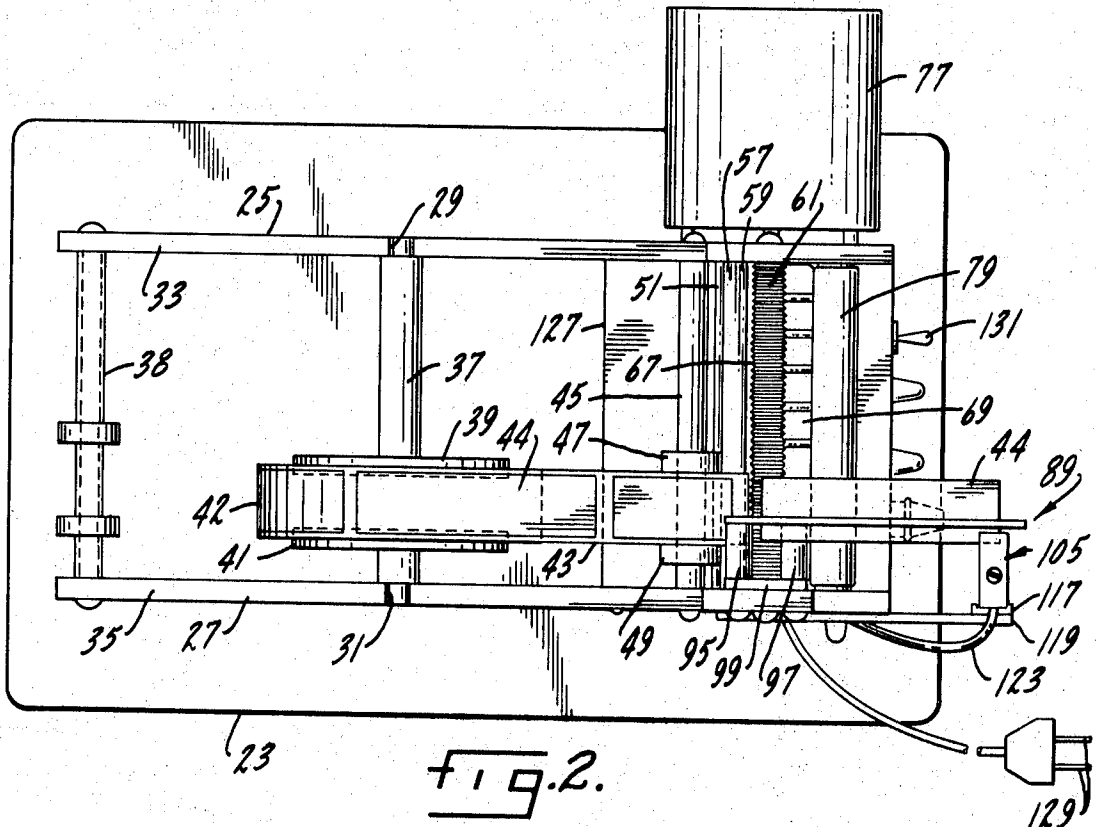

Fig. 2.

INVENTOR.
Francis M. Croney
BY Parker & Carter
Attorneys.

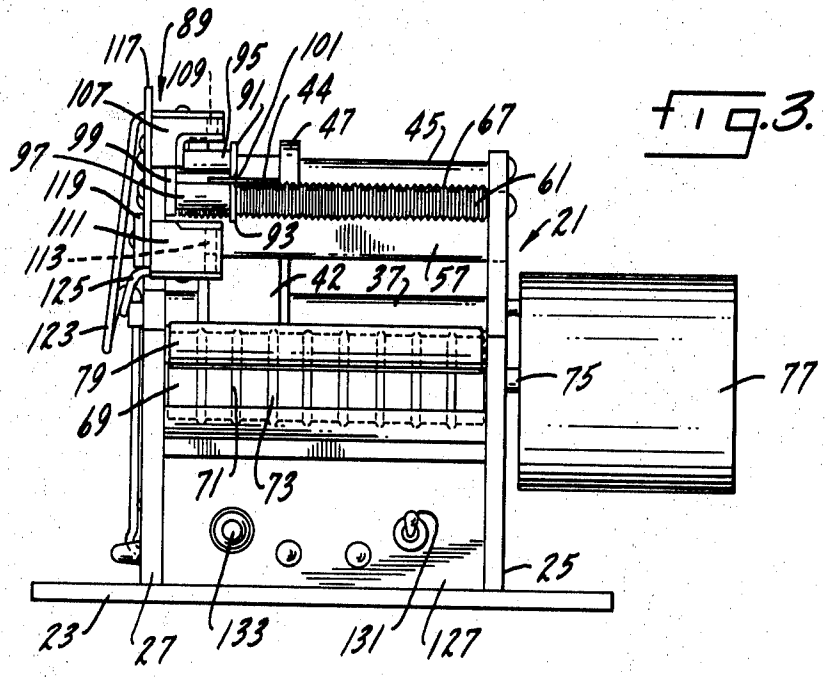

fig. 3.

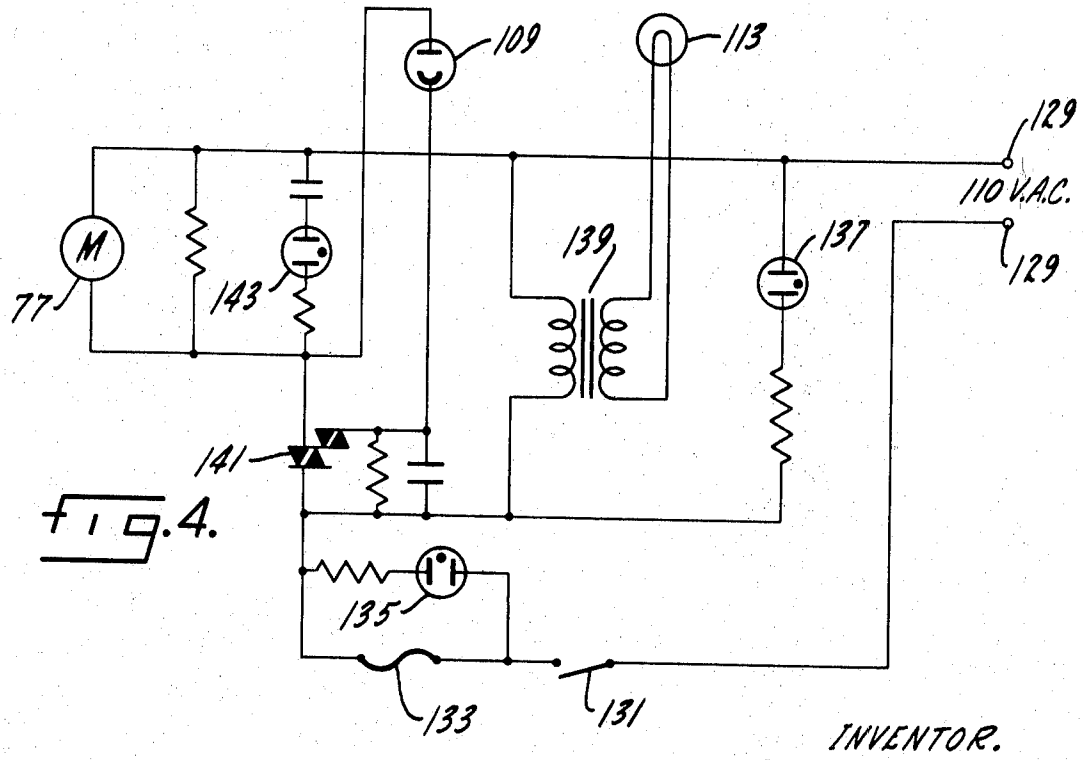

fig. 4.

INVENTOR.
Francis M. Croney
BY Parker & Carter
Attorneys.

LABEL DISPENSING DEVICE

SUMMARY OF THE INVENTION

This invention is concerned with a label dispensing machine and more particularly with a machine that automatically separates labels from a continuous backing tape and delivers these labels upon demand to a label removal station.

An object of this invention is a dispensing machine for automatically separating labels having a pressure sensitive adhesive from a continuous backing tape and delivering the separated labels on demand to a removal station.

Another object is a label dispensing machine arranged so that removal of a label from the removal station automatically actuates the machine to supply another label to the removal station.

Another object is a label dispensing machine in which a label is held separated from its backing tape until it is ready to be used.

Another object is a label dispensing machine having an automatic feed mechanism which is relatively unaffected by variations in electrical voltage.

Other objects will be found in the following specification, claims and drawings.

BRIEF DESCRIPTION OF THE DRAWINGS

The invention is illustrated more or less diagrammatically in the following drawings wherein:

FIG. 1 is a side elevational view of a label dispensing machine embodying the novel features of this invention;

FIG. 2 is a top plan view of the structure of FIG. 1;

FIG. 3 is a front elevational view of the structure of FIG. 1; and

FIG. 4 is a schematic diagram of the electrical circuitry of the label dispensing machine.

DESCRIPTION OF THE PREFERRED EMBODIMENT

In the drawings, the preferred embodiment of the invention is shown including a housing **21** having a base **23** with upstanding sidewalls **25** and **27** mounted thereon. Aligned notches **29** and **31** are formed respectively in the sloping top edges **33** and **35** of the sidewalls **25** and **27**. The notches act as bearings to receive a roll support axle **37**. An additional roll support axle **38** is located adjacent the low ends of the sidewalls. Discs **39** and **41** are movable along the length of the axle **37** to position a roll **42** of backing tape **43** and labels **44**. A cylindrical tape guide **45** extends between the sidewalls **25** and **27** adjacent the top thereof. Tape guide discs **47** and **49** are spaced along the length of said guide. A tape guide rod **51** extends between the sidewalls **25** and **27** adjacent to the guide **45** but is spaced closer to the base **23** than is the guide **45**. Notches (not shown) are formed respectively in the discs **47** and **49** and receive the rod **51** to prevent rotation of the discs **47** and **49** relative to the guide **45**. The diameter of the guide rod **51** is relatively small in comparison to the diameter of the tape guide **45**.

A label **44** and backing tape **43** separating member **57** extends between the sidewalls **25** and **27**. This member is flat and rectangular and has a rounded longitudinally extending edge **59**. The edge **59** is spaced from the tape guide rod **51** and is located farther from the base **23** than the lower surface of said tape guide rod. The circumference of said rounded edge **59** is approximately equal to the circumference of the tape guide rod **51**. The horizontal spacing between the tape guide rod **51** and the rounded edge **59** of the label and tape separating member **57** is generally less than the length of a label in a direction along the path of movement of the tape **43**. A label support member **61** extends between the sidewalls **25** and **27** and is positioned adjacent the label separating member **57**. This support member is fastened in slots **65** in the sidewalls **25** and **27** to enable it to be moved towards and away from the base **23**. The label support member has a surface **67** consisting of lands formed as part of a screw thread. This surface presents minimum contact with a label passing thereover. The spacing between the threaded surface **67** and the label separating member **59** is less than the length of a label in the direction of movement of the tape so that the label will be supported as it is separated from the backing tape **43**.

A backing tape drive roller **69** extends between the sidewalls **25** and **27** and is positioned between the label support means **61** and the base **23**. A plurality of circumferential grooves **71** are formed in the tape drive roller and are spaced along the length thereof. O-rings **73** are fitted in the grooves **71** and are positioned to engage the backing tape. A drive shaft **75** extending from an electric motor **77** is received in the drive roller **69** and is secured thereto in a suitable manner, such as by screws or the like. A pressure roller **79** extends between the sidewalls **25** and **27** adjacent to the drive roller **69** and mounted in slots **83** formed in the sidewalls to permit its adjustable positioning relative to the drive roller for varying the amount of pressure exerted on the tape. This is accomplished by journaling the roller in bearings **85** which can be moved along the length of the slots and held in selected positions by adjustment screws **87**.

The label removal station **89** includes upper and lower guide arms **91** and **93** that are cantileverly attached to the housing **21** by spacers **95** and **97** which connect to a bracket **99** secured to the sidewall **27**. The spacers are adjustable to center the guide arms in alignment with the center of a label **44**. The guide arms **91** and **93** are spaced apart vertically to provide a slot **101** for passage of the label. The entrance to the slot **101** is positioned adjacent the label support member **61**.

An electric eye assembly **105** is mounted on the housing **21** near the free ends of the guide arms **91**, **93** and on one side thereof. This assembly includes a housing **107** containing a photoelectric cell **109** and a housing **111** containing an incandescent lamp **113**. Housing **107** is movably affixed in a slot **115** formed in an upstanding support arm **117** and housing **111** is affixed in position to an arm **119** which is cantileverly connected to the upstanding sidewall **27** of the housing **21**. The arm **119** is equipped with a longitudinally extending slot **121** which permits adjustment of its connection to the sidewall of the housing for moving the housings **107** and **111** relative to the guide arms **91** and **93**. Electric wires **123** and **125** run respectively from the photoelectric cell **109** and the incandescent lamp **113** to the electronic circuit box **127**.

The electrical circuits for this dispensing machine are shown schematically in FIG. **4**. The circuits are supplied with 110-volt alternating current from plug prongs **129**. A switch **131** is provided in the circuit for energizing and deenergizing the dispensing machine. A fuse **133** is provided to prevent overloading of the circuits. A neon light **135** is connected in parallel with the fuse so that it will operate when the fuse blows to indicate that the fuse is blown. A second neon light **137** lights when the switch **131** is closed. The incandescent lamp **113** of the electric eye assembly **105** is connected to one side of a transformer **139** connected to the 110-volt supply **129**.

The electric drive motor **77** is connected to one side of the 110-volt circuit but isolated from the other side by a semiconductor **141** having a built-in triggering diode. The triggering diode of the semiconductor is actuated when the photoelectric cell receives light from the incandescent bulb. A suitable semiconductor for this purpose is sold under the trade name QUADRAC by Electronic Control Corporation, P.O. Box J, Euless, Texas. A third neon light **143** is provided to indicate when there is electrical feedback through the motor **77**.

The use, operation and function of this invention are as follows:

The embodiment of the invention shown and described herein is particularly adaptable for automatically dispensing labels to a discharge or removal station in which the removal of a label automatically actuates the dispenser to supply another label to the removal station. However, the principles of this invention may also be utilized in a dispensing machine in which the operation of the motor **77** is controlled by a hand or foot operated switch. Also, these principles may be applied

to a dispensing machine in which the tape drive roller is rotated by a lever and to a machine in which the labels and tape are moved through the machine by manually pulling on the backing tape.

The label dispensing mechanism of this invention is particularly suited for the separation of labels having a pressure sensitive adhesive on one side thereof and which are supplied attached to a continuous backing tape in rolled form. The labels are spaced apart from one another when attached to the backing tape. The roll **42** of backing tape **43** and labels **44** is mounted on the roll support axle **37**. Discs **39** and **41** may be moved into engagement with the sides of the roll to hold the roll in position.

The roll **42** of backing tape **43** and labels **44** is threaded through the dispenser by first removing sufficient labels from the leading edge of the backing tape to expose 5 or 6 inches of backing tape. The backing tape is then threaded over the cylindrical tape guide **45** and under the tape guide rod **51**. The discs **47** and **49** mounted on the cylindrical tape guide are moved into position adjacent the edges of the backing tape to hold it in alignment. The backing tape is then threaded over the label and backing tape separating member **57** and is threaded between the drive roller **69** and the pressure roller **79**.

When the switch **131** is placed in the "on" position, and if there is no label in the label removal station **89** between the incandescent bulb **113** and the photoelectric cell **109**, the incandescent lamp will shine light on the photoelectric cell. The current produced in the circuit due to the actuation of the photoelectric cell will trigger the semiconductor **141** to close the circuit, thereby permitting current from the 110-volt line **129** to flow to the electric motor **77**. Rotation of the motor will pull the backing tape through the dispenser until a label is moved through the guide arms **91** and **93** to a position which prevents the light from the incandescent bulb from shining on the photoelectric cell. When the photoelectric cell is deenergized, the semiconductor **141** will interrupt the flow of current to the motor **77**.

Separation of the labels from the backing tape takes place as the forward portion of each label passes over the rounded edge **59** of the label and backing tape separating member **57**. The trailing portion of the label will usually be beneath and engaged by the tape guide rod **51** although this is not necessary for separation of the labels from the backing tape and will not occur with very small labels. The backing tape and labels change direction by approximately 90° as they pass around the tape guide rod **51**. The rigidity of the label tends to maintain the label in a straight path towards the label support member **61** while the backing tape is being pulled downwardly and away from the label by the combination of the drive roller and pressure roller acting against the tape. The backing tape is changed approximately 90° in its direction of travel as it passes over the label separating member **57**. After a label is separated from the backing tape, it continues under its own momentum, and perhaps, with the assistance of a push from the following label, to move across the label support member and on to the label guide arm **93** where it blocks the light from the incandescent light **113** from falling on the photoelectric cell **109**. A label positioned in the label removal station **89** has one end portion blocking the electric eye assembly and the opposite end portion resting on the label support member **61**. Due to the threaded surface of the label support member, very little of this surface is in contact with the pressure sensitive adhesive affixed to the label. Consequently, it is not likely that the label will adhere to this support member. In a similar manner, the area of the guide arm **93** in contact with this adhesive is also very small, again minimizing the problem of the labels adhering to the guide arm.

I claim:

1. In a label dispensing machine for separating labels from a continuous backing tape and sequentially presenting labels at a label removal station, the improvement comprising:

a label removal station having a label support guide arm extending in the direction of movement of said labels and positioned to engage and support a separated label along a generally straight line area of contact;

a label and backing tape separating member;

a label support means positioned between said separating member and said label removal station; and

said label support means extending generally at right angles to the direction of movement of said labels and positioned to engage and support one end of a separated label when the label is supported by the guide arm of said removal station with said label support means having a plurality of spaced contact areas extending generally parallel to the direction of movement of the labels.

2. The structure of claim **1** further characterized in that the spacing between said label and backing tape separating member and said label support means is less than the length of a label along the direction of movement of the backing tape.

3. The structure of claim **1** further characterized in that said label support means is adjustable in a direction extending generally at right angles to the path of movement of the backing tape as it approaches said tape and label separating member.

4. The structure of claim **1** further characterized by a drive means adapted to engage the backing tape after it passes said label and backing tape separating member with said drive means adapted to pull said backing tape and label across said label and backing tape separator, means to selectively actuate and deactuate said drive means including means to start said drive means upon removal of a label from said label removal station and to stop said drive means upon delivery of another label to said label removal station.

5. The structure of claim **4** further characterized in that said means to start said drive means upon removal of a label from said label removal station and to stop said drive means upon delivery of another label to said label removal station includes a photoelectric cell and an incandescent lamp with such photoelectric cell controlling current to an electric motor connected to said drive means with said photoelectric cell arranged to activate said electric motor upon receipt of light from said incandescent lamp.

6. The structure of claim **5** further characterized in that said drive means includes a source of alternating current, a circuit connected to said source of alternating current, an electric motor located in said circuit, and a semiconductor controlling the flow of alternating current to said motor with said semiconductor being activated by current produced by said photoelectric cell.

7. The structure of claim **6** further characterized in that said semiconductor includes a built in triggering diode with said triggering diode activating the semiconductor when current is produced by the photoelectric cell.