(12) INTERNATIONAL APPLICATION PUBLISHED UNDER THE PATENT COOPERATION TREATY (PCT)

(19) World Intellectual Property Organization
International Bureau

(43) International Publication Date
22 June 2017 (22.06.2017)

WIPO | PCT

(10) International Publication Number
WO 2017/102264 A1

(51) International Patent Classification:
G03F 7/20 (2006.01)

(21) International Application Number:
PCT/EP2016/078445

(22) International Filing Date:
22 November 2016 (22.11.2016)

(25) Filing Language: English

(26) Publication Language: English

(30) Priority Data:
62/268,982 17 December 2015 (17.12.2015) US

(71) Applicant: **ASML NETHERLANDS B.V.** [NL/NL]; P.O. Box 324, 5500 AH Veldhoven (NL).

(72) Inventors: **MIDDLEBROOKS, Scott, Anderson**; P.O. Box 324, 5500 AH Veldhoven (NL). **ADAM, Omer, Abubaker, Omer**; P.O. Box 324, 5500 AH Veldhoven (NL). **KOOPMAN, Adrianus, Cornelis, Matheus**; P.O. Box 324, 5500 AH Veldhoven (NL). **MEGENS, Henricus, Johannes, Lambertus**; P.O. Box 324, 5500 AH Veldhoven (NL). **DEN BOEF, Arie, Jeffrey**; P.O. Box 324, 5500 AH Veldhoven (NL).

(74) Agent: **PETERS, John**; ASML Netherlands B.V, P.O. Box 324, 5500 AH Veldhoven (NL).

(81) Designated States *(unless otherwise indicated, for every kind of national protection available)*: AE, AG, AL, AM, AO, AT, AU, AZ, BA, BB, BG, BH, BN, BR, BW, BY, BZ, CA, CH, CL, CN, CO, CR, CU, CZ, DE, DJ, DK, DM, DO, DZ, EC, EE, EG, ES, FI, GB, GD, GE, GH, GM, GT, HN, HR, HU, ID, IL, IN, IR, IS, JP, KE, KG, KN, KP, KR, KW, KZ, LA, LC, LK, LR, LS, LU, LY, MA, MD, ME, MG, MK, MN, MW, MX, MY, MZ, NA, NG, NI, NO, NZ, OM, PA, PE, PG, PH, PL, PT, QA, RO, RS, RU, RW, SA, SC, SD, SE, SG, SK, SL, SM, ST, SV, SY, TH, TJ, TM, TN, TR, TT, TZ, UA, UG, US, UZ, VC, VN, ZA, ZM, ZW.

(84) Designated States *(unless otherwise indicated, for every kind of regional protection available)*: ARIPO (BW, GH, GM, KE, LR, LS, MW, MZ, NA, RW, SD, SL, ST, SZ, TZ, UG, ZM, ZW), Eurasian (AM, AZ, BY, KG, KZ, RU, TJ, TM), European (AL, AT, BE, BG, CH, CY, CZ, DE, DK, EE, ES, FI, FR, GB, GR, HR, HU, IE, IS, IT, LT, LU, LV, MC, MK, MT, NL, NO, PL, PT, RO, RS, SE, SI, SK, SM, TR), OAPI (BF, BJ, CF, CG, CI, CM, GA, GN, GQ, GW, KM, ML, MR, NE, SN, TD, TG).

[Continued on next page]

(54) Title: SOURCE SEPARATION FROM METROLOGY DATA

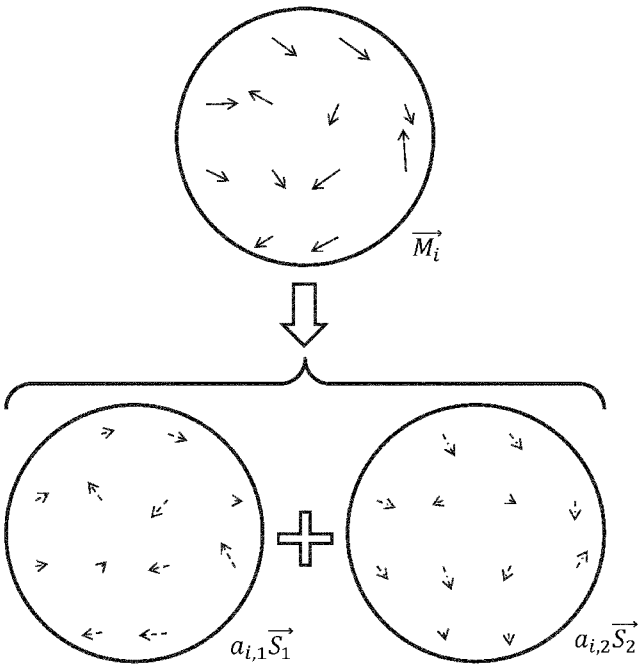

Fig. 7

(57) Abstract: Disclosed herein is a method and a computer program product that relates to lithographic apparatuses and processes, and more particularly to a method and computer program to inspect substrates produced by the lithographic apparatuses and processes. The method and/or computer program product comprise: determining, using a computer, contributions from independent sources from results measured from a lithography process or a substrate processed by the lithography process; wherein the results are measured using a plurality of different substrate measurement recipes.

WO 2017/102264 A1

Published:

— *with international search report (Art. 21(3))*

SOURCE SEPARATION FROM METROLOGY DATA

CROSS-REFERENCE TO RELATED APPLICATIONS

[0001] This application claims priority of US application 62/268,982 which was filed on December 17, 2015 and which is incorporated herein in its entirety by reference.

TECHNICAL FIELD

[0002] The description herein relates to lithographic apparatuses and processes, and more particularly to a tool and a method to inspect substrates produced by the lithographic apparatuses and processes.

BACKGROUND

[0003] A lithographic apparatus can be used, for example, in the manufacture of integrated circuits (ICs) or other devices. In such a case, a patterning device (e.g., a mask) may contain or provide a circuit pattern corresponding to an individual layer of the device ("design layout"), and this circuit pattern can be transferred onto a target portion (e.g. comprising one or more dies) on a substrate (e.g., silicon wafer) that has been coated with a layer of radiation-sensitive material ("resist"), by methods such as irradiating the target portion through the circuit pattern on the patterning device. In general, a single substrate contains a plurality of adjacent target portions to which the circuit pattern is transferred successively by the lithographic apparatus, one target portion at a time. In one type of lithographic apparatus, the circuit pattern on the entire patterning device is transferred onto one target portion in one go; such an apparatus is commonly referred to as a wafer stepper. In an alternative apparatus, commonly referred to as a step-and-scan apparatus, a projection beam scans over the patterning device in a given reference direction (the "scanning" direction) while synchronously moving the substrate parallel or anti-parallel to this reference direction. Different portions of the circuit pattern on the patterning device are transferred to one target portion progressively.

[0004] Prior to transferring the circuit pattern from the patterning device to the substrate, the substrate may undergo various procedures, such as priming, resist coating and a soft bake. After exposure, the substrate may be subjected to other procedures, such as a post-exposure bake (PEB), development, a hard bake and measurement/inspection of the transferred circuit pattern. This array of procedures is used as a basis to make an individual layer of a device, e.g., an IC. The substrate may then undergo various procedures such as etching, ion-implantation (doping), metallization, oxidation, chemo-mechanical polishing, etc., all intended to finish off the individual layer of the device. If several layers are required in the device, then some or all of these procedures or a variant thereof may be repeated for each layer. Eventually, a device will be present in each target portion on the substrate. If there are a plurality of

devices, these devices are then separated from one another by a technique such as dicing or sawing, whence the individual devices can be mounted on a carrier, connected to pins, etc.

SUMMARY

[0005] Disclosed herein is a method comprising: determining, using a computer, contributions from independent sources from results measured from a lithography process or a substrate processed by the lithography process; wherein the results are measured using a plurality of different substrate measurement recipes.

[0006] According to an embodiment, the method further comprises reducing a number of dimensions of the results.

[0007] According to an embodiment, reducing the number of dimensions comprises using principal component analysis (PCA).

[0008] According to an embodiment, the results are linear combinations of the contributions.

[0009] According to an embodiment, the method further comprises compiling the contributions into a matrix.

[0010] According to an embodiment, the results comprise overlay values obtained from a plurality of different locations.

[0011] According to an embodiment, the substrate measurement recipes differ in a parameter of a measurement the substrate measurement recipes conduct, or a parameter of a pattern measured by the substrate measurement recipes.

[0012] According to an embodiment, the contributions comprise a contribution from a true value of a characteristic measured by the substrate measurement recipes.

[0013] According to an embodiment, the method further comprises identifying the contribution from the true value.

[0014] According to an embodiment, the method further comprises determining the true value from the contribution from the true value.

[0015] According to an embodiment, identifying the contribution from the true value comprises verification with other data.

[0016] According to an embodiment, identifying the contribution from the true value comprises finding which of the contributions is consistent across the plurality of substrate measurement recipes.

[0017] According to an embodiment, the method further comprises determining accuracy of the substrate measurement recipes from the contributions.

[0018] Disclosed herein is a computer program product comprising a computer readable medium having instructions recorded thereon, the instructions when executed by a computer implementing any of

the above methods.

BRIEF DESCRIPTION OF THE DRAWINGS

[0019] Fig. 1 is a block diagram of various subsystems of a lithography system.

[0020] Fig. 2A schematically depicts a method of predicting defects in a lithographic process.

[0021] Fig. 2B is schematic diagram of a dark field measurement apparatus for use in measuring targets according to embodiments of the invention using a first pair of illumination apertures providing certain illumination modes.

[0022] Fig. 2C is a schematic detail of a diffraction spectrum of a target for a given direction of illumination.

[0023] Fig. 2D is a schematic illustration of a second pair of illumination apertures providing further illumination modes in using a measurement apparatus for diffraction based overlay measurements.

[0024] Fig. 2E is a schematic illustration of a third pair of illumination apertures combining the first and second pairs of apertures providing further illumination modes in using a measurement apparatus for diffraction based overlay measurements.

[0025] Fig. 2F depicts a form of multiple periodic structure (e.g., multiple grating) target and an outline of a measurement spot on a substrate.

[0026] Fig. 2G depicts an image of the target of Fig. 2F obtained in the apparatus of Fig. 2B.

[0027] Fig. 3 schematically shows a substrate with two distinct targets P and Q, where copies of each are placed in four different areas of the substrate.

[0028] Fig. 4A and Fig. 4B demonstrate how the same target may introduce different systematic errors in different substrate measurement recipes.

[0029] Fig. 5 schematically shows the combination of contributions from various sources (such as the systematic errors and the true value) in a set of measurement results.

[0030] Fig. 6 schematically shows twelve overlay values measured at different locations on a substrate, as examples of the results in Fig. 5.

[0031] Fig. 7 schematically shows that the twelve overlay values, the true values of the overlay, and the contribution from the asymmetry may be plotted as maps (i.e., as a function of locations).

[0032] Fig. 8 schematically shows a flow chart for a method of determining contributions from different sources in a set of results measured from a lithography process or a substrate processed by the lithography process, according to an embodiment.

[0033] Fig. 9 schematically shows that the contribution from the true value may be identified from the measurement among the contributions determined in Fig. 8, according to an embodiment.

[0034] Fig. 10 schematically shows that accuracy of the substrate measurement recipes used to obtain

the results in Fig. 8 may be determined from the contributions or the matrix determined in the flow of Fig. 8, according to an embodiment.

[0035] Fig. 11A, Fig. 11B and Fig. 11C each show normalized contributions (vertical axes) from three sources in results obtained using sixteen different substrate measurement recipes (horizontal axes).

[0036] Fig. 12 is a block diagram of an example computer system.

[0037] Fig. 13 is a schematic diagram of a lithographic apparatus.

[0038] Fig. 14 is a schematic diagram of another lithographic apparatus.

[0039] Fig. 15 is a more detailed view of the apparatus in Fig. 14.

DETAILED DESCRIPTION

[0040] Although specific reference may be made in this text to the manufacture of ICs, it should be explicitly understood that the description herein has many other possible applications. For example, it may be employed in the manufacture of integrated optical systems, guidance and detection patterns for magnetic domain memories, liquid-crystal display panels, thin-film magnetic heads, etc. The skilled artisan will appreciate that, in the context of such alternative applications, any use of the terms "reticle", "wafer" or "die" in this text should be considered as interchangeable with the more general terms "mask", "substrate" and "target portion", respectively.

[0041] In the present document, the terms “radiation” and “beam” are used to encompass all types of electromagnetic radiation, including ultraviolet radiation (e.g. with a wavelength of 365, 248, 193, 157 or 126 nm) and EUV (extreme ultra-violet radiation, e.g. having a wavelength in the range 5-20 nm).

[0042] The term “optimizing” and “optimization” as used herein mean adjusting an apparatus, e.g., a lithographic apparatus, such that device fabrication results and/or processes (e.g., of lithography) have one or more desirable characteristics, such as higher accuracy of projection of a design layout on a substrate, larger process window, etc.

[0043] As a brief introduction, Fig. 1 illustrates an exemplary lithographic apparatus 10A. Major components include illumination optics which define the partial coherence (denoted as sigma) and which may include optics 14A, 16Aa and 16Ab that shape radiation from a radiation source 12A, which may be a deep-ultraviolet excimer laser source or other type of source including an extreme ultra violet (EUV) source (as discussed herein, the lithographic apparatus itself need not have the radiation source); and optics 16Ac that project an image of a patterning device pattern of a patterning device 18A onto a substrate plane 22A. An adjustable filter or aperture 20A at the pupil plane of the projection optics may restrict the range of beam angles that impinge on the substrate plane 22A, where the largest possible angle defines the numerical aperture of the projection optics $NA=\sin(\Theta_{max})$.

[0044] In a lithographic apparatus, projection optics direct and shape the illumination from a source

via a patterning device and onto a substrate. The term "projection optics" is broadly defined here to include any optical component that may alter the wavefront of the radiation beam. For example, projection optics may include at least some of the components 14A, 16Aa, 16Ab and 16Ac. An aerial image (AI) is the radiation intensity distribution at substrate level. A resist layer on the substrate is exposed and the aerial image is transferred to the resist layer as a latent "resist image" (RI) therein. The resist image (RI) can be defined as a spatial distribution of solubility of the resist in the resist layer. A resist model can be used to calculate the resist image from the aerial image, an example of which can be found in U.S. Patent Application Publication No. US 2009-0157630, the disclosure of which is hereby incorporated by reference in its entirety. The resist model is related only to properties of the resist layer (e.g., effects of chemical processes that occur during exposure, post-exposure bake (PEB) and development). Optical properties of the lithographic apparatus (e.g., properties of the source, the patterning device and the projection optics) dictate the aerial image. Since the patterning device used in the lithographic apparatus can be changed, it is desirable to separate the optical properties of the patterning device from the optical properties of the rest of the lithographic apparatus including at least the source and the projection optics.

[0045] As shown in Fig. 2A, the lithographic apparatus LA may form part of a lithographic cell LC, also sometimes referred to as a lithocell or lithocluster, which also includes apparatus to perform one or more pre- and post-exposure processes on a substrate. Conventionally these include one or more spin coaters SC to deposit a resist layer, one or more developers DE to develop exposed resist, one or more chill plates CH and one or more bake plates BK. A substrate handler, or robot, RO picks up a substrate from input/output ports I/O1, I/O2, moves it between the different process devices and delivers it to the loading bay LB of the lithographic apparatus. These devices, which are often collectively referred to as the track, are under the control of a track control unit TCU which is itself controlled by the supervisory control system SCS, which also controls the lithographic apparatus via lithographic control unit LACU. Thus, the different apparatus may be operated to maximize throughput and processing efficiency. The lithographic cell LC may further comprises one or more etchers to etch the substrate and one or more measuring devices configured to measure a parameter of the substrate. The measuring device may comprise an optical measurement device configured to measure a physical parameter of the substrate, such as a scatterometer, a scanning electron microscope, etc.

[0046] In a semiconductor device fabrication process (e.g., lithography process), a substrate may be subjected to various types of measurement during or after the process. The measurement may determine whether a particular substrate is defective, may establish adjustments to the process and apparatuses used in the process (e.g., aligning two layers on the substrate or aligning the mask to the substrate), may measure the performance of the process and the apparatuses, or may be for other purposes. Examples of

substrate measurement include optical imaging (e.g., optical microscope), non-imaging optical measurement (e.g., measurement based on diffraction such as ASML YieldStar, ASML SMASH GridAlign), mechanical measurement (e.g., profiling using a stylus, atomic force microscopy (AFM)), non-optical imaging (e.g., scanning electron microscopy (SEM)). The SMASH (SMart Alignment Sensor Hybrid) system, as described in U.S. Pat. No. 6,961,116, which is incorporate by reference herein in its entirety, employs a self-referencing interferometer that produces two overlapping and relatively rotated images of an alignment marker, detects intensities in a pupil plane where Fourier transforms of the images are caused to interfere, and extracts the positional information from the phase difference between diffraction orders of the two images which manifests as intensity variations in the interfered orders. In order to obtain useful data, a substrate measurement recipe should be both sufficiently accurate and precise.

[0047] The term "substrate measurement recipe" may include parameters of the measurement itself, parameters of the patterns measured, or both. For example, if the measurement used in a substrate measurement recipe is non-imaging diffraction-based optical measurement, the parameters of the measurement may include the wavelength, the polarization, the incident angle relative to the substrate, the relative orientation relative to a pattern on the substrate, of the light diffracted. The patterns measured may be patterns whose diffraction is measured. The patterns measured may be patterns specially designed for measurement purposes (also known as "targets" or "target structures"). Multiple copies of a target may be placed on many places on a substrate. The parameters of the patterns measured may include the shape, orientation and size of these patterns. A substrate measurement recipe may be used to align a layer of patterns being imaged against existing patterns on a substrate. A substrate measurement recipe may be used to align the mask to the substrate, by measuring the relative position of the substrate.

[0048] A substrate measurement recipe may be expressed in a mathematical form: $(r_1, r_2, r_3, \ldots r_n; t_1, t_2, t_3, \ldots t_n)$, where r_i are parameters of the measurement and t_j are parameters of the patterns measured. Fig. 3 schematically shows a substrate with two distinct targets P and Q, where copies of each are placed in four different areas of the substrate. The targets may include gratings, e.g., of mutually perpendicular directions. The substrate of Fig. 3 may be subjected to measurement using two substrate measurement recipes A and B. Substrate measurement recipes A and B at least differ on the target measured (e.g., A measures target P and B measures target Q). Substrate measurement recipes A and B may also differ on the parameters of their measurement. Substrate measurement recipes A and B may not even be based on the same measurement technique. For example recipe A may be based on SEM measurement and recipe B may be based on AFM measurement.

[0049] A target used by a scatterometer may comprise a relatively large periodic structure layout (e.g., comprising one or more gratings), e.g., 40 μm by 40 μm. In that case, the measurement beam often has a

spot size that is smaller than the periodic structure layout (i.e., the layout is underfilled such that one or more of the periodic structures is not completely covered by the spot). This simplifies mathematical reconstruction of the target as it can be regarded as infinite. However, for example, so the target can be positioned in among product features, rather than in the scribe lane, the size of a target has been reduced, e.g., to 20 μm by 20 μm or less, or to 10 μm by 10 μm or less. In this situation, the periodic structure layout may be made smaller than the measurement spot (i.e., the periodic structure layout is overfilled). Typically such a target is measured using dark field scatterometry in which the zeroth order of diffraction (corresponding to a specular reflection) is blocked, and only higher orders processed. Examples of dark field metrology can be found in PCT patent application publication nos. WO 2009/078708 and WO 2009/106279, which are hereby incorporated in their entirety by reference. Further developments of the technique have been described in U.S. patent application publications US2011/0027704, US2011/0043791 and US2012/0242970, which are hereby incorporated in their entirety by reference. Diffraction-based overlay using dark-field detection of the diffraction orders enables overlay measurements on smaller targets. These targets can be smaller than the illumination spot and may be surrounded by product structures on a substrate. In an embodiment, multiple targets can be measured in one image.

[0050] In an embodiment, the target on a substrate may comprise one or more 1-D periodic gratings, which are printed such that after development, the bars are formed of solid resist lines. In an embodiment, the target may comprise one or more 2-D periodic gratings, which are printed such that after development, the one or more gratings are formed of solid resist pillars or vias in the resist. The bars, pillars or vias may alternatively be etched into the substrate. The pattern of the grating is sensitive to chromatic aberrations in the lithographic projection apparatus, particularly the projection system PL, and illumination symmetry and the presence of such aberrations will manifest themselves in a variation in the printed grating. Accordingly, the measured data of the printed gratings can be used to reconstruct the gratings. The parameters of the 1-D grating, such as line widths and shapes, or parameters of the 2-D grating, such as pillar or via widths or lengths or shapes, may be input to the reconstruction process, performed by processing unit PU, from knowledge of the printing step and/or other measurement processes.

[0051] A dark field metrology apparatus is shown in Fig. 2B. A target T (comprising a periodic structure such as a grating) and diffracted rays are illustrated in more detail in Fig. 2C. The dark field metrology apparatus may be a stand-alone device or incorporated in either the lithographic apparatus LA, e.g., at the measurement station, or the lithographic cell LC. An optical axis, which has several branches throughout the apparatus, is represented by a dotted line O. In this apparatus, radiation emitted by an output 11 (e.g., a source such as a laser or a xenon lamp or an opening connected to a source) is directed onto substrate W via a prism 15 by an optical system comprising lenses 12, 14 and objective lens 16.

These lenses are arranged in a double sequence of a 4F arrangement. A different lens arrangement can be used, provided that it still provides a substrate image onto a detector.

[0052] In an embodiment, the lens arrangement allows for access of an intermediate pupil-plane for spatial-frequency filtering. Therefore, the angular range at which the radiation is incident on the substrate can be selected by defining a spatial intensity distribution in a plane that presents the spatial spectrum of the substrate plane, here referred to as a (conjugate) pupil plane. In particular, this can be done, for example, by inserting an aperture plate 13 of suitable form between lenses 12 and 14, in a plane which is a back-projected image of the objective lens pupil plane. In the example illustrated, aperture plate 13 has different forms, labeled 13N and 13S, allowing different illumination modes to be selected. The illumination system in the present examples forms an off-axis illumination mode. In the first illumination mode, aperture plate 13N provides off-axis illumination from a direction designated, for the sake of description only, as 'north'. In a second illumination mode, aperture plate 13S is used to provide similar illumination, but from an opposite direction, labeled 'south'. Other modes of illumination are possible by using different apertures. The rest of the pupil plane is desirably dark as any unnecessary radiation outside the desired illumination mode may interfere with the desired measurement signals.

[0053] As shown in Fig. 2C, target T is placed with substrate W substantially normal to the optical axis O of objective lens 16. A ray of illumination I impinging on target T from an angle off the axis O gives rise to a zeroth order ray (solid line 0) and two first order rays (dot-chain line +1 and double dot-chain line -1). With an overfilled small target T, these rays are just one of many parallel rays covering the area of the substrate including metrology target T and other features. Since the aperture in plate 13 has a finite width (necessary to admit a useful quantity of radiation), the incident rays I will in fact occupy a range of angles, and the diffracted rays 0 and +1/-1 will be spread out somewhat. According to the point spread function of a small target, each order +1 and -1 will be further spread over a range of angles, not a single ideal ray as shown. Note that the periodic structure pitch and illumination angle can be designed or adjusted so that the first order rays entering the objective lens are closely aligned with the central optical axis. The rays illustrated in Fig. 2B and Fig. 2C are shown somewhat off axis, purely to enable them to be more easily distinguished in the diagram.

[0054] At least the 0 and +1 orders diffracted by the target on substrate W are collected by objective lens 16 and directed back through prism 15. Returning to Fig. 2B, both the first and second illumination modes are illustrated, by designating diametrically opposite apertures labeled as north (N) and south (S). When the incident ray I is from the north side of the optical axis, that is when the first illumination mode is applied using aperture plate 13N, the +1 diffracted rays, which are labeled +1(N), enter the objective lens 16. In contrast, when the second illumination mode is applied using aperture plate 13S the -1 diffracted rays (labeled -1(S)) are the ones which enter the lens 16. Thus, in an embodiment, measurement

results are obtained by measuring the target twice under certain conditions, e.g., after rotating the target or changing the illumination mode or changing the imaging mode to obtain separately the -1st and the +1st diffraction order intensities. Comparing these intensities for a given target provides a measurement of asymmetry in the target, and asymmetry in the target can be used as an indicator of a parameter of a lithography process, e.g., overlay error. In the situation described above, the illumination mode is changed.

[0055] A beam splitter 17 divides the diffracted beams into two measurement branches. In a first measurement branch, optical system 18 forms a diffraction spectrum (pupil plane image) of the target on first sensor 19 (e.g. a CCD or CMOS sensor) using the zeroth and first order diffractive beams. Each diffraction order hits a different point on the sensor, so that image processing can compare and contrast orders. The pupil plane image captured by sensor 19 can be used for focusing the metrology apparatus and/or normalizing intensity measurements of the first order beam. The pupil plane image can also be used for many measurement purposes such as reconstruction, which are not described in detail here.

[0056] In the second measurement branch, optical system 20, 22 forms an image of the target on the substrate W on sensor 23 (e.g. a CCD or CMOS sensor). In the second measurement branch, an aperture stop 21 is provided in a plane that is conjugate to the pupil-plane. Aperture stop 21 functions to block the zeroth order diffracted beam so that the image DF of the target formed on sensor 23 is formed from the -1 or +1 first order beam. The images captured by sensors 19 and 23 are output to image processor and controller PU, the function of which will depend on the particular type of measurements being performed. Note that the term 'image' is used here in a broad sense. An image of the periodic structure features (e.g., grating lines) as such will not be formed, if only one of the -1 and +1 orders is present.

[0057] The particular forms of aperture plate 13 and stop 21 shown in Fig. 2D and Fig. 2E are purely examples. In another embodiment of the invention, on-axis illumination of the targets is used and an aperture stop with an off-axis aperture is used to pass substantially only one first order of diffracted radiation to the sensor. In yet other embodiments, 2nd, 3rd and higher order beams (not shown) can be used in measurements, instead of or in addition to the first order beams.

[0058] In order to make the illumination adaptable to these different types of measurement, the aperture plate 13 may comprise a number of aperture patterns formed around a disc, which rotates to bring a desired pattern into place. Note that aperture plate 13N or 13S are used to measure a periodic structure of a target oriented in one direction (X or Y depending on the set-up). For measurement of an orthogonal periodic structure, rotation of the target through 90° and 270° might be implemented. Different aperture plates are shown in Fig. 2D and Fig. 2E. Fig. 2D illustrates two further types of off-axis illumination mode. In a first illumination mode of Fig. 2D, aperture plate 13E provides off-axis illumination from a direction designated, for the sake of description only, as 'east' relative to the 'north' previously described. In a second illumination mode of Fig. 2E, aperture plate 13W is used to provide

similar illumination, but from an opposite direction, labeled 'west'. Fig. 2E illustrates two further types of off-axis illumination mode. In a first illumination mode of Fig. 2E, aperture plate 13NW provides off-axis illumination from the directions designated 'north' and 'west' as previously described. In a second illumination mode, aperture plate 13SE is used to provide similar illumination, but from an opposite direction, labeled 'south' and 'east' as previously described. The use of these, and numerous other variations and applications of the apparatus are described in, for example, the prior published patent application publications mentioned above.

[0059] Fig. 2F depicts an example composite metrology target formed on a substrate. The composite target comprises four periodic structures (in this case, gratings) 32, 33, 34, 35 positioned closely together. In an embodiment, the periodic structures are positioned closely together enough so that they all are within a measurement spot 31 formed by the illumination beam of the metrology apparatus. In that case, the four periodic structures thus are all simultaneously illuminated and simultaneously imaged on sensors 19 and 23. In an example dedicated to overlay measurement, periodic structures 32, 33, 34, 35 are themselves composite periodic structures (e.g., composite gratings) formed by overlying periodic structures, i.e., periodic structures are patterned in different layers of the device formed on substrate W and such that at least one periodic structure in one layer overlays at least one periodic structure in a different layer. Such a target may have outer dimensions within 20 μm x 20 μm or within 16 μm x 16 μm. Further, all the periodic structures are used to measure overlay between a particular pair of layers. To facilitate a target being able to measure more than a single pair of layers, periodic structures 32, 33, 34, 35 may have differently biased overlay offsets in order to facilitate measurement of overlay between different layers in which the different parts of the composite periodic structures are formed. Thus, all the periodic structures for the target on the substrate would be used to measure one pair of layers and all the periodic structures for another same target on the substrate would be used to measure another pair of layers, wherein the different bias facilitates distinguishing between the layer pairs.

[0060] Fig. 2G shows an example of an image that may be formed on and detected by the sensor 23, using the target of Fig. 2F in the apparatus of Fig. 2B, using the aperture plates 13NW or 13SE from Fig. 2E. While the sensor 19 cannot resolve the different individual periodic structures 32 to 35, the sensor 23 can do so. The dark rectangle represents the field of the image on the sensor, within which the illuminated spot 31 on the substrate is imaged into a corresponding circular area 41. Within this, rectangular areas 42-45 represent the images of the periodic structures 32 to 35. If the periodic structures are located in product areas, product features may also be visible in the periphery of this image field. Image processor and controller PU processes these images using pattern recognition to identify the separate images 42 to 45 of periodic structures 32 to 35. In this way, the images do not have to be aligned very precisely at a specific location within the sensor frame, which greatly improves throughput of the measuring apparatus as a

whole.

[0061] Accuracy and precision are related but distinct concepts. The accuracy of a measurement of a quantity is the degree of closeness of the measured value of the quantity to the true value of the quantity. The precision of a measurement, related to reproducibility and repeatability, is the degree to which repeated measurements of a quantity under unchanged conditions show the same results. Although the two terms precision and accuracy can be synonymous in colloquial use, they are deliberately contrasted in the context of the scientific method and in this disclosure. A measurement can be accurate but not precise, precise but not accurate, neither, or both. For example, if a measurement contains a systematic error, then increasing the sample size (i.e., number of repetitions) generally increases precision but does not improve accuracy. Eliminating the systematic error improves accuracy but does not change precision.

[0062] Based on these definitions, to ascertain the precision of a measurement does not necessarily require knowledge of the true value of the quantity measured. The precision of a measurement on a quantity may be limited by the nature of the measurement, the apparatus used for the measurement, the environment, or even the physics involved in the measurement. However, to ascertain the accuracy of a measurement may be difficult without knowing the true value of the quantity measured.

[0063] In the context of a semiconductor device fabrication process, to determine whether a substrate measurement recipe is accurate and to obtain the true value from the measurement results may be challenging because the true value and the systematic errors both manifest in the results of the measurement. Namely, they both affect the results and thus the results can have contribution from the true value and contribution from the systematic errors. If the contribution of the systematic errors can be determined, the accuracy of the measurement and the true value may be determined from the results of the measurement. If the results of the measurement are linear combinations (e.g., the sum) of the contribution from the systematic errors and the contribution from the true value, the contribution from true value can be obtained by removing the systematic errors from the results of the measurement and the true value can be determined from the contribution from true value.

[0064] Fig. 4A and Fig. 4B demonstrate how the same target may introduce different systematic errors in different substrate measurement recipes. Fig. 4A schematically shows a cross-sectional view of a target 310 including an upper structure 311 over a trench 312, suitable for measuring overlay error between the upper structure 311 and the trench 312. The bottom 313 of the trench 312 is tilted (not parallel to the substrate) because of the process (e.g., etch, CMP, or other steps in the process). For example, two otherwise identical substrate measurement recipes use light beams 314 and 315 at the same incidence angle for substrate measurement, except that the light beams 314 and 315 are directed from different directions onto the substrate. Although the beams 314 and 315 have the same angle of incidence relative to the substrate, they do not have the same angle of incidence relative to the bottom 313 of the

trench 312 because the bottom 313 is tilted relative to the substrate. Therefore, characteristics of the scattering of the beams 314 and 315 by the target are different.

[0065] Fig. 4B schematically shows a cross-sectional view of another target 320 including an upper structure 321 over a trench 322, suitable for measuring overlay error between the upper structure 321 and the trench 322. The sidewall 323 of the trench 322 is tilted (not perpendicular to the substrate) because of the process (e.g., etch, CMP, or other steps in the process). For example, two otherwise identical substrate measurement recipes use light beams 324 and 325 at the same incidence angle for substrate measurement, except that the light beams 324 and 325 are directed from different directions onto the substrate. Although the beams 324 and 325 have the same angle of incidence relative to the substrate, the beam 324 glances off the sidewall 323 while the beam 325 is almost normal to the sidewall 323. The beam 324 thus is barely scattered by the sidewall 323 but the beam 325 is strongly scattered by the sidewall 323. Therefore, characteristics of the scattering of the beams 324 and 325 by the target are different.

[0066] One way to determine the contribution of the systematic errors is modeling. If the cause of the systematic errors can be measured and the relationship between the cause to the contribution of the systematic errors is known, the contribution of the systematic errors can be determined from the measured cause and the relationship. Unfortunately, the cause is not always measureable and the relationship is not always known. This disclosure will describe another approach that statistically determines the contribution from the systematic errors from results of the measurement.

[0067] Fig. 5 schematically shows the combination of contributions $(S_1,\ S_2, \cdots, S_m)$ from various sources (such as the systematic errors and the true value) in a set of measurement results $(M_1,\ M_1, \cdots, M_n)$. When the combination is linear, the combination may be expressed by a matrix A where $\begin{bmatrix} M_1 \\ M_2 \\ \vdots \\ M_n \end{bmatrix} = A \begin{bmatrix} S_1 \\ S_2 \\ \vdots \\ S_m \end{bmatrix}$. Often the measurement results $(M_1,\ M_1, \cdots, M_n)$ are known and the problem is to find the contributions $(S_1,\ S_2, \cdots, S_m)$ from the measurement results $(M_1,\ M_1, \cdots, M_n)$. The contributions $(S_1,\ S_2, \cdots, S_m)$ can be determined by determining the matrix A.

[0068] Fig. 6 schematically shows twelve overlay values measured at different locations i on a substrate, as examples of the results $(M_1,\ M_1, \cdots, M_n)$. Each of these twelve overlay values may be obtained by a metrology tool like that depicted in Fig. 2B from a target at one of locations i. Each of these twelve overlay values may have contributions S_1 and S_2 from two different sources, one of which can be the true value of the overlay and the other can be asymmetry (e.g., those depicted in Fig. 4A and Fig. 4B) in the target measured at that location. When the coefficients $a_{i,1}$ and $a_{i,2}$ are determined, each of the two contributions in each of the results is determined. Assuming that contribution S_1 is from the

true value, once $a_{i,1}$ is known, the true value of the overlay at each of the locations i is $a_{i,1}\overrightarrow{S_1}$, and the asymmetry may be determined from $a_{i,2}\overrightarrow{S_2}$ by, for example, using appropriate modeling. The nature of the contributions may be verified by other data, for example, correlation with SEM images, or consistency with a contribution determined in data from another metrology tool affected differently by the asymmetry of the target.

[0069] Fig. 7 schematically shows that the twelve overlay values, the true values of the overlay, and the contribution from the asymmetry may be plotted as maps (i.e., as a function of locations i).

[0070] Fig. 8 schematically shows a flow chart for a method of determining contributions from different sources in a set of results 810 measured from a lithography process or a substrate processed by the lithography process, according to an embodiment. The results 810 are measured using multiple different substrate measurement recipes. In 820, the number of dimensions in the results 810 is optionally reduced. For example, the results may be overlay values obtained from multiple different locations and at each location using multiple different substrate measurement recipes. The substrate measurement recipes may differ in some parameters $(r_1, r_2, r_3, \ldots r_n; t_1, t_2, t_3, \ldots t_n)$, such as polarization and wavelength of the light used in the substrate measurement recipes. Each of the parameters is a dimension of the results 810. Some of the parameters may not be independent. Reducing the number of dimensions can achieved using a suitable algorithm such as principal component analysis (PCA). PCA is a statistical procedure that uses an orthogonal transformation to convert a set of observations of possibly correlated variables into a set of values of linearly uncorrelated variables called principal components. In 830, contributions 850 from independent sources are determined from the results 810 with optionally reduced number of dimensions. One way to determine the contributions is by independent component analysis (ICA). ICA separates data into additive contributions from statistically mutually independent and non-Gaussian sources. The contributions 850 can be compiled as a matrix 840 that projects the independent sources to the results 810.

[0071] Fig. 9 schematically shows that the contribution 850T from the true value may be identified from the measurement among the contributions 850, according to an embodiment. The contribution 850T may be identified by verification with other data (SEM images). The contribution 850T may be identified by finding which of contributions 850 is consistent with a contribution determined in results of another measurement because the true values should affect different measurements on the same characteristic similarly and other sources may affect these measurements differently. For example, because the substrate measurement recipes used in Fig. 8 are all used to measure the same characteristic (e.g., overlay), the true value of the characteristic should have similar contribution in the results 810. If a contribution from a source among the contributions 850 is similar across the results 810, that contribution is likely the contribution from the true value.

[0072] Fig. 10 schematically shows that accuracy 860 of the substrate measurement recipes used to

obtain the results 810 may be determined from the contributions 850 (or the matrix 840). An accurate substrate measurement recipe, by definition, should lead to results having a large contribution from the true value and small contributions from other sources. Therefore, if the contributions 850 show that a particular substrate measurement recipe has a large contribution from the true value and small contributions from other sources, that particular substrate measurement recipe is accurate.

[0073] Fig. 11A, Fig. 11B and Fig. 11C each show normalized contributions (vertical axes) from three sources in results obtained using sixteen different substrate measurement recipes (horizontal axes). The substrate measurement recipe marked by the arrow is relative accurate because it leads to results having a large contribution from one of the three sources, which is likely the true value, and small contributions from the other two sources.

[0074] Fig. 12 is a block diagram that illustrates a computer system 100 which can assist in implementing the methods and flows disclosed herein. Computer system 100 includes a bus 102 or other communication mechanism to communicate information, and a processor 104 (or multiple processors 104 and 105) coupled with bus 102 to process information. Computer system 100 may also include a main memory 106, such as a random access memory (RAM) or other dynamic storage device, coupled to bus 102 to store and/or supply information and instructions to be executed by processor 104. Main memory 106 may be used to store and/or supply temporary variables or other intermediate information during execution of instructions to be executed by processor 104. Computer system 100 may further include a read only memory (ROM) 108 or other static storage device coupled to bus 102 to store and/or supply static information and instructions for processor 104. A storage device 110, such as a magnetic disk or optical disk, may be provided and coupled to bus 102 to store and/or supply information and instructions.

[0075] Computer system 100 may be coupled via bus 102 to a display 112, such as a cathode ray tube (CRT) or flat panel or touch panel display, to display information to a computer user. An input device 114, including alphanumeric and other keys, may be coupled to bus 102 to communicate information and command selections to processor 104. Another type of user input device may be cursor control 116, such as a mouse, a trackball, or cursor direction keys, to communicate direction information and command selections to processor 104 and to control cursor movement on display 112. This input device typically has two degrees of freedom in two axes, a first axis (e.g., x) and a second axis (e.g., y), that allows the device to specify positions in a plane. A touch panel (screen) display may also be used as an input device.

[0076] According to one embodiment, portions of the optimization process may be performed by computer system 100 in response to processor 104 executing one or more sequences of one or more instructions contained in main memory 106. Such instructions may be read into main memory 106 from another computer-readable medium, such as storage device 110. Execution of the sequences of instructions contained in main memory 106 causes processor 104 to perform the process steps described

herein. One or more processors in a multi-processing arrangement may be employed to execute the sequences of instructions contained in main memory 106. In an alternative embodiment, hard-wired circuitry may be used in place of or in combination with software instructions. Thus, the description herein is not limited to any specific combination of hardware circuitry and software.

[0077] The term "computer-readable medium" as used herein refers to any medium that participates in providing instructions to processor 104 for execution. Such a medium may take many forms, including but not limited to, non-volatile media, volatile media, and transmission media. Non-volatile media include, for example, optical or magnetic disks, such as storage device 110. Volatile media include dynamic memory, such as main memory 106. Transmission media include coaxial cables, copper wire and fiber optics, including the wires that comprise bus 102. Transmission media can also take the form of acoustic or light waves, such as those generated during radio frequency (RF) and infrared (IR) data communications. Common forms of computer-readable media include, for example, a floppy disk, a flexible disk, hard disk, magnetic tape, any other magnetic medium, a CD-ROM, DVD, any other optical medium, punch cards, paper tape, any other physical medium with patterns of holes, a RAM, a PROM, and EPROM, a FLASH-EPROM, any other memory chip or cartridge, a carrier wave as described hereinafter, or any other medium from which a computer can read.

[0078] Various forms of computer readable media may be involved in carrying one or more sequences of one or more instructions to processor 104 for execution. For example, the instructions may initially be borne on a disk or memory of a remote computer. The remote computer can load the instructions into its dynamic memory and send the instructions over a communications path. Computer system 100 can receive the data from the path and place the data on bus 102. Bus 102 carries the data to main memory 106, from which processor 104 retrieves and executes the instructions. The instructions received by main memory 106 may optionally be stored on storage device 110 either before or after execution by processor 104.

[0079] Computer system 100 may include a communication interface 118 coupled to bus 102. Communication interface 118 provides a two-way data communication coupling to a network link 120 that is connected to a network 122. For example, communication interface 118 may provide a wired or wireless data communication connection. In any such implementation, communication interface 118 sends and receives electrical, electromagnetic or optical signals that carry digital data streams representing various types of information.

[0080] Network link 120 typically provides data communication through one or more networks to other data devices. For example, network link 120 may provide a connection through network 122 to a host computer 124 or to data equipment operated by an Internet Service Provider (ISP) 126. ISP 126 in turn provides data communication services through the worldwide packet data communication network,

now commonly referred to as the "Internet" 128. Network 122 and Internet 128 both use electrical, electromagnetic or optical signals that carry digital data streams. The signals through the various networks and the signals on network link 120 and through communication interface 118, which carry the digital data to and from computer system 100, are exemplary forms of carrier waves transporting the information.

[0081] Computer system 100 can send messages and receive data, including program code, through the network(s), network link 120, and communication interface 118. In the Internet example, a server 130 might transmit a requested code for an application program through Internet 128, ISP 126, network 122 and communication interface 118. One such downloaded application may provide for the code to implement a method herein, for example. The received code may be executed by processor 104 as it is received, and/or stored in storage device 110, or other non-volatile storage for later execution. In this manner, computer system 100 may obtain application code in the form of a carrier wave.

[0082] Fig. 13 schematically depicts an exemplary lithographic apparatus. The apparatus comprises:

- an illumination system IL, to condition a beam B of radiation. In this particular case, the illumination system also comprises a radiation source SO;
- a first object table (e.g., mask table) MT provided with a patterning device holder to hold a patterning device MA (e.g., a reticle), and connected to a first positioner PM to accurately position the patterning device with respect to item PS;
- a second object table (substrate table) WT provided with a substrate holder to hold a substrate W (e.g., a resist-coated silicon wafer), and connected to a second positioner PW to accurately position the substrate with respect to item PS;
- a projection system PS (e.g., a refractive, catoptric or catadioptric optical system) to image an irradiated portion of the patterning device MA onto a target portion C (e.g., comprising one or more dies) of the substrate W.

[0083] As depicted herein, the apparatus is of a transmissive type (i.e., has a transmissive mask). However, in general, it may also be of a reflective type, for example (with a reflective mask). Alternatively, the apparatus may employ another kind of patterning device as an alternative to the use of a classic mask; examples include a programmable mirror array or LCD matrix.

[0084] The source SO (e.g., a mercury lamp or excimer laser) produces a beam of radiation. This beam is fed into an illumination system (illuminator) IL, either directly or after having traversed a conditioner, such as a beam expander. The illuminator IL may comprise an adjuster AD configured to set the outer and/or inner radial extent (commonly referred to as σ-outer and σ-inner, respectively) of the intensity distribution in the beam. In addition, it will generally comprise various other components, such as an integrator IN and a condenser CO. In this way, the beam B impinging on the patterning device MA has a

desired uniformity and intensity distribution in its cross-section.

[0085] It should be noted with regard to Fig. 13 that the source SO may be within the housing of the lithographic apparatus (as is often the case when the source SO is a mercury lamp, for example), but that it may also be remote from the lithographic apparatus, the radiation beam that it produces being led into the apparatus (e.g., with the aid of suitable directing mirrors BD); this latter scenario is often the case when the source SO is an excimer laser (e.g., based on KrF, ArF or F_2 lasing).

[0086] The beam B subsequently intercepts the patterning device MA, which is held on a patterning device table MT. Having traversed the patterning device MA, the beam B passes through the projection system PS, which focuses the beam B onto a target portion C of the substrate W. With the aid of the second positioner PW (and interferometer IF), the substrate table WT can be moved accurately, e.g. so as to position different target portions C in the path of the beam B. Similarly, the first positioner PM can be used to accurately position the patterning device MA with respect to the path of the beam B, e.g., after mechanical retrieval of the patterning device MA from a patterning device library, or during a scan. In general, movement of the object tables MT, WT will be realized with the aid of a long-stroke module (coarse positioning) and a short-stroke module (fine positioning), which are not explicitly depicted in Fig. 13.

[0087] Patterning device (e.g., mask) MA and substrate W may be aligned using mask alignment marks M1, M2 and substrate alignment marks P1, P2. Although the substrate alignment marks as illustrated occupy dedicated target portions, they may be located in spaces between target portions (these are known as scribe-lane alignment marks). Similarly, in situations in which more than one die is provided on the patterning device (e.g., mask) MA, the patterning device alignment marks may be located between the dies. Small alignment markers may also be included within dies, in amongst the device features, in which case it is desirable that the markers be as small as possible and not require any different imaging or process conditions than adjacent features.

[0088] Fig. 14 schematically depicts another exemplary lithographic apparatus 1000. The lithographic apparatus 1000 includes:

[0089] - a source collector module SO

[0090] - an illumination system (illuminator) IL configured to condition a radiation beam B (e.g. EUV radiation).

[0091] - a support structure (e.g. a mask table) MT constructed to support a patterning device (e.g. a mask or a reticle) MA and connected to a first positioner PM configured to accurately position the patterning device;

[0092] - a substrate table (e.g. a wafer table) WT constructed to hold a substrate (e.g. a resist coated wafer) W and connected to a second positioner PW configured to accurately position the substrate; and

[0093] - a projection system (e.g. a reflective projection system) PS configured to project a pattern imparted to the radiation beam B by patterning device MA onto a target portion C (e.g. comprising one or more dies) of the substrate W.

[0094] As here depicted, the apparatus 1000 is of a reflective type (e.g. employing a reflective mask). It is to be noted that because most materials are absorptive within the EUV wavelength range, the patterning device may have a multilayer reflector comprising, for example, a multi-stack of molybdenum and silicon. In one example, the multi-stack reflector has a 40 layer pairs of molybdenum and silicon. Even smaller wavelengths may be produced with X-ray lithography. Since most material is absorptive at EUV and x-ray wavelengths, a thin piece of patterned absorbing material on the patterning device topography (e.g., a TaN absorber on top of the multi-layer reflector) defines where features would print (positive resist) or not print (negative resist).

[0095] Referring to Fig. 14, the illuminator IL receives an extreme ultra violet (EUV) radiation beam from the source collector module SO. Methods to produce EUV radiation include, but are not necessarily limited to, converting a material into a plasma state that has at least one element, e.g., xenon, lithium or tin, with one or more emission lines in the EUV range. In one such method, often termed laser produced plasma ("LPP") the plasma can be produced by irradiating a fuel, such as a droplet, stream or cluster of material having the line-emitting element, with a laser beam. The source collector module SO may be part of an EUV radiation system including a laser, not shown in Fig. 14, to provide the laser beam to excite the fuel. The resulting plasma emits output radiation, e.g., EUV radiation, which is collected using a radiation collector, disposed in the source collector module. The laser and the source collector module may be separate entities, for example when a CO_2 laser is used to provide the laser beam for fuel excitation.

[0096] In such cases, the laser is not considered to form part of the lithographic apparatus and the radiation beam is passed from the laser to the source collector module with the aid of a beam delivery system comprising, for example, suitable directing mirrors and/or a beam expander. In other cases the source may be an integral part of the source collector module, for example when the source is a discharge produced plasma EUV generator, often termed as a DPP source.

[0097] The illuminator IL may comprise an adjuster configured to adjust the angular intensity distribution of the radiation beam. Generally, at least the outer and/or inner radial extent (commonly referred to as σ-outer and σ-inner, respectively) of the intensity distribution in a pupil plane of the illuminator can be adjusted. In addition, the illuminator IL may comprise various other components, such as facetted field and pupil mirror devices. The illuminator may be used to condition the radiation beam, to have a desired uniformity and intensity distribution in its cross section.

[0098] The radiation beam B is incident on the patterning device (e.g., mask) MA, which is held on the support structure (e.g., mask table) MT, and is patterned by the patterning device. After being reflected

from the patterning device (e.g. mask) MA, the radiation beam B passes through the projection system PS, which focuses the beam onto a target portion C of the substrate W. With the aid of the second positioner PW and position sensor PS2 (e.g. an interferometric device, linear encoder or capacitive sensor), the substrate table WT can be moved accurately, e.g. so as to position different target portions C in the path of the radiation beam B. Similarly, the first positioner PM and another position sensor PS1 can be used to accurately position the patterning device (e.g. mask) MA with respect to the path of the radiation beam B. Patterning device (e.g. mask) MA and substrate W may be aligned using patterning device alignment marks M1, M2 and substrate alignment marks P1, P2.

[0099] The depicted apparatus could be used in at least one of the following modes:

[00100] 1. In step mode, the support structure (e.g. mask table) MT and the substrate table WT are kept essentially stationary, while an entire pattern imparted to the radiation beam is projected onto a target portion C at one time (i.e. a single static exposure). The substrate table WT is then shifted in the X and/or Y direction so that a different target portion C can be exposed.

[00101] 2. In scan mode, the support structure (e.g. mask table) MT and the substrate table WT are scanned synchronously in a given direction (the so-called "scan direction") while a pattern imparted to the radiation beam is projected onto a target portion C (i.e. a single dynamic exposure). The velocity and direction of the substrate table WT relative to the support structure (e.g. mask table) MT may be determined by the (de-)magnification and image reversal characteristics of the projection system PS.

[00102] 3. In another mode, the support structure (e.g. mask table) MT is kept essentially stationary holding a programmable patterning device, and the substrate table WT is moved or scanned while a pattern imparted to the radiation beam is projected onto a target portion C. In this mode, generally a pulsed radiation source is employed and the programmable patterning device is updated as required after each movement of the substrate table WT or in between successive radiation pulses during a scan. This mode of operation can be readily applied to maskless lithography that utilizes programmable patterning device, such as a programmable mirror array of a type as referred to above.

[00103] Further, the lithographic apparatus may be of a type having two or more tables (e.g., two or more substrate table, two or more patterning device tables, and/or a substrate table and a table without a substrate). In such "multiple stage" devices the additional tables may be used in parallel, or preparatory steps may be carried out on one or more tables while one or more other tables are being used for exposures. Twin stage lithographic apparatuses are described, for example, in U.S. Patent No. 5,969,441, incorporated herein by reference in its entirety.

[00104] Fig. 15 shows the apparatus 1000 in more detail, including the source collector module SO, the illumination system IL, and the projection system PS. The source collector module SO is constructed and arranged such that a vacuum environment can be maintained in an enclosing structure 220 of the source

collector module SO. An EUV radiation emitting plasma 210 may be formed by a discharge produced plasma source. EUV radiation may be produced by a gas or vapor, for example Xe gas, Li vapor or Sn vapor in which the very hot plasma 210 is created to emit radiation in the EUV range of the electromagnetic spectrum. The very hot plasma 210 is created by, for example, an electrical discharge causing an at least partially ionized plasma. Partial pressures of, for example, 10 Pa of Xe, Li, Sn vapor or any other suitable gas or vapor may be required for efficient generation of the radiation. In an embodiment, a plasma of excited tin (Sn) is provided to produce EUV radiation.

[00105] The radiation emitted by the hot plasma 210 is passed from a source chamber 211 into a collector chamber 212 via an optional gas barrier or contaminant trap 230 (in some cases also referred to as contaminant barrier or foil trap) which is positioned in or behind an opening in source chamber 211. The contaminant trap 230 may include a channel structure. Contamination trap 230 may also include a gas barrier or a combination of a gas barrier and a channel structure. The contaminant trap or contaminant barrier 230 further indicated herein at least includes a channel structure, as known in the art.

[00106] The collector chamber 211 may include a radiation collector CO which may be a so-called grazing incidence collector. Radiation collector CO has an upstream radiation collector side 251 and a downstream radiation collector side 252. Radiation that traverses collector CO can be reflected off a grating spectral filter 240 to be focused in a virtual source point IF along the optical axis indicated by the dot-dashed line 'O'. The virtual source point IF is commonly referred to as the intermediate focus, and the source collector module is arranged such that the intermediate focus IF is located at or near an opening 221 in the enclosing structure 220. The virtual source point IF is an image of the radiation emitting plasma 210.

[00107] Subsequently the radiation traverses the illumination system IL, which may include a facetted field mirror device 22 and a facetted pupil mirror device 24 arranged to provide a desired angular distribution of the radiation beam 21, at the patterning device MA, as well as a desired uniformity of radiation intensity at the patterning device MA. Upon reflection of the beam of radiation 21 at the patterning device MA, held by the support structure MT, a patterned beam 26 is formed and the patterned beam 26 is imaged by the projection system PS via reflective elements 28, 30 onto a substrate W held by the substrate table WT.

[00108] More elements than shown may generally be present in illumination optics unit IL and projection system PS. The grating spectral filter 240 may optionally be present, depending upon the type of lithographic apparatus. Further, there may be more mirrors present than those shown in the figures, for example there may be 1- 6 additional reflective elements present in the projection system PS than shown in Fig. 15.

[00109] Collector optic CO, as illustrated in Fig. 15, is depicted as a nested collector with grazing

incidence reflectors 253, 254 and 255, just as an example of a collector (or collector mirror). The grazing incidence reflectors 253, 254 and 255 are disposed axially symmetric around the optical axis O and a collector optic CO of this type is desirably used in combination with a discharge produced plasma source, often called a DPP source. Alternatively, the source collector module SO may be part of an LPP radiation system.

[00110] The term "projection system" used herein should be broadly interpreted as encompassing any type of projection system, including refractive, reflective, catadioptric, magnetic, electromagnetic and electrostatic optical systems, or any combination thereof, as appropriate for the exposure radiation being used, or for other factors such as the use of an immersion liquid or the use of a vacuum.

[00111] The lithographic apparatus may also be of a type wherein at least a portion of the substrate may be covered by a liquid having a relatively high refractive index, e.g., water, so as to fill a space between the projection system and the substrate. An immersion liquid may also be applied to other spaces in the lithographic apparatus, for example, between the mask and the projection system. Immersion techniques are well known in the art for increasing the numerical aperture of projection systems. The term "immersion" as used herein does not mean that a structure, such as a substrate, must be submerged in liquid, but rather only means that liquid is located between the projection system and the substrate during exposure.

[00112] The concepts disclosed herein may be used to simulate or mathematically model any device manufacturing process involving a lithographic apparatus, and may be especially useful with emerging imaging technologies capable of producing wavelengths of an increasingly smaller size. Emerging technologies already in use include deep ultraviolet (DUV) lithography that is capable of producing a 193 nm wavelength with the use of an ArF laser, and even a 157 nm wavelength with the use of a fluorine laser. Moreover, EUV lithography is capable of producing wavelengths within a range of 5-20 nm.

[00113] While the concepts disclosed herein may be used for device manufacturing on a substrate such as a silicon wafer, it shall be understood that the disclosed concepts may be used with any type of lithographic imaging systems, e.g., those used for imaging on substrates other than silicon wafers.

[00114] The patterning device referred to above comprises or can form a design layout. The design layout can be generated utilizing a CAD (computer-aided design) program. This process is often referred to as EDA (electronic design automation). Most CAD programs follow a set of predetermined design rules in order to create functional design layouts/patterning devices. These rules are set by processing and design limitations. For example, design rules define the space tolerance between circuit devices (such as gates, capacitors, etc.) or interconnect lines, so as to ensure that the circuit devices or lines do not interact with one another in an undesirable way. The design rule limitations are typically referred to as "critical dimensions" (CD). A critical dimension of a circuit can be defined as the smallest width of a line or hole

or the smallest space between two lines or two holes. Thus, the CD determines the overall size and density of the designed circuit. Of course, one of the goals in integrated circuit fabrication is to faithfully reproduce the original circuit design on the substrate (via the patterning device).

[00115] The term "mask" or "patterning device" as employed in this text may be broadly interpreted as referring to a generic patterning device that can be used to endow an incoming radiation beam with a patterned cross-section, corresponding to a pattern that is to be created in a target portion of the substrate; the term "light valve" can also be used in this context. Besides the classic mask (transmissive or reflective; binary, phase-shifting, hybrid, etc.), examples of other such patterning devices include:

-a programmable mirror array. An example of such a device is a matrix-addressable surface having a viscoelastic control layer and a reflective surface. The basic principle behind such an apparatus is that (for example) addressed areas of the reflective surface reflect incident radiation as diffracted radiation, whereas unaddressed areas reflect incident radiation as undiffracted radiation. Using an appropriate filter, the said undiffracted radiation can be filtered out of the reflected beam, leaving only the diffracted radiation behind; in this manner, the beam becomes patterned according to the addressing pattern of the matrix-addressable surface. The required matrix addressing can be performed using suitable electronic means. More information on such mirror arrays can be gleaned, for example, from U. S. Patent Nos. 5,296,891 and 5,523,193, which are incorporated herein by reference.

-a programmable LCD array. An example of such a construction is given in U. S. Patent No. 5,229,872, which is incorporated herein by reference.

[00116] As noted, microlithography is a significant step in the manufacturing of devices such as ICs, where patterns formed on substrates define functional elements of the ICs, such as microprocessors, memory chips etc. Similar lithographic techniques are also used in the formation of flat panel displays, micro-electro mechanical systems (MEMS) and other devices.

[00117] The process in which features with dimensions smaller than the classical resolution limit of a lithographic apparatus are printed, is commonly known as low-k_1 lithography, according to the resolution formula $CD = k_1 \times \lambda / NA$, where λ is the wavelength of radiation employed (currently in most cases 248 nm or 193 nm), NA is the numerical aperture of projection optics in the lithographic apparatus, CD is the "critical dimension"–generally the smallest feature size printed–and k_1 is an empirical resolution factor. In general, the smaller k_1 the more difficult it becomes to reproduce a pattern on the substrate that resembles the shape and dimensions planned by a circuit designer in order to achieve particular electrical functionality and performance. To overcome these difficulties, sophisticated fine-tuning steps are applied to the lithographic apparatus and/or design layout. These include, for example, but not limited to, optimization of NA and optical coherence settings, customized illumination schemes, use of phase shifting patterning devices, optical proximity correction (OPC, sometimes also referred to as "optical and

process correction") in the design layout, or other methods generally defined as "resolution enhancement techniques" (RET).

[00118] As an example, OPC addresses the fact that the final size and placement of an image of the design layout projected on the substrate will not be identical to, or simply depend only on the size and placement of the design layout on the patterning device. A person skilled in the art will recognize that, especially in the context of lithography simulation/optimization, the term "mask"/"patterning device" and "design layout" can be used interchangeably, as in lithography simulation/optimization, a physical patterning device is not necessarily used but a design layout can be used to represent a physical patterning device. For the small feature sizes and high feature densities present on some design layout, the position of a particular edge of a given feature will be influenced to a certain extent by the presence or absence of other adjacent features. These proximity effects arise from minute amounts of radiation coupled from one feature to another and/or non-geometrical optical effects such as diffraction and interference. Similarly, proximity effects may arise from diffusion and other chemical effects during post-exposure bake (PEB), resist development, and etching that generally follow lithography.

[00119] To help ensure that the projected image of the design layout is in accordance with requirements of a given target circuit design, proximity effects may be predicted and compensated for, using sophisticated numerical models, corrections or pre-distortions of the design layout. The article "Full-Chip Lithography Simulation and Design Analysis - How OPC Is Changing IC Design", C. Spence, Proc. SPIE, Vol. 5751, pp 1-14 (2005) provides an overview of current "model-based" optical proximity correction processes. In a typical high-end design almost every feature of the design layout has some modification in order to achieve high fidelity of the projected image to the target design. These modifications may include shifting or biasing of edge positions or line widths as well as application of "assist" features that are intended to assist projection of other features.

[00120] Applying OPC is generally not an "exact science", but an empirical, iterative process that does not always compensate for all possible proximity effect. Therefore, the effect of OPC, e.g., design layouts after application of OPC and any other RET, should be verified by design inspection, i.e. intensive full-chip simulation using calibrated numerical process models, in order to minimize the possibility of design flaws being built into the patterning device pattern.

[00121] Both OPC and full-chip RET verification may be based on numerical modeling systems and methods as described, for example in, U.S. Patent Application Publication No. US 2005-0076322 and an article titled "Optimized Hardware and Software For Fast, Full Chip Simulation", by Y. Cao et al., Proc. SPIE, Vol. 5754, 405 (2005).

[00122] One RET is related to adjustment of the global bias of the design layout. The global bias is the difference between the patterns in the design layout and the patterns intended to print on the substrate. For

example, a circular pattern of 25 nm diameter may be printed on the substrate by a 50 nm diameter pattern in the design layout or by a 20 nm diameter pattern in the design layout but with high dose.

[00123] In addition to optimization to design layouts or patterning devices (e.g., OPC), the illumination source can also be optimized, either jointly with patterning device optimization or separately, in an effort to improve the overall lithography fidelity. The terms "illumination source" and "source" are used interchangeably in this document. As is known, off-axis illumination, such as annular, quadrupole, and dipole, is a proven way to resolve fine structures (i.e., target features) contained in the patterning device. However, when compared to a traditional illumination source, an off-axis illumination source usually provides less radiation intensity for the aerial image (AI). Thus, it becomes desirable to attempt to optimize the illumination source to achieve the optimal balance between finer resolution and reduced radiation intensity.

[00124] Numerous illumination source optimization approaches can be found, for example, in an article by Rosenbluth et al., titled "Optimum Mask and Source Patterns to Print A Given Shape", Journal of Microlithography, Microfabrication, Microsystems 1(1), pp.13-20, (2002). The source is partitioned into several regions, each of which corresponds to a certain region of the pupil spectrum. Then, the source distribution is assumed to be uniform in each source region and the brightness of each region is optimized for the process window. In another example set forth in an article by Granik, titled "Source Optimization for Image Fidelity and Throughput", Journal of Microlithography, Microfabrication, Microsystems 3(4), pp.509-522, (2004), several existing source optimization approaches are overviewed and a method based on illuminator pixels is proposed that converts the source optimization problem into a series of non-negative least square optimizations.

[00125] For low k_1 photolithography, optimization of both the source and patterning device is useful to ensure a viable process window for projection of critical circuit patterns. Some algorithms discretize illumination into independent source points and the patterning device pattern into diffraction orders in the spatial frequency domain, and separately formulate a cost function (which is defined as a function of selected design variables) based on process window metrics such as exposure latitude which could be predicted by optical imaging models from source point intensities and patterning device diffraction orders. The term "design variables" as used herein comprises a set of parameters of an apparatus or a device manufacturing process, for example, parameters a user of the lithographic apparatus can adjust, or image characteristics a user can adjust by adjusting those parameters. It should be appreciated that any characteristics of a device manufacturing process, including those of the source, the patterning device, the projection optics, and/or resist characteristics can be among the design variables in the optimization. The cost function is often a non-linear function of the design variables. Then standard optimization techniques are used to minimize the cost function.

[00126] A source and patterning device (design layout) optimization method and system that allows for simultaneous optimization of the source and patterning device using a cost function without constraints and within a practicable amount of time is described in a commonly assigned PCT Patent Application Publication No. WO2010/059954, which is hereby incorporated by reference in its entirety.

[00127] Another source and mask optimization method and system that involves optimizing the source by adjusting pixels of the source is described in U.S. Patent Application Publication No. 2010/0315614, which is hereby incorporated by reference in its entirety.

[00128] The term "projection optics" as used herein should be broadly interpreted as encompassing various types of optical systems, including refractive optics, reflective optics, apertures and catadioptric optics, for example. The term “projection optics” may also include components operating according to any of these design types for directing, shaping or controlling the projection beam of radiation, collectively or singularly. The term “projection optics” may include any optical component in the lithographic apparatus, no matter where the optical component is located on an optical path of the lithographic apparatus. Projection optics may include optical components for shaping, adjusting and/or projecting radiation from the source before the radiation passes the patterning device, and/or optical components for shaping, adjusting and/or projecting the radiation after the radiation passes the patterning device. The projection optics generally exclude the source and the patterning device.

[00129] Although specific reference may have been made above to the use of embodiments in the context of optical lithography, it will be appreciated that an embodiment of the invention may be used in other applications, for example imprint lithography, and where the context allows, is not limited to optical lithography. In imprint lithography, a topography in a patterning device defines the pattern created on a substrate. The topography of the patterning device may be pressed into a layer of resist supplied to the substrate whereupon the resist is cured by applying electromagnetic radiation, heat, pressure or a combination thereof. The patterning device is moved out of the resist leaving a pattern in it after the resist is cured. Thus, a lithographic apparatus using the imprint technology typically include a template holder to hold an imprint template, a substrate table to hold a substrate and one or more actuators to cause relative movement between the substrate and the imprint template so that the pattern of the imprint template can be imprinted onto a layer of the substrate.

[00130] The descriptions above are intended to be illustrative, not limiting. Thus, it will be apparent to one skilled in the art that modifications may be made as described without departing from the scope of the claims set out below.

WHAT IS CLAIMED IS:

1. A method comprising:

determining, using a computer, contributions from independent sources from results measured from a lithography process or a substrate processed by the lithography process;

wherein the results are measured using a plurality of different substrate measurement recipes.

2. The method of claim 1, further comprising reducing a number of dimensions of the results.

3. The method of claim 2, wherein reducing the number of dimensions comprises using principal component analysis (PCA).

4. The method of any one of claims 1-3, wherein the results are linear combinations of the contributions.

5. The method of any one of claims 1-4, further comprising compiling the contributions into a matrix.

6. The method of any one of claims 1-5, wherein the results comprise overlay values obtained from a plurality of different locations.

7. The method of any one of claims 1-6, wherein the substrate measurement recipes differ in a parameter of a measurement the substrate measurement recipes conduct, or a parameter of a pattern measured by the substrate measurement recipes.

8. The method of any one of claims 1-7, wherein the contributions comprise a contribution from a true value of a characteristic measured by the substrate measurement recipes.

9. The method of claim 8, further comprising identifying the contribution from the true value.

10. The method of claim 9, further comprising determining the true value from the contribution from the true value.

11. The method of any one of claims 9-10, wherein identifying the contribution from the true value comprises verification with other data.

12. The method of any one of claims 9-10, wherein identifying the contribution from the true value comprises finding which of the contributions is consistent across the plurality of substrate measurement recipes.

13. The method of any one of claims 1-7, further comprising determining accuracy of the substrate measurement recipes from the contributions.

14. A computer program product comprising a computer readable medium having instructions recorded thereon, the instructions when executed by a computer implementing the method of any of claims 1-13.

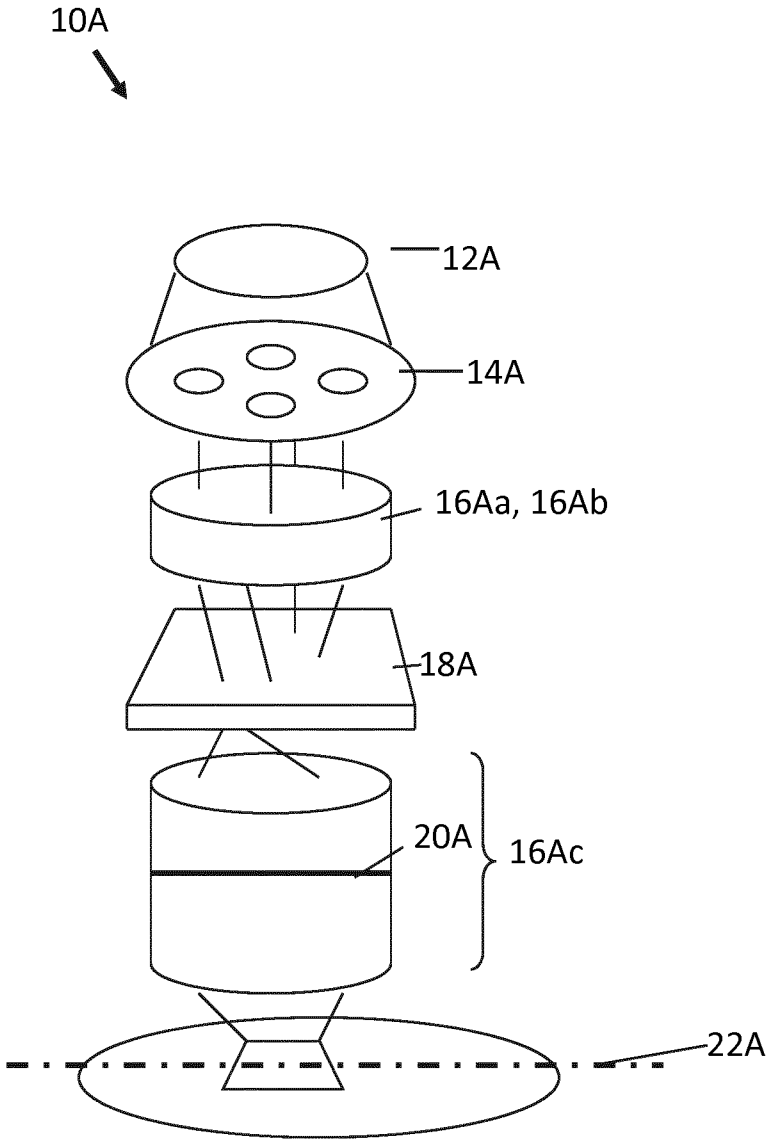

Fig. 1

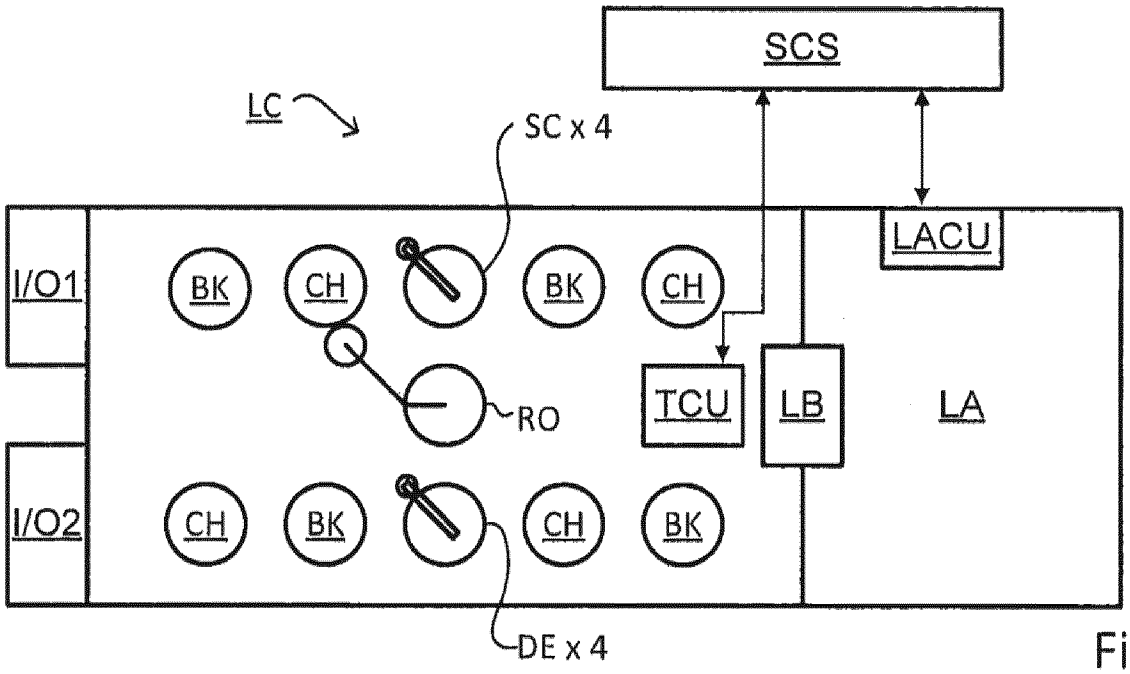

Fig. 2A

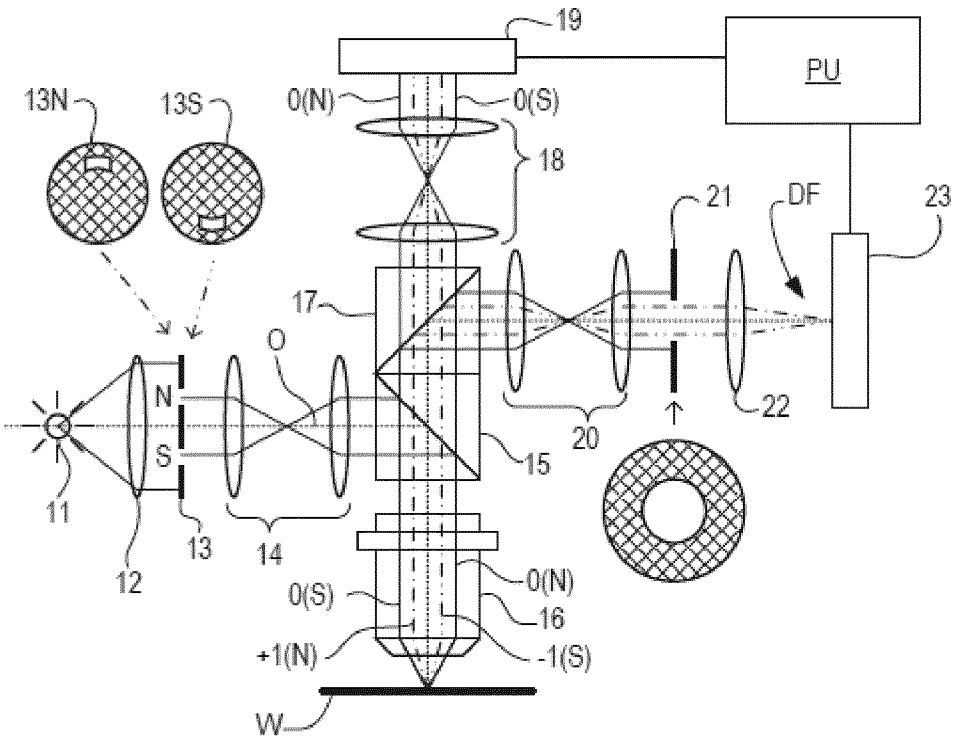
19
PU
13N
13S
0(N)
0(S)
18
21
DF
23
17
O
N
S
22
20
15
11
13
14
12
0(S)
0(N)
16
+1(N)
-1(S)
W

Fig. 2B

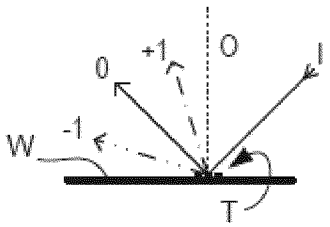

Fig. 2C

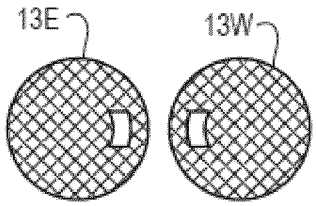

Fig. 2D

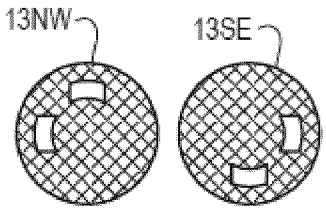

Fig. 2E

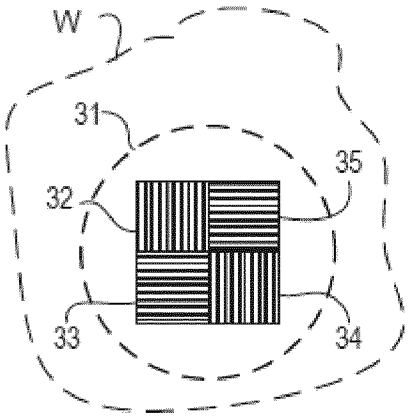

Fig. 2F

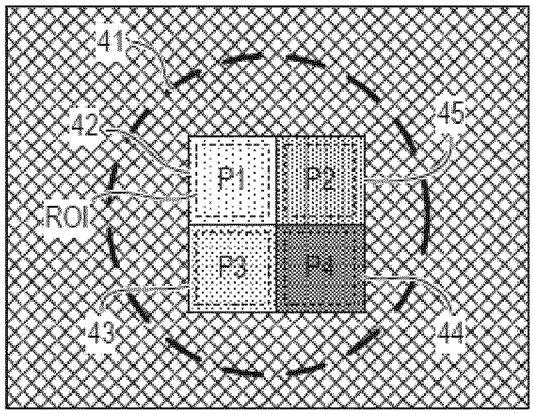

Fig. 2G

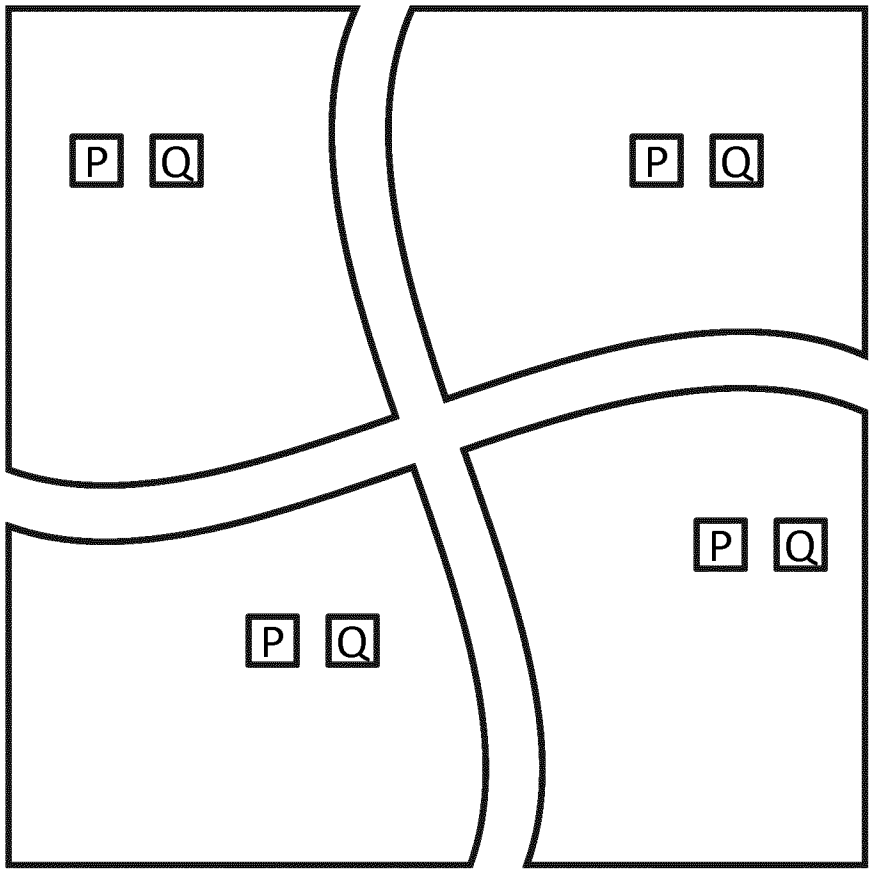

Fig. 3

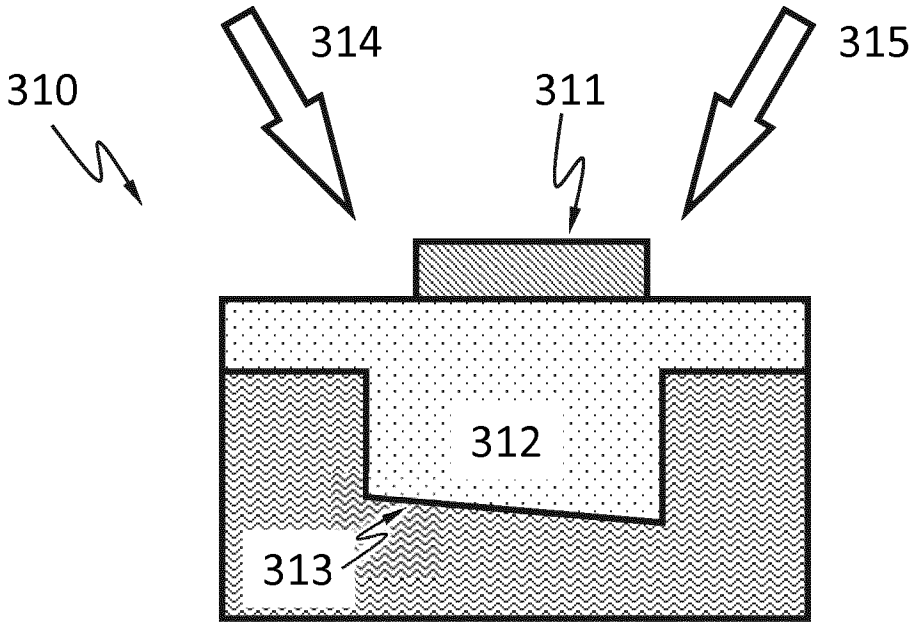

Fig. 4A

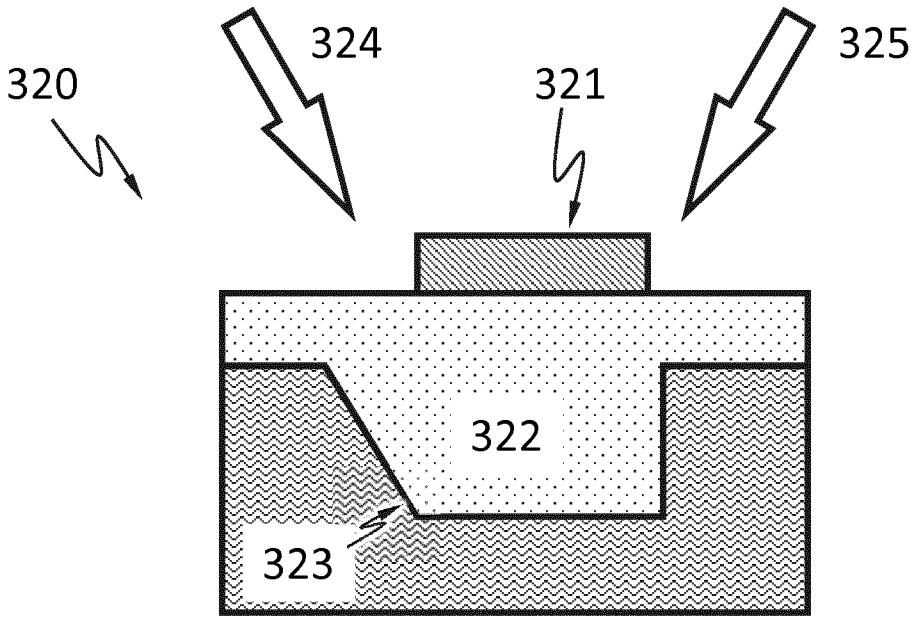

Fig. 4B

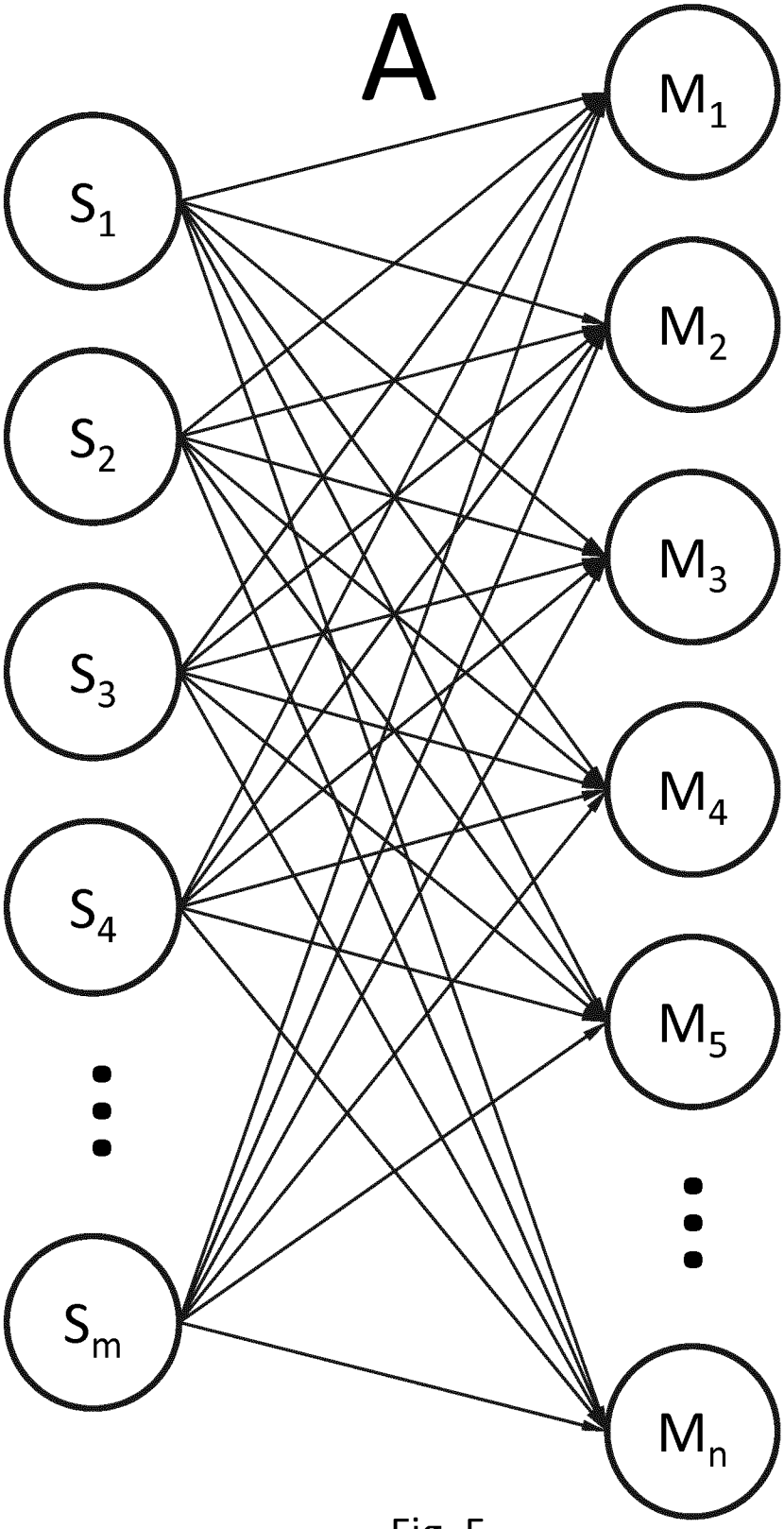

Fig. 5

$\dashrightarrow a_{i,1}\overrightarrow{S_1}$

$\dashrightarrow a_{i,2}\overrightarrow{S_2}$

$\rightarrow \overrightarrow{M_i} = a_{i,1}\overrightarrow{S_1} + a_{i,2}\overrightarrow{S_2}$

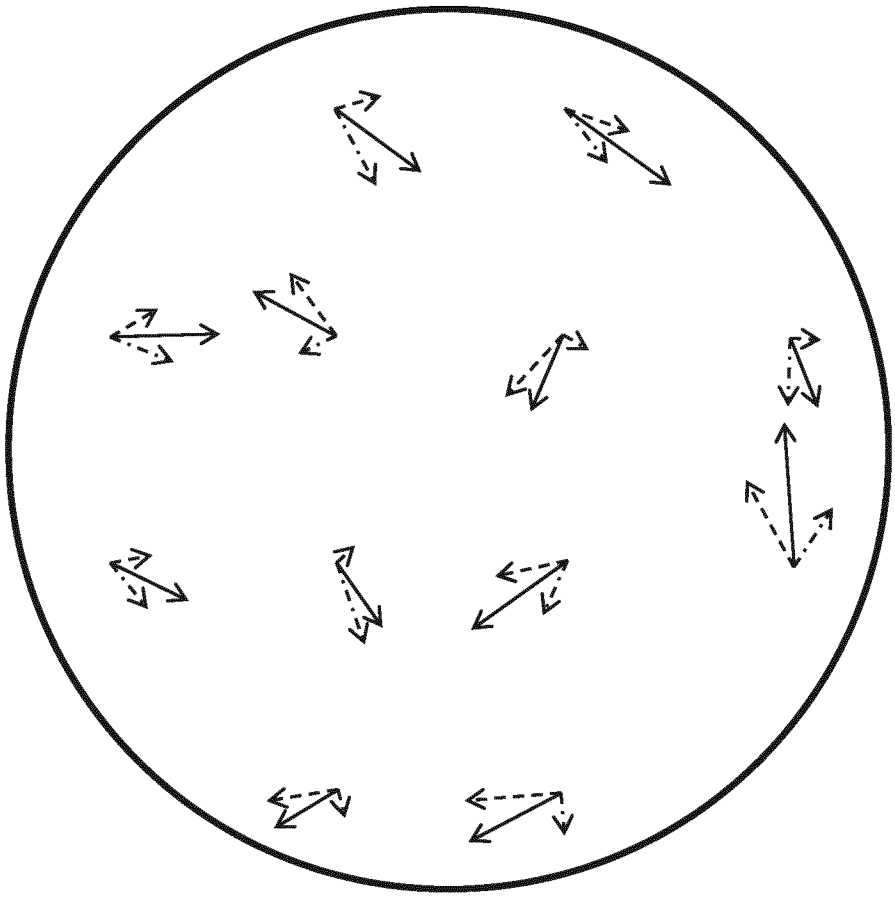

Fig. 6

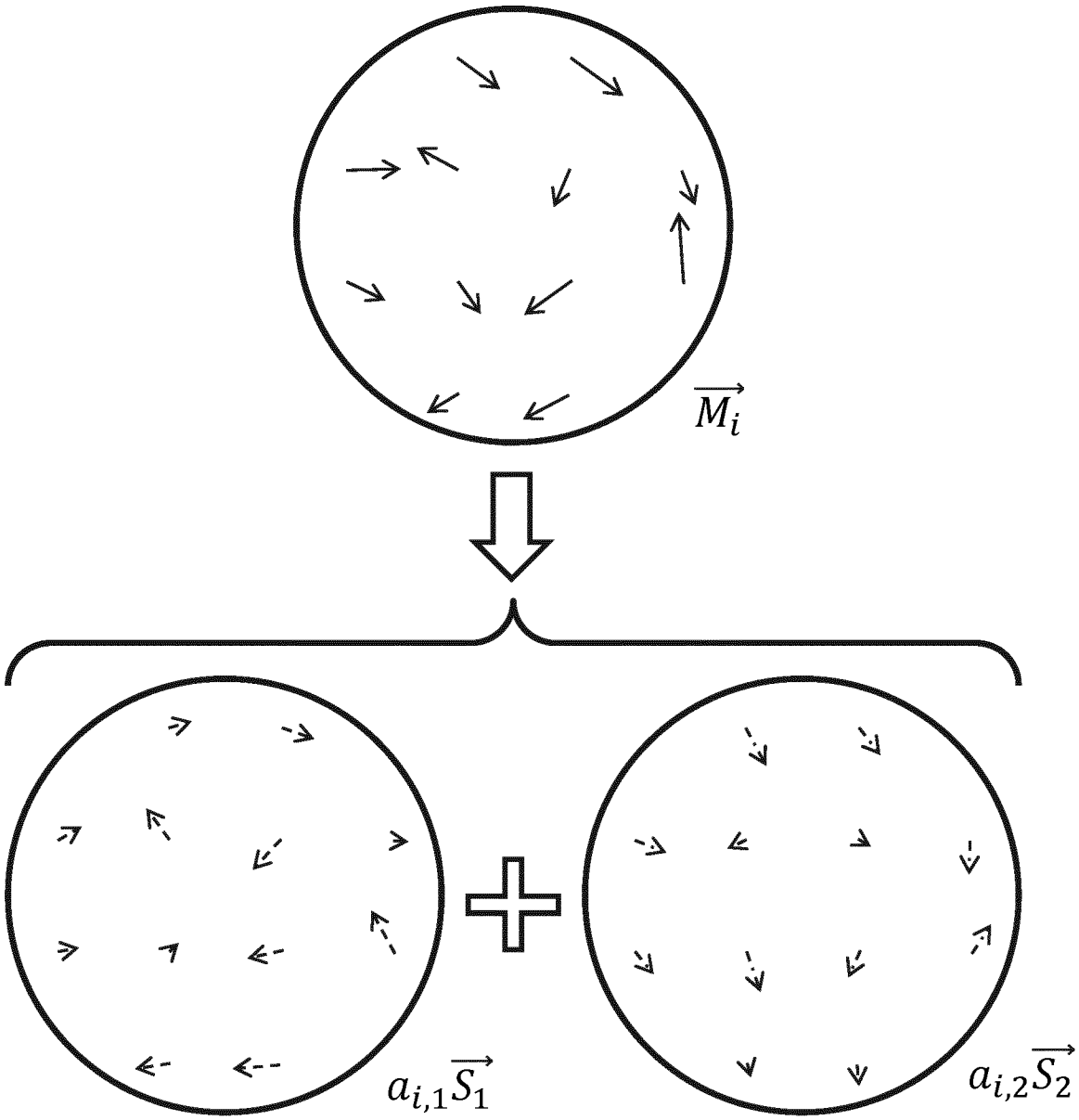
$\overrightarrow{M_i}$
$a_{i,1}\overrightarrow{S_1}$
$a_{i,2}\overrightarrow{S_2}$

Fig. 7

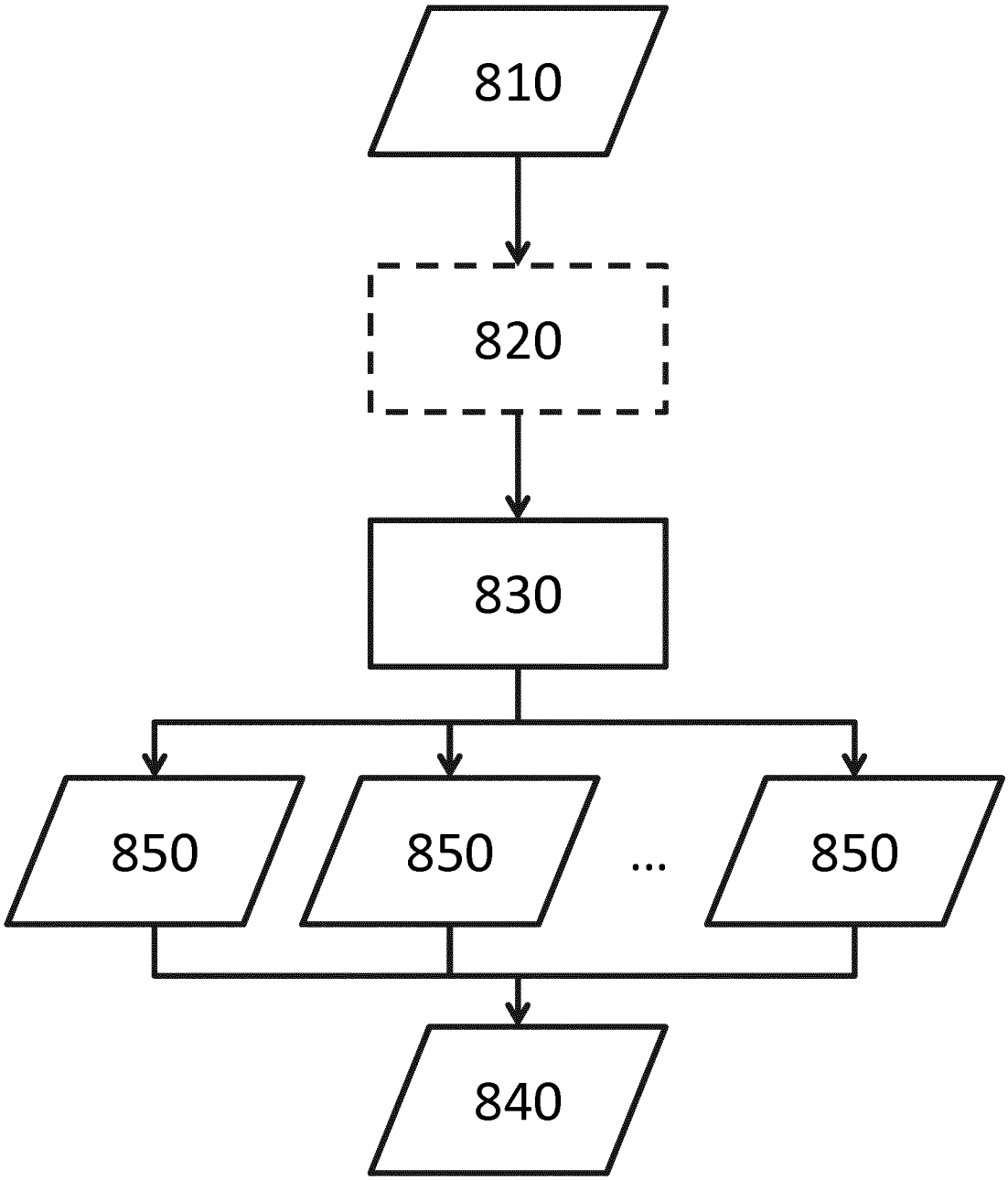

Fig. 8

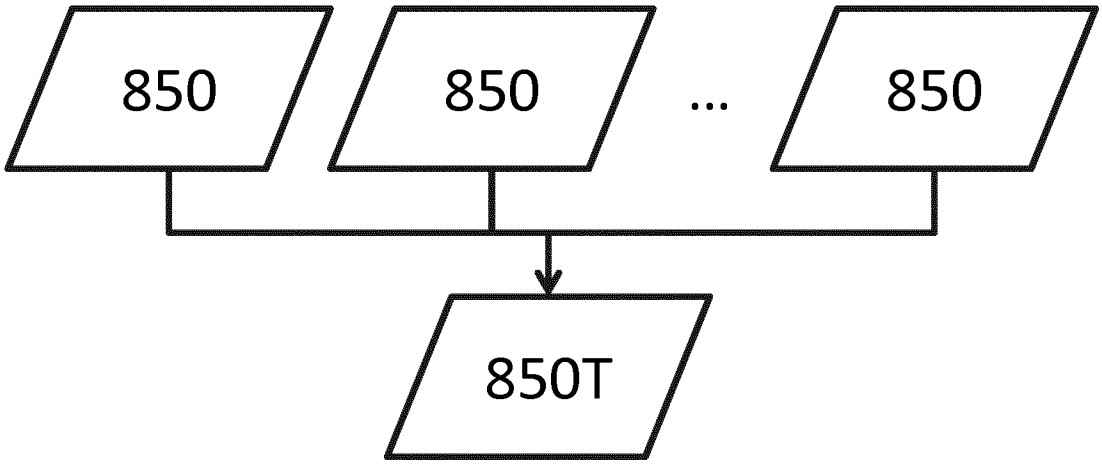

Fig. 9

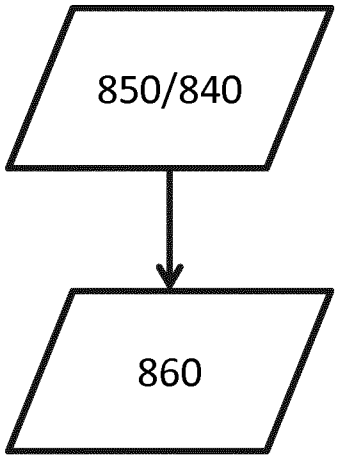

Fig. 10

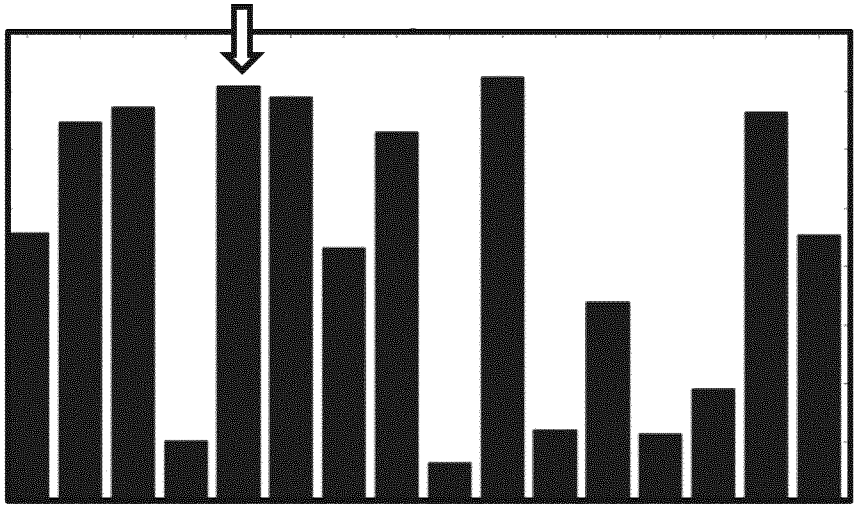

Fig. 11A

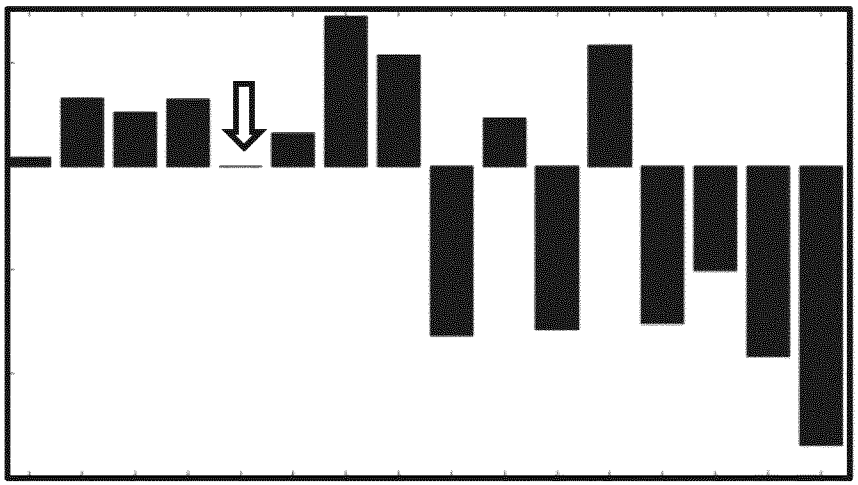

Fig. 11B

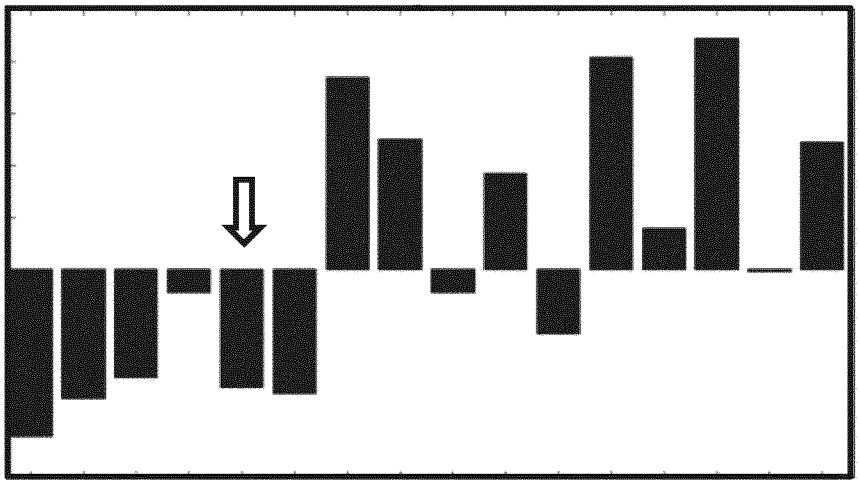

Fig. 11C

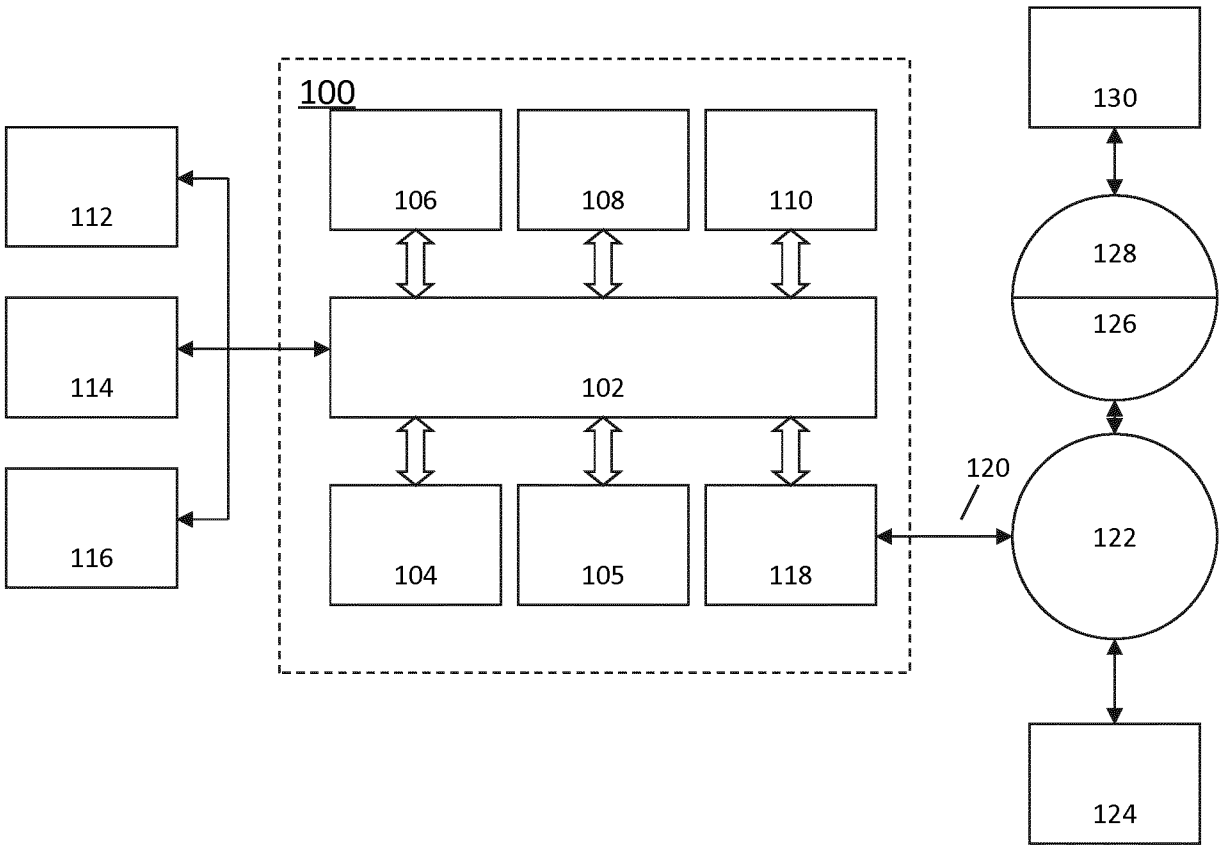
100
112
114
116
106
108
110
102
104
105
118
120
130
128
126
122
124

Fig. 12

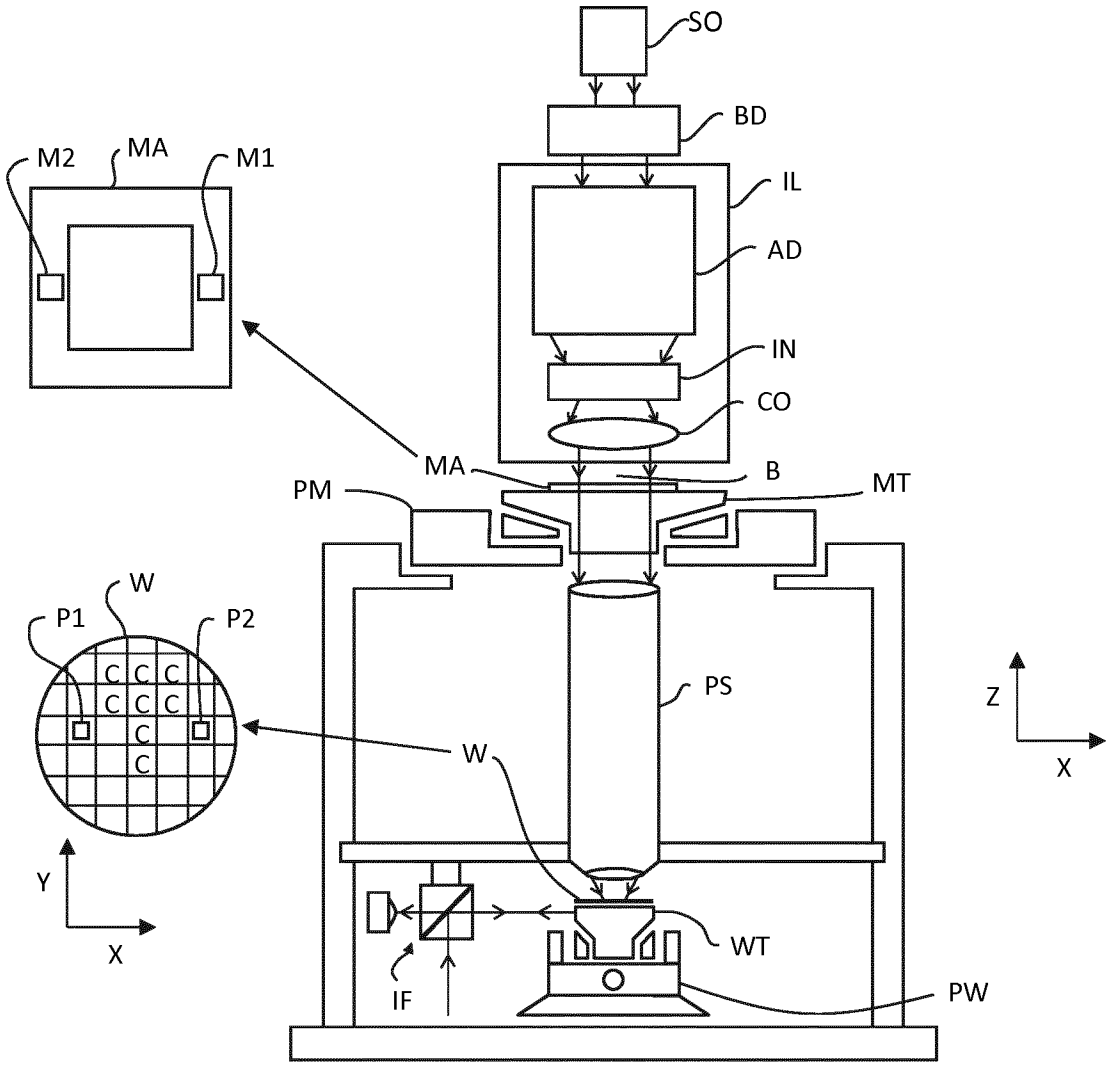
SO
BD
IL
AD
IN
CO
M2
MA
M1
MA
B
MT
PM
W
P1
P2
C C C
C C C
C
C
PS
Z
X
W
Y
X
WT
IF
PW

Fig. 13

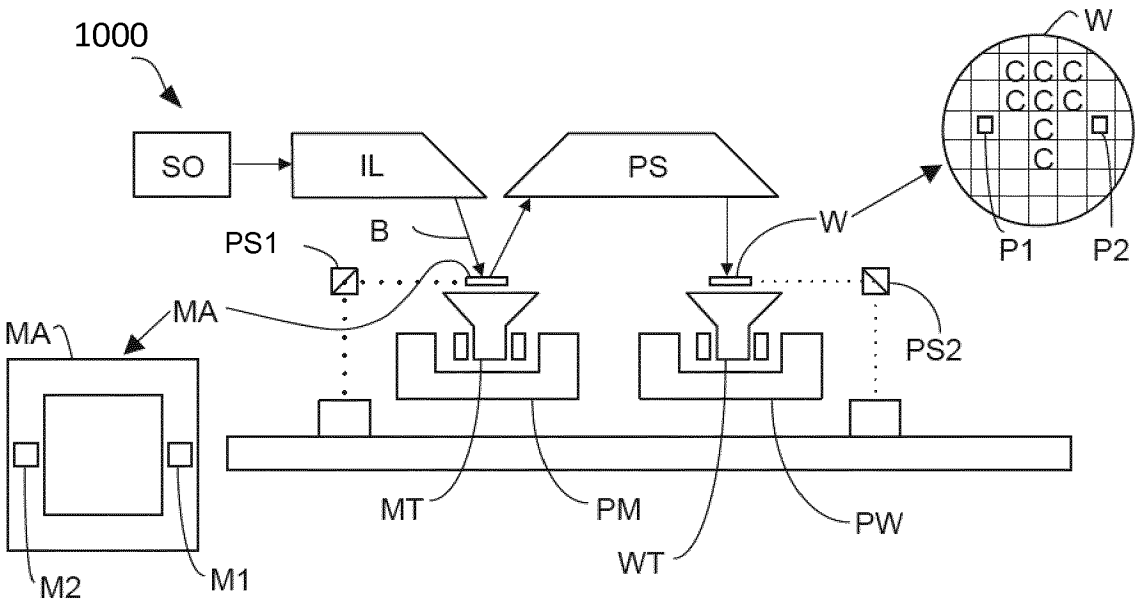

Fig. 14

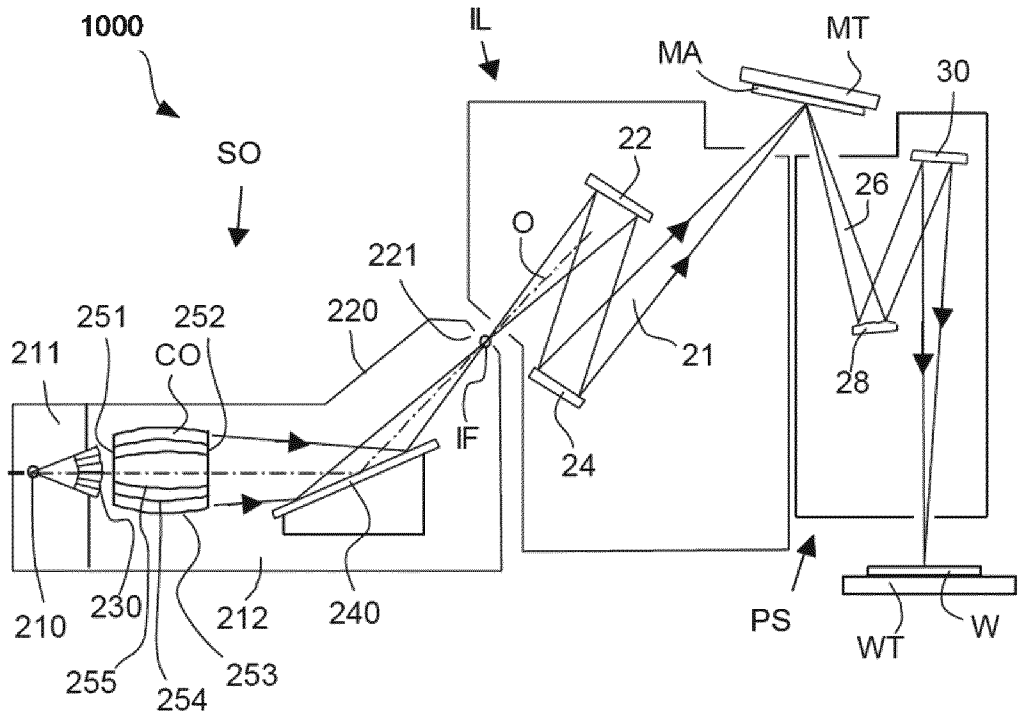
1000
IL
MA
MT
30
SO
22
26
O
221
220
251
252
211
CO
21
28
IF
24
210
230
212
240
PS
WT
W
255
254
253

Fig. 15

INTERNATIONAL SEARCH REPORT

International application No
PCT/EP2016/078445

A. CLASSIFICATION OF SUBJECT MATTER
INV. G03F7/20
ADD.

According to International Patent Classification (IPC) or to both national classification and IPC

B. FIELDS SEARCHED

Minimum documentation searched (classification system followed by classification symbols)
G03F

Documentation searched other than minimum documentation to the extent that such documents are included in the fields searched

Electronic data base consulted during the international search (name of data base and, where practicable, search terms used)
EPO-Internal

C. DOCUMENTS CONSIDERED TO BE RELEVANT

Category*	Citation of document, with indication, where appropriate, of the relevant passages	Relevant to claim No.
X	WO 2015/049087 A1 (ASML NETHERLANDS BV [NL]) 9 April 2015 (2015-04-09) abstract paragraphs [0051], [0052], [0090], [0099], [0100]; figure 2 -----	1-14
A	US 2015/042984 A1 (PANDEV STILIAN IVANOV [US]) 12 February 2015 (2015-02-12) paragraphs [0011], [0048] -----	1-14

☐ Further documents are listed in the continuation of Box C.

☒ See patent family annex.

* Special categories of cited documents :

"A" document defining the general state of the art which is not considered to be of particular relevance

"E" earlier application or patent but published on or after the international filing date

"L" document which may throw doubts on priority claim(s) or which is cited to establish the publication date of another citation or other special reason (as specified)

"O" document referring to an oral disclosure, use, exhibition or other means

"P" document published prior to the international filing date but later than the priority date claimed

"T" later document published after the international filing date or priority date and not in conflict with the application but cited to understand the principle or theory underlying the invention

"X" document of particular relevance; the claimed invention cannot be considered novel or cannot be considered to involve an inventive step when the document is taken alone

"Y" document of particular relevance; the claimed invention cannot be considered to involve an inventive step when the document is combined with one or more other such documents, such combination being obvious to a person skilled in the art

"&" document member of the same patent family

Date of the actual completion of the international search	Date of mailing of the international search report
22 March 2017	05/04/2017

Name and mailing address of the ISA/	Authorized officer
European Patent Office, P.B. 5818 Patentlaan 2 NL - 2280 HV Rijswijk Tel. (+31-70) 340-2040, Fax: (+31-70) 340-3016	Weckesser, Jens

1

INTERNATIONAL SEARCH REPORT

Information on patent family members

International application No
PCT/EP2016/078445

Patent document cited in search report	Publication date	Patent family member(s)	Publication date
WO 2015049087 A1	09-04-2015	CN 105765461 A	13-07-2016
		KR 20160067146 A	13-06-2016
		TW 201516598 A	01-05-2015
		US 2016246185 A1	25-08-2016
		WO 2015049087 A1	09-04-2015
US 2015042984 A1	12-02-2015	CN 105593973 A	18-05-2016
		EP 3033764 A1	22-06-2016
		KR 20160042989 A	20-04-2016
		SG 11201601027P A	30-03-2016
		TW 201514637 A	16-04-2015
		US 2015042984 A1	12-02-2015
		US 2016282731 A1	29-09-2016
		WO 2015023542 A1	19-02-2015