(No Model.) 3 Sheets—Sheet 1.

F. FANNING.

DRILLING MACHINE.

No. 590,721. Patented Sept. 28, 1897.

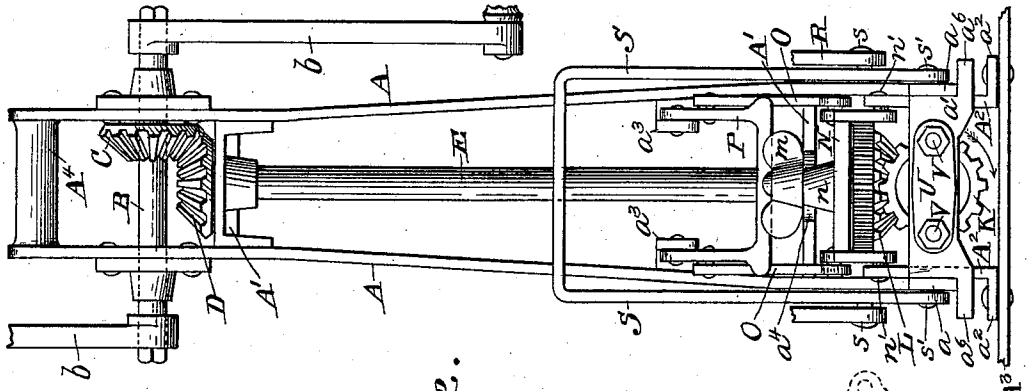

Fig. 2.

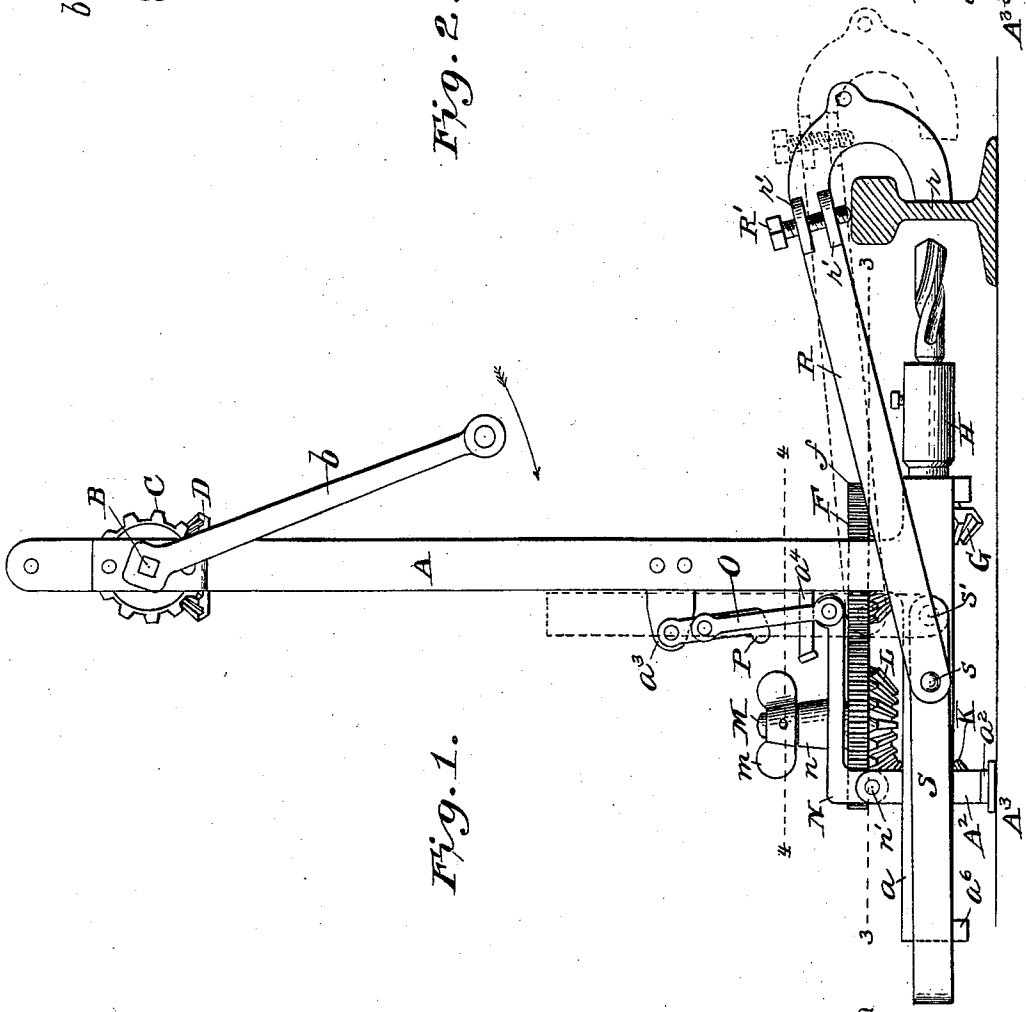

Fig. 1.

Witnesses
Jos. H. Blackwood
Albert B. Blackwood.

Inventor
Franklin Fanning,
By Jos. Schneider
Attorney

THE NORRIS PETERS CO., PHOTO-LITHO., WASHINGTON, D. C.

(No Model.) 3 Sheets—Sheet 2.

F. FANNING.

DRILLING MACHINE.

No. 590,721. Patented Sept. 28, 1897.

Fig. 3.

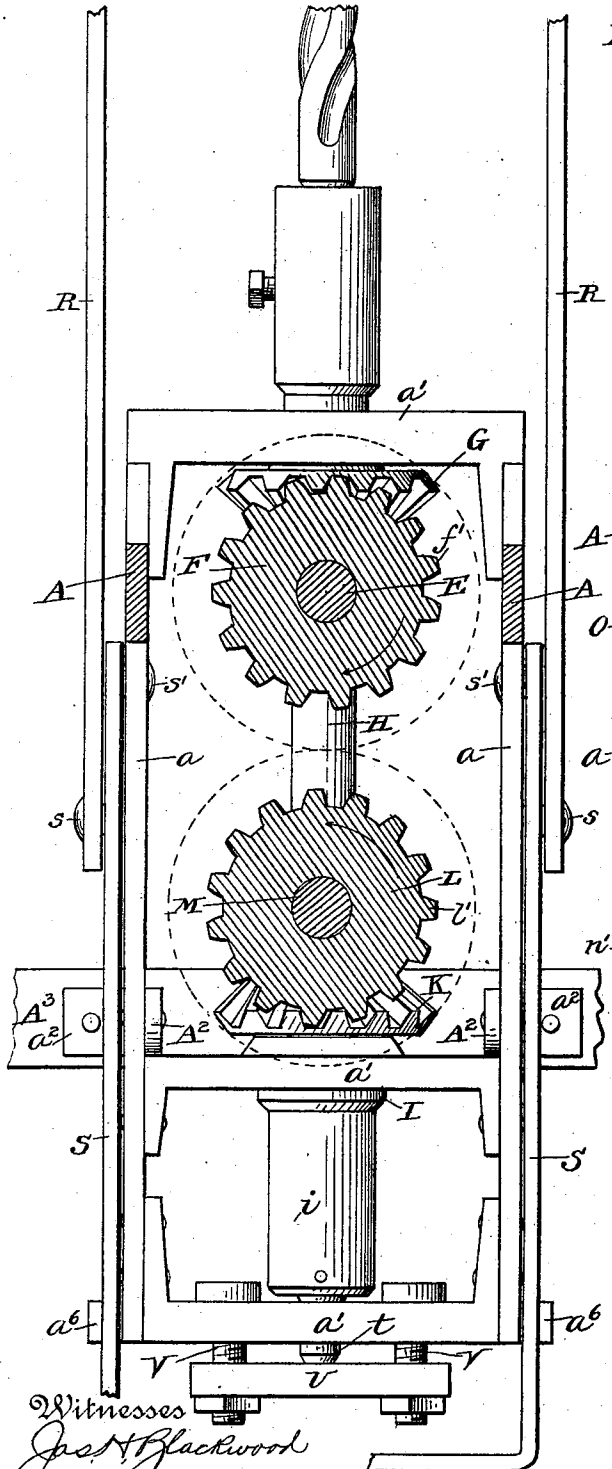

Fig. 4.

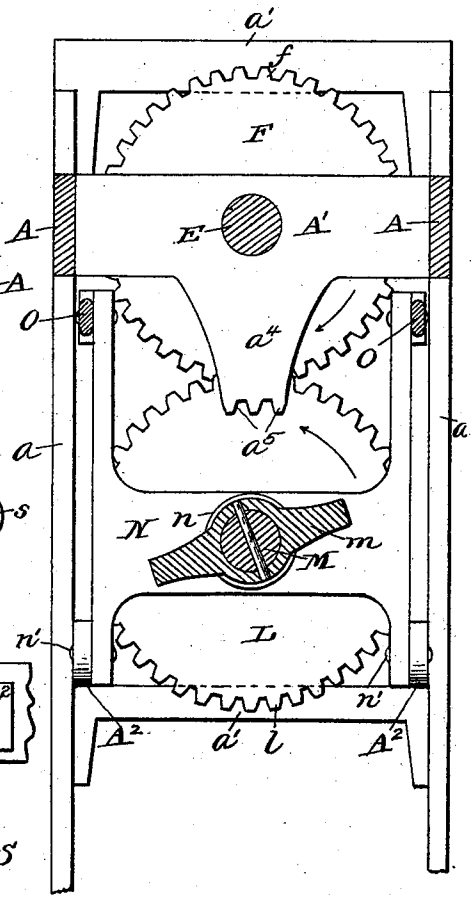

Witnesses
Jas. H. Blackwood
Albert B. Blackwood.

Inventor
Franklin Fanning,
By Geo. Whitney
Attorney

THE NORRIS PETERS CO., PHOTO-LITHO., WASHINGTON, D. C.

(No Model.) 3 Sheets—Sheet 3.

F. FANNING.

DRILLING MACHINE.

No. 590,721. Patented Sept. 28, 1897.

Fig. 5.

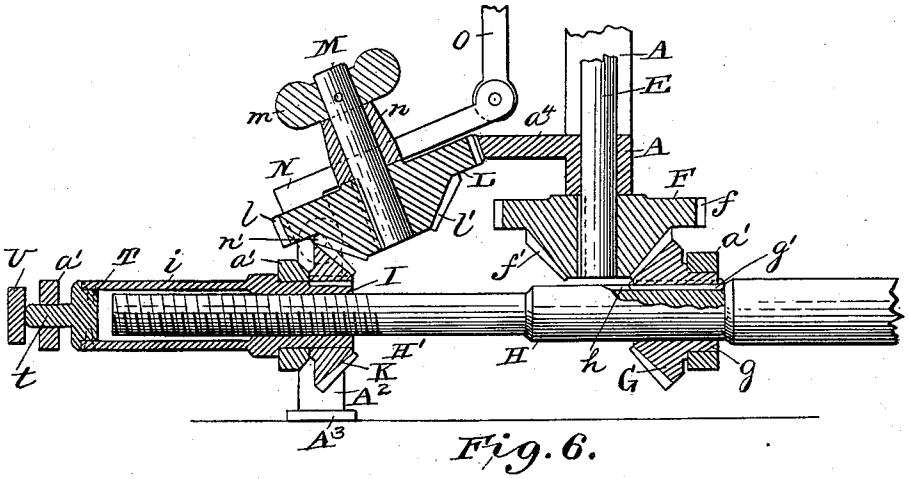

Fig. 6.

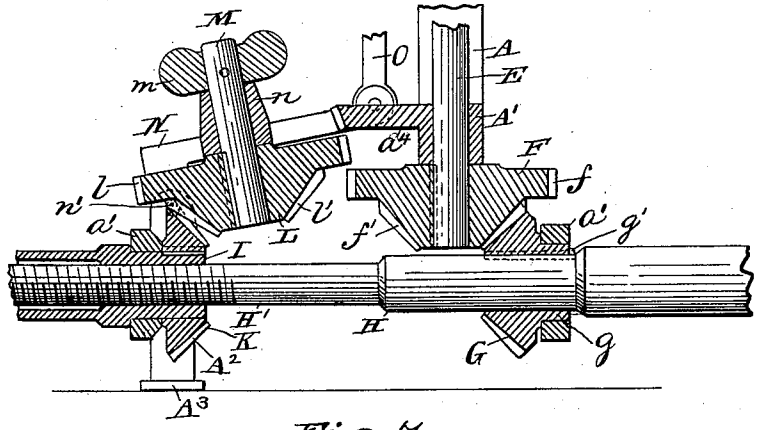

Fig. 7.

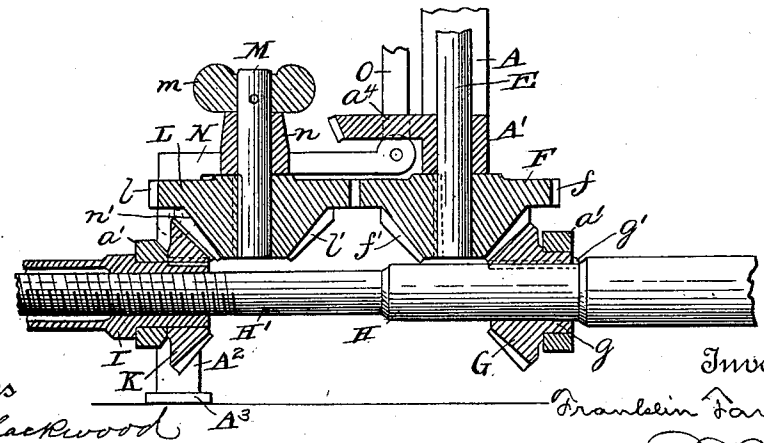

Witnesses
Jas. H. Blackwood
Albert B. Blackwood.

Inventor
Franklin Fanning.
By Geo. P. Whittemore
Attorney

THE NORRIS PETERS CO., PHOTO-LITHO., WASHINGTON, D. C.

UNITED STATES PATENT OFFICE.

FRANKLIN FANNING, OF ST. JOSEPH, MISSOURI.

DRILLING-MACHINE.

SPECIFICATION forming part of Letters Patent No. 590,721, dated September 28, 1897.

Application filed February 18, 1897. Serial No. 624,036. (No model.)

To all whom it may concern:

Be it known that I, FRANKLIN FANNING, a citizen of the United States, residing at St. Joseph, in the county of Buchanan and State of Missouri, have invented certain new and useful Improvements in Drilling-Machines; and I do declare the following to be a full, clear, and exact description of the invention, such as will enable others skilled in the art to which it appertains to make and use the same, reference being had to the accompanying drawings, and to the letters of reference marked thereon, which form a part of this specification.

My invention relates to portable drilling-machines for operating upon stationary objects, such as the rails of a railroad-track. Its objects are to provide for a continuous automatic feed instead of the intermittent ratchet feed heretofore used, to provide for quickly running the drill forward to its work and back away therefrom by means of the driving-gear, to provide for relieving the pressure upon the cutting edge of the drill without turning it backward in case it sticks in the hole or takes too rank a cut, and to provide for adjusting the bearing-points of the clamping-hooks so that they will always be in line with the drill.

In the drawings, Figure 1 is a side elevation of a track-drill embodying my improvements. Fig. 2 is an end elevation. Figs. 3 and 4 are top plan views on lines 3 3 4 4, respectively. Figs. 5, 6, and 7 are vertical sections of the gearing, drill-shaft, and feed-screw in different adjustments.

The frame consists of two standards A of inverted-T shape, the rear horizontal arm a of the T being longer than the other. These standards are parallel and are connected by cross-bars A′ a', which form bearings for the upright driving-shaft and the drill-shaft. Near the rear end of the frame are secured two upright short standards A^2, having flanged feet a^2, by which they may be secured to a cross-bar A^3. Secured between the tops of the standards is a handle A^4, by which to carry and steady the machine.

A driving-shaft B is journaled transversely in the upper part of the standards and carries one or more operating-cranks b. A bevel-gear C is secured on the shaft between the standards and meshes with a similar gear D on an upright shaft E, journaled in the cross-bars A′. A gear-wheel F is secured to the lower end of the shaft E and has an upper portion f, constituting a plain spur-gear, and a lower portion f', constituting a bevel-gear. These may be integral, as shown, or otherwise formed. The bevel-gear f' meshes with the bevel-gear G, which has a hub g, horizontally mounted in the front cross-bar a' and rotatable therein, being held in place by the bevel-gear f'. The gear G is splined to the drill-shaft H, having a key g', which engages a keyway h in the shaft.

If preferred, the shaft may have a spline and the gear a groove fitting thereon. This enables the shaft H to slide longitudinally through the gear but compels it to rotate with the gear.

The rear end of the drill-shaft is screw-threaded at H′ and meshes with a nut I, which has a cylindrical exterior, so as to rotate freely in a bearing in one of the cross-bars a'. A bevel-gear K is keyed to said nut, and meshing with said gear is a bevel-gear l', secured to an upright short shaft M, which rotates in a bearing in a boss n on the frame N. The upper end of the shaft M has a thumb-piece m secured to it above the boss n, which supports the shaft and enables it to be turned by hand when desired.

Integral with or attached to the bevel-gear l' is a spur-gear l, normally meshing with the spur-gear f, the two gears $l\,l'$ forming a composite gear L like the gear F.

It will be seen that when the upright shaft E is rotated it not only imparts motion to the drill-shaft through the bevel-gears f' G, but it also rotates the nut I in the same direction through the spur-gears $f\,l$ and the bevel-gears l' K. In order to produce a relative rotation of the nut and the feed-screw, it is necessary to retard the nut. This is most conveniently done by giving the spur-gear l a greater number of teeth than the spur-gear f. The ratio is determined by the material to be operated upon and the pitch of the feed-screw H′. It can be so proportioned that the drill will gain one turn on the nut in from twenty-five to forty revolutions, as may be desired. In drilling steel rails for three-quarter-inch bolts I find a desirable feed to be three hundred and

six turns of the drill-shaft to one inch of feed. This will be produced by a feed-screw having nine threads to the inch, with gears f l having thirty-four and thirty-five teeth respectively. It will be seen that the arrangement is similar to the back gear on a lathe.

The frame N, carrying the composite gear L, is hinged at its rear end to the frame of the machine, preferably to the upper ends of the short standards A^2. The front end of the frame N is connected by links O with a U-shaped lever P, hinged at its upper ends, preferably to ears a^3, projecting from the standards A.

The lower cross-bar A′ between the standards A has a rearwardly-extending arm a^4, in the back end of which are cut one or more teeth a^5. The arm is so located that when the frame N is lifted, the teeth of the spur-gear l after disengagement from the spur-gear f will be brought into engagement with the teeth a^5, whereby the gear l will be locked and prevented from turning. Since the hinge-pivots n' of the frame N are in line with the pitch-lines of the bevel-gears l and K and their teeth are deep enough to remain always in mesh, the locking of the spur-gear l also locks the nut I stationary. This position of the parts is shown in Fig. 5. It enables the drill-shaft to run forward or backward rapidly by turning the cranks b, as will be readily understood.

In case a twist-drill takes too deep a cut and sticks in the hole it is very desirable to be able to slack off the feed without turning the drill backward, because under such circumstances a backward motion will nearly always break off the cutting edge of a twist-drill. To effect this slacking of the feed, the frame N is lifted only far enough to disengage the spur-gears f l, as shown in Fig. 6. The gear L can now be turned by hand by means of the thumb-piece m, thereby rotating the nut I forward and consequently drawing back the drill-shaft very slightly without turning it. The pressure having been relieved, the gear l can be dropped into mesh again, as shown in Fig. 7. This provision for relieving the feed I regard as of great importance, because track-laborers are not usually skilled in the art of grinding twist-drills, and without some such pressure-relieving device many drills are liable to be broken.

The machine is held up to the rail preferably by means of the clamping-hooks R, which have blunt ends r to rest against the farther side of the rail, and are provided at a point above the rail with upright adjusting-screws R′, passing, preferably, through lugs r' on the hooks. By means of the screws the hooks can be adjusted with reference to the height of the rail so that they will always bear directly in the plane of the axis of the drill. Once set for the particular height of rail being operated on they need not be changed, and the bearing-point for the hooks is thus always at the right place.

The rear ends of the hooks are pivoted to back levers S at a point s in the rear of where the front ends of said back levers are pivoted at s' to the arms a of the standards A. The rear ends of the back levers S are preferably united. Indeed, they may be formed of a piece of flat metal bent to a U shape, as shown. When the back levers are raised, as shown in dotted lines in Fig. 1 and in full lines in Fig. 2, the hooks are thrown forward and the machine can be easily set in position or disengaged from the rail, as desired. On dropping the back levers the hooks are pressed against the rail and the pivots s s' are brought in line with them, so that the thrust of the drill is effectively resisted. Projecting lugs a^6 on the rear cross-bar form stops to prevent the back levers from dropping too far. The rear end of the feed-nut has a thrust-bearing to sustain the longitudinal pressure of the drill-shaft. To this end the nut is preferably tubular, having a sleeve i extending rearwardly and serving as a housing for the screw H′. In the rear end of the sleeve is a steel plug T, having a central pivot-stud t, passing through the rear cross-bar a' and abutting against a steel tail-block U, secured to the cross-bar by bolts V to take up any wear. This construction reduces the friction at this point to a minimum.

The operation of my improved drilling-machine is as follows: The gear L is first thrown out of gear by raising the short U-shaped lever P, thus interlocking the gear and holding the nut I stationary. The drill-shaft and drill are then run back by the cranks and the machine placed in position with the hooks and back levers raised. The hooks are then dropped over the rail and the back levers are lowered. The drill-shaft and drill are then driven forward by the cranks until the point of the drill comes in contact with the rail at the proper place for the hole. The short U-shaped lever P is then lowered, bringing the spur-gears into mesh and holding them so by reason of the pivots of the lever and the links O coming into line, as shown in Fig. 1. This effectively resists the tendency of the bevel-gear l' to lift and separate from the bevel-gear K when in operation. The machine is now ready for work.

To remove the machine from the rail when the job is finished or to permit a train to pass, raise the back levers and thereby release the hooks, lift the hooks, and the machine is free.

While my invention is especially designed as a track-drilling machine, yet it is evidently applicable to a variety of uses, and I do not limit it to that class of work.

Having thus described my invention, what I claim, and desire to secure by Letters Patent, is—

1. In a drilling-machine, a longitudinally-movable drill-shaft and feed-screw, a nut meshing with said screw and rotatably mounted, a bevel-gear secured to the nut, a driving-shaft geared to the drill-shaft, and interme-

diate back gearing between said shaft and the bevel-gear on the nut, substantially as described.

2. In a drilling-machine, a longitudinally-movable drill-shaft and feed-screw, a gear splined to said shaft, a rotatable nut meshing with the feed-screw and provided with a gear, two shafts geared respectively to said gears, intermeshing spur-gears connecting said two shafts, and having a different number of teeth, and means for disengaging said spur-gears without disconnecting the shafts from the gears on the drill-shaft and nut, substantially as described.

3. In a drilling-machine, a longitudinally-movable drill-shaft and feed-screw, a gear splined to said shaft, a rotatable nut meshing with said screw and provided with a gear, two shafts geared respectively to said gears, intermediate gearing connecting said shafts, means for disengaging said intermediate gearing, and means for locking the nut when said gearing is disengaged, substantially as described.

4. In a drilling-machine a longitudinally-movable drill-shaft and feed-screw, a gear splined on said shaft, a rotatable nut meshing with said screw, and provided with a gear, two normally parallel shafts geared respectively to said gears, intermeshing spur-gears on said shafts, means for disengaging said spur-gears, and a stationary arm to engage with and lock one of said spur-gears when disengaged, substantially as described.

5. In a drilling-machine, a drill-shaft, feed-screw and rotatable feed-nut, a driving-shaft geared to the drill-shaft, a hinged frame, a short shaft journaled in said frame and geared to the nut, spur-gears connecting said driving-shaft and short shaft, and a stationary arm having one or more teeth to engage with the spur-gear on the short shaft when the hinged frame is tilted, substantially as described.

6. In a drilling-machine, a drill-shaft, feed-screw and rotatable feed-nut, a driving-shaft geared to the drill-shaft, a hinged frame, a lever for lifting said frame, links connecting the lever with the frame, a short shaft journaled in said frame and geared to the feed-nut, and intermeshing separable spur-gears on the driving-shaft and short shaft, substantially as described.

7. In a drilling-machine, the combination with the drill-shaft, the feed-screw and the rotatable feed-nut, of a driving-shaft geared to the drill-shaft, a short shaft geared to the nut, separable intermeshing spur-gears on the driving-shaft and short shaft, said gears having a different number of teeth, a frame hinged on a line intersecting the pitch-lines of the gear on the nut and the gear on the short shaft, and carrying said short shaft, a thumb-piece on the short shaft, an arm carrying teeth, and a lever connected with the hinged frame to lift the same, substantially as described.

8. In a drilling-machine, the combination with a frame having cross-bars, of a rotatable feed-nut having a tubular extension, a pivot-stud at the end of said extension having a bearing in and projecting through one of said cross-bars, a thrust-bearing block for said stud, and adjusting-screws connecting said block with said cross-bar, substantially as described.

In testimony whereof I affix my signature in presence of two witnesses.

FRANKLIN FANNING.

Witnesses:
JOHN I. MCDONALD,
JAS. B. SHIRLEY.