E. L. MOSELEY & E. D. MENDENHALL.

SAFETY DEVICE FOR ELEVATOR DOORS.

APPLICATION FILED MAR. 28, 1912.

1,068,692.

Patented July 29, 1913.

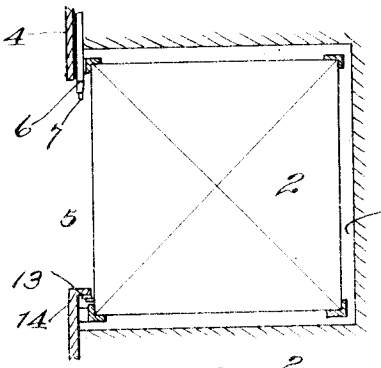

Fig. 1.

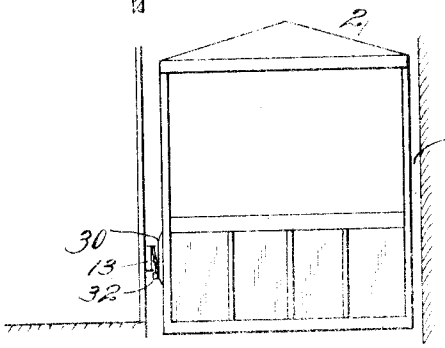

Fig. 2.

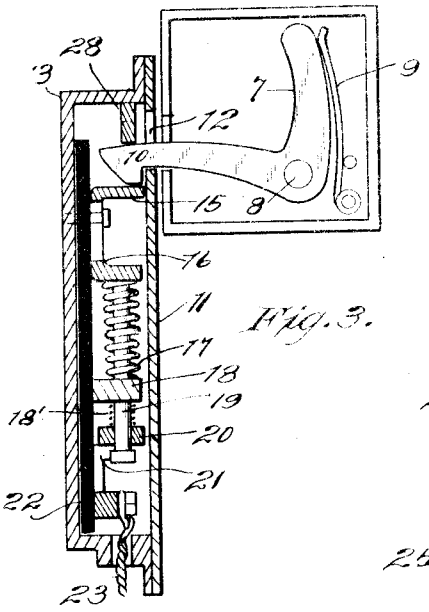

Fig. 3.

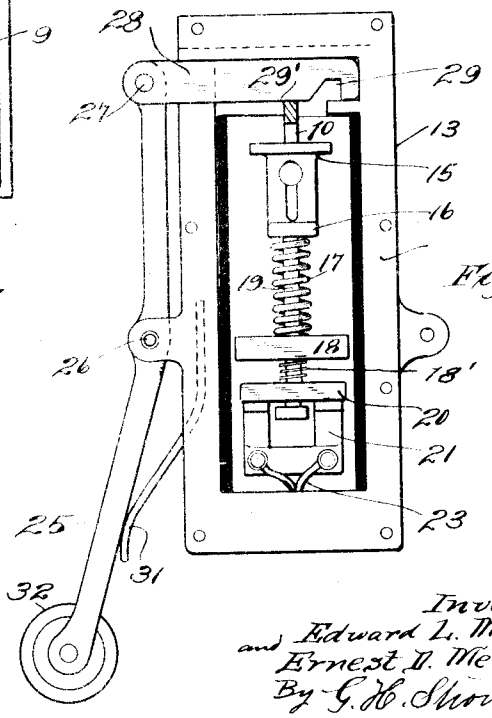

Fig. 4.

Witnesses,
F. E. Maynard.
E. B. Brue

Inventors,
Edward L. Moseley
and Ernest D. Mendenhall,
By G. H. Strong.
their Attys

UNITED STATES PATENT OFFICE.

EDWARD L. MOSELEY AND ERNEST D. MENDENHALL, OF OAKLAND, CALIFORNIA, ASSIGNORS TO SAFETY APPLIANCE MANUFACTURING CO., OF SAN FRANCISCO, CALIFORNIA, A CORPORATION OF CALIFORNIA.

SAFETY DEVICE FOR ELEVATOR-DOORS.

1,068,692. Specification of Letters Patent. Patented July 29, 1913.

Application filed March 28, 1912. Serial No. 686,749.

To all whom it may concern:

Be it known that we, EDWARD L. MOSELEY and ERNEST D. MENDENHALL, both citizens of the United States, residing at Oakland, in the county of Alameda and State of California, have invented new and useful Improvements in Safety Devices for Elevator-Doors, of which the following is a specification.

This invention relates to safety devices for elevators.

The object of the present invention is to provide a simple, substantial and automatic bolting device whereby elevator doors are locked closed in front of an elevator shaft when the elevator car is at any point in its shaft other than at a given floor.

It is also the object of the present invention to provide means for locking the doors to elevator shafts closed until times when an elevator car is immediately at the floor on which the door is mounted; and particularly to provide a mechanism controlling an electric circuit of such design and construction that when the door is opened to permit access or egress to or from an elevator car, that the electric current energizing the elevator motor will be cut out when the door is being opened, and during the time that the door remains open and until it is finally closed and latched.

The invention consists of the parts and the construction and combination of parts as hereinafter more fully described and claimed, having reference to the accompanying drawings, in which:

Figure 1 is a plan view of an elevator car operating in a shaft with the invention shown diagrammatically. Fig. 2 is a side elevation of the elevator car, showing the bolt tripper. Fig. 3 is a sectional detailed view showing the door latch in operative locked position in the safety keeper. Fig. 4 is a front elevation of the safety keeper with the face plate removed.

In Figs. 1 and 2 there is shown an elevator car 2, operating in a shaft 3, of a building; there being provided at one side of the shaft 3, a wall 4 having an opening 5, across which may be adjusted an elevator door 6, mounted to slide across the opening 5 of the wall to close the same.

An important feature of the present invention is to provide a mechanism which will automatically and safely lock the door 6 in closed position so that it cannot be opened unless an elevator car is standing at the level of the floor on which the door may be locked.

In addition to the feature of automatically and safely locking the door closed, the invention consists in combining with the door locking mechanism a device operated by the door latch to close an electric circuit in which is mounted the motor, the function of which is to drive or move the elevator car 2.

In the illustrated embodiment of the invention, there is shown as mounted at one edge of the door 6, a latch 7 pivoted on a fulcrum 8 and normally depressed by a spring 9; the latch being so mounted on the door 6, that when the door is closed over the opening in the wall the hook point 10 of the latch 7 will pass through a face plate 11, having an aperture 12 which is designed to receive the hook end 10 of the latch 7, as the door is closed to bring the latch in juxtaposition with the face plate 11.

The lower edge of the aperture 12 in the face plate 11, which latter is attached to a keeper or box 13, adapted to be securely attached to or adjacent to a jamb 14 of the elevator doorway, is at such a plane relative the door 6, that the hook end 10 of the latch 7 will snap down inside of the keeper plate 11, by reason of the force of the spring 9 acting on the latch 7. The hook end 10, will enter the aperture 12 of the keeper plate 11 and snap downwardly, engaging the upper shoulder 15 of a slide 16 movable within the keeper box 13 and normally projected toward the aperture 12 by the expansible spring 17 which surrounds a stem 19 secured on the slide 16 and being guided in a bearing 18. On the lower end of the plunger 19 is slidable a bar or plate 20, adapted when depressed to engage contacts 21, secured on an insulating base 22 in the keeper box 13. Surrounding the stem, 19, between the bearing, 18, and the bar, 20, is a spring, 18', said spring being on the opposite side of the guide from the spring, 17, one of these springs being for the purpose of breaking the contact when the latch is withdrawn and the other spring adapted to react against the contact bar.

The contact members 21 are connected to

suitable lead wires 23, in which may be connected the elevator operating motor, so that when the door 6, carrying the spring actuated latch 7, is pushed across the doorway the hook point 10 of the latch will pass in the aperture 12 and snapping over its lower edge will, due to the force of the spring 9, depress the spring supported slide shoulder 15, thus depressing the switch plate 20 to carry it into electrical contact with the fixed contacts 21, thus closing the circuit through the wires 23 at this point. From this it will be seen that when the elevator car is in position at a given floor on which is mounted the door 6, the latter is closed with the hook 10 depressing the circuit closing devices, then the operator in the elevator car may operate the elevator switch so that he may operate the car.

When the car is at the floor it engages an arm 25 pivoted at 26 on the side of the keeper box 13, and one end of which is connected as at 27 to a locking bolt 28, which is mounted in one end of the keeper box 13 and which bolt 28 is formed with an indentation 29 at its inner end, which during the time that a car is at a given floor stands in coincidence with the aperture 12, so that the latch hook 10 may freely enter the aperture 12 of the keeper plate 11, and project through or into the indent 29 of the bolt 28.

There may be mounted on the car, a cam or shoe 30, which is adapted as the car approaches a certain floor to engage the arm 25 which is projected in the path of the shoe 30, by the spring 31 attached to the keeper box 13. There may be mounted on the contact end of the arm 25 an anti-friction roller 32, with which the shoe 30 will contact during its movement with the car 2 in the elevator shaft.

When the operator in the car brings the latter to such a position relative to a floor in a building that the shoe 30 of the elevator car will engage and depress the arm 25, the latter will be automatically operated by the movement of the car to withdraw the bolt 28 slightly from the box 13, bringing the indentation 29 over the inwardly projecting hook 10 of the latch 7, at which time the operator may then press on the upwardly extending part of the pawl or latch 7, to so actuate the latter as to bring the hook point 10 above the edge of the aperture 12 so that he may open the door as the hook point 10 frees itself from the keeper plate 11. As soon as the shoe 30 on the elevator car operates the lever arm 25, and this in turn shifts the safety bolt 28, the spring 17 will tend automatically to actuate the slide 16 to lift the inwardly projecting hook 10 of the latch 7 and tending to break the circuit by separating the plate 20 from the stops 21. When the bolt 28 is shifted by the lever 25, then the operator may swing the latch 7 on its fulcrum 8 against the pressure of the spring 9, and before the side movement of the door 6 carrying with it the latch 7, the spring 17 will become effective to break the circuit by lifting the plate 20 from the contacts 21, thus making it impossible for the car to be started when the door latch 7 is tilted about its fulcrum 8 to sufficiently permit the spring 17 to actuate the slide 16. As the operator by pressing on the tiltable latch 7, moves the door 6 edgewise the circuit line 23 will be broken and until the door 6 is again closed and the hook point 10 projected into the keeper box 13, and presses downwardly on the slide 16 to move the circuit closing plate 20 into contact with its coöperative contacts 21, it will be impossible to move the car, unless the latch point 10 is permitted to enter the keeper box 13 and depress the slide 16 then when the circuit is closed by the plate 20 the operator may close the car switch to energize the elevator motor and move the car up or down the shaft.

In order to render it impossible for any one to open the elevator door 6, unless the car is in position at its floor, the arm 25 is provided and will automatically move under the impulse of its actuating spring 31 as the elevator shoe 30 moves upwardly or downwardly away from the operative end of the lever 25. As the shoe 30 so moves away and the spring 31 actuates the lever arm 25 the safety bolt 28 will be projected inwardly in the keeper box 13 until the indentation or recess 29 is carried from in position adjacent the aperture 12 and over the hook 10, so that the lower flat edge 29′ of the safety bolt 28 will ride over the adjacent inwardly projecting point 10 and effectually lock this in its lowermost position. Unless the elevator shoe 30 is moved away from operative contact with the lever arm 25, the spring 31 through the medium of the arm 25 will shift the safety bolt inwardly sufficiently to ride over the hook 10 to effectually retain this in position in the keeper box 13 behind the keeper plate 11 and until the elevator shoe 30 again contacts with and actuates the lever arm 25 to shift the safety bolt 28 and carry the indentation therein over the hook point 10, it will be impossible to move the door or the latch.

Having thus described our invention, what we claim and desire to secure by Letters Patent is—

1. A door locking and circuit breaking device comprising a latch, a keeper casing with a shallow chamber and a keeper plate at one side for the reception of the latch, electric terminals in the chamber, a longitudinally extending stem centrally arranged in the chamber and having a part at one end engageable and operable by the latch when in the casing, and having at its opposite end a sliding contact bar movable against the ter-

minals when the latch actuates the stem, a guide on the back of the casing for said stem, and springs surrounding the stem on the opposite faces of said guide, one for breaking the contact when the latch is withdrawn and the other reacting against the contact bar.

2. A door locking and circuit breaking device comprising a latch, a keeper casing with a shallow chamber and a keeper plate at one side for the reception of the latch, electric terminals in the chamber, a longitudinally extending stem centrally arranged in the chamber and having a part at one end engageable and operable by the latch when in the casing, and having at its opposite end a sliding contact bar movable against the terminals when the latch actuates the stem, a guide on the back of the casing for said stem, springs surrounding the stem on the opposite faces of said guide, one for breaking the contact when the latch is withdrawn and the other reacting against the contact bar, and a bolt movable into one side of the casing for preventing the withdrawal of the latch.

In testimony whereof we have hereunto set our hands in the presence of two subscribing witnesses.

EDWARD L. MOSELEY.
ERNEST D. MENDENHALL.

Witnesses:
JOHN H. HERRING,
GENEVIEVE S. DONELIN.