(No Model.) 2 Sheets—Sheet 1.

T. N. DERBY.

FOOT REST.

No. 456,557. Patented July 28, 1891.

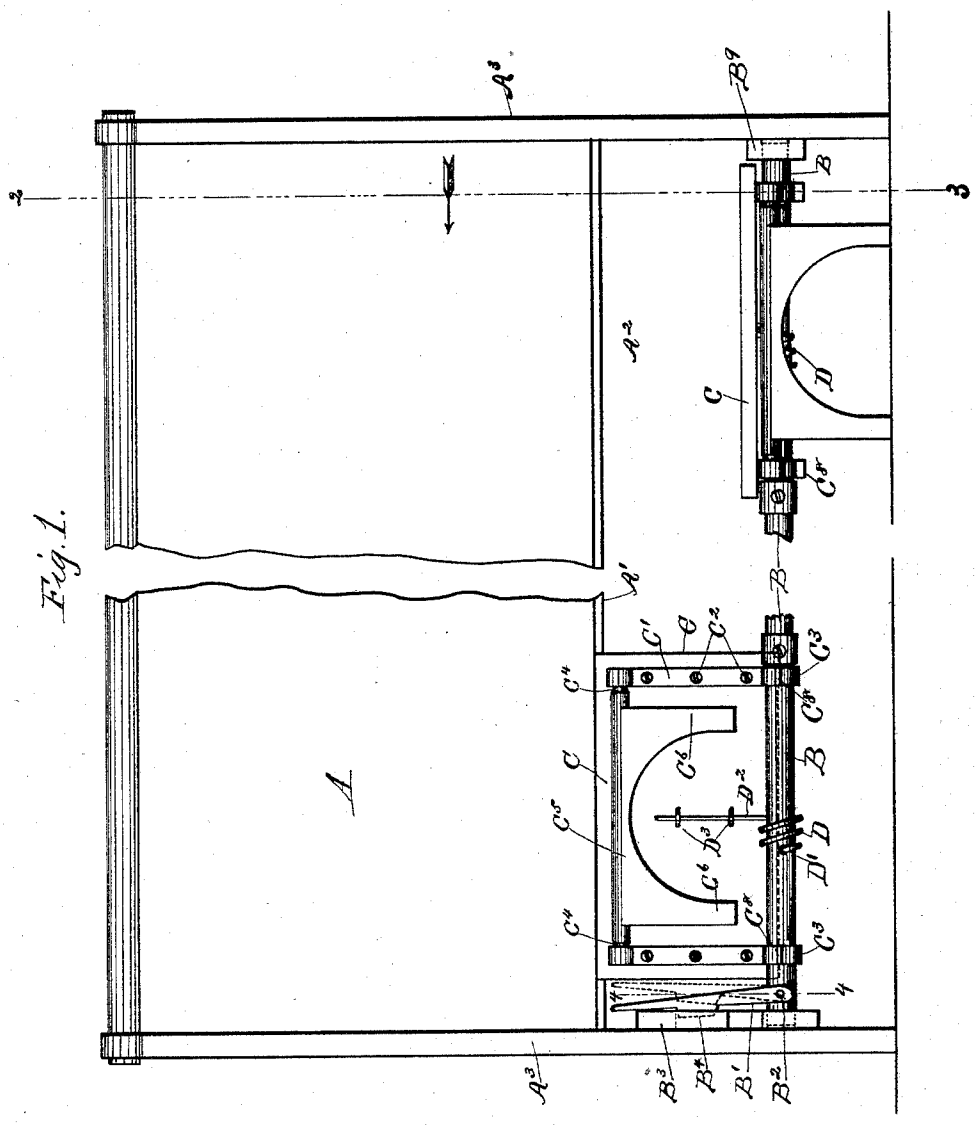

Fig. 1.

WITNESSES:
Frank C. Curtis.
John T. Booth.

INVENTOR:
Thomas N. Derby,
by Geo. A. Mosher
atty.

THE NORRIS PETERS CO., PHOTO-LITHO., WASHINGTON, D. C.

(No Model.) 2 Sheets—Sheet 2.

T. N. DERBY.

FOOT REST.

No. 456,557. Patented July 28, 1891.

Fig. 3.

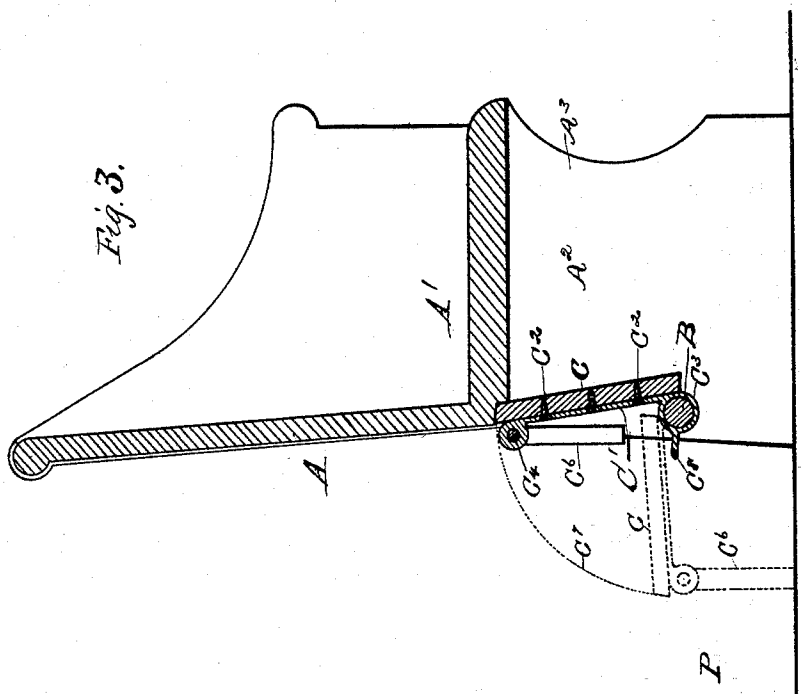

Fig. 2.

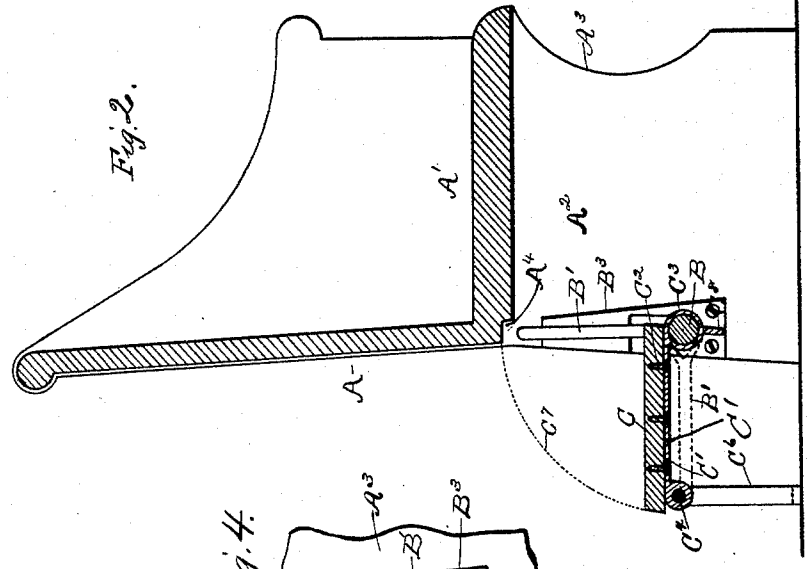

Fig. 4.

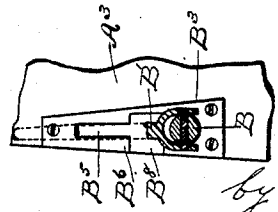

WITNESSES:
Frank E. Curtis.
John T. Booth.

INVENTOR:
Thomas N. Derby,
by Geo. A. Wahr
atty.

THE NORRIS PETERS CO., PHOTO-LITHO., WASHINGTON, D. C.

UNITED STATES PATENT OFFICE.

THOMAS N. DERBY, OF ROUND LAKE, NEW YORK.

FOOT-REST.

SPECIFICATION forming part of Letters Patent No. 456,557, dated July 28, 1891.

Application filed February 8, 1890. Serial No. 339,702. (No model.)

To all whom it may concern:

Be it known that I, THOMAS N. DERBY, a citizen of the United States, residing at Round Lake, county of Saratoga, and State of New York, have invented certain new and useful Improvements in Foot-Rests, of which the following is a specification.

My invention relates to such improvements; and it consists of the novel construction and combination of parts hereinafter described and subsequently claimed.

Reference may be had to the accompanying drawings and the letters of reference marked thereon, which form a part of this specification. Similar letters refer to similar parts in the several figures therein.

Figure 1 is a view in rear elevation of the ends of a pew-seat with the middle portion broken away, showing two of my improved foot or knee rests supported thereby, the one on the left being swung up out of use and the other being in position for use by the occupant of the next seat in rear of the one shown. Figs. 2 and 3 are vertical cross-sections of two seats arranged one in front of the other to form a passage-way between them, taken on the plane indicated by the broken line 2 3 in Fig. 1, viewed in the direction of the arrow thereon, Fig. 2 showing the rest in position for use, and Fig. 3 showing the rest swung up under the seat out of use. Fig. 4 is a cross-section of the rock-shaft and operating-lever, taken on the broken line 4 4 in Fig. 1, the upper end of the lever being broken away and the lever-locking plate being shown in elevation secured to a portion of the end seat-support A^3.

My improved foot or knee rest is especially adapted for use in church-pews, being made easily accessible for use and adapted to be quickly swung up out of use with the foot to leave the passage-way along the pew free and clear of all obstructions, thereby permitting free ingress and egress to the occupants. The rests are so arranged that each can be swung into or out of its position for use independently of the others or all together, as may be desired.

A is the back of a pew-seat, A′ the seat, and A^2 the space under the seat. The rock shaft or bar B has end bearings in the upright seat-supports A^3 at the ends of the pew. The shaft is provided at one end with a locking and operating bifurcated lever B′, pivoted at B^2 upon the shaft to swing in the same plane with the shaft to and from the locking and bearing plate B^3, secured to the upright A^3. When the lug or flange B^4 on the lever is forced into recess B^5 behind the stop B^6, the shaft is locked and becomes fixed in its bearings. The shaft supports the rests C, hinged thereon by means of the strap-hinges C′, secured to the rest, as by screws C^2. One end of each strap is provided with an eye C^3, adapted to receive and fit loosely upon the shaft. The other end of each strap is provided with a cone-bearing adapted to receive the cones C^4, loosely fitting therein and projecting from the ends of the leg-frame C^5. The leg-frame thus hinged to the swinging edges of the rest is preferably made of a single piece of cast metal, having the supporting-legs C^6. When desired, the rest may be partly controlled by a spring.

I have shown a coil-spring D surrounding the shaft, one end of which D′ is fixed in the shaft, while the other end D^2 is secured to the rest, as by the staples D^3, whereby its resilient force is exerted to swing the rest up under or against the seat to an approximately vertical position, like that shown by the solid lines in Fig. 3. The power of the spring is preferably such that when the rest is swung down for use to the horizontal position, (shown by the solid lines in Fig. 2,) or to a lower position, as shown by the dotted lines in Fig. 3, the spring is not able to overcome the weight of the rest, and the latter will remain in the desired position until swung part way up from the horizontal position toward the seat, after which the spring will carry it to the position shown in Fig. 3 under the seat, leaving the passage-way P between the two seats clear of obstructions. As the rest swings through the arc, represented by the curved dotted line C^7, from the position shown in Fig. 2 to that shown in Fig. 3, the leg-frame and legs C^6 swing upon the cone-bearings from the relative position shown in Fig. 2 to that shown in Fig. 3.

The rests are each provided with levers C^8, projecting radially from the eye-hinges, to

enable the operator to swing the rests by pressing his foot upon one of such levers or lugs.

A^4 indicates a recess or stop formed in the rear of the seat to receive the edge of the foot-rest when raised to about a vertical plane. This prevents the turning of the foot-rest entirely over, and permits it to be held by the spring out of the passage, in convenient position to be depressed by the application of the foot to the lever C^8.

I am aware that foot-rests made revoluble on pivots have been combined with springs, and I do not broadly claim such device.

When desired, all the rests may be swung down to the position shown in Fig. 2 at once by means of the rock-lever B′, it only being necessary to swing the lever on its pivot out from the locking-plate B^3 to the position shown by the dotted lines in Fig. 1 and then forward to about the position indicated by the dotted lines B′ in Fig. 2. When the lever B′ is locked in the position shown in Fig. 1, the upper end of the flange B^4, resting in the recess B^5, bears against the plate at the upper end of the recess and holds the shaft down and prevents it from being lifted from its bearing in the lower end of the plate. The plate is provided with a lateral opening B^8, leading from the shaft-bearing, through which the contiguous end of the shaft can be removed from the plate and the other end of the shaft then withdrawn from its bearing B^9, which is a simple socket-bearing secured to the upright A^3, thus rendering the shaft easily detachable from its bearings without removing any of the supporting parts. I am thus able to provide a foot or knee rest which may be easily and quickly swung into and out of the passage-way P between two seats arranged one in front of the other, substantially as indicated by the relative position of the seats in Figs. 2 and 3.

What I claim as new, and desire to secure by Letters Patent, is—

1. The combination, with a rock-shaft and shaft-supporting bearings, of a series of foot-rests hinged at one edge, independently of each other, to such shaft, rest-controlling-spring connections between the several rests and the shaft, and a rock-lever connected with such shaft, substantially as described.

2. The combination, with a rock-shaft and shaft-supporting bearings, of a foot-rest secured at one edge to such shaft, a rock-lever hinged to such shaft to swing in its axial plane, and a lever-locking stop, said lever being adapted to turn the shaft and also to be moved into and out of engagement with said stop, substantially as described.

In testimony whereof I have hereunto set my hand this 4th day of February, 1890.

THOMAS N. DERBY.

Witnesses:

FRANK C. CURTIS,

CHAS. L. ALDEN.