Dec. 4, 1951 L. C. BROOKS 2,577,304

CONTAINER

Filed April 11, 1946 2 SHEETS—SHEET 1

Fig. 1.

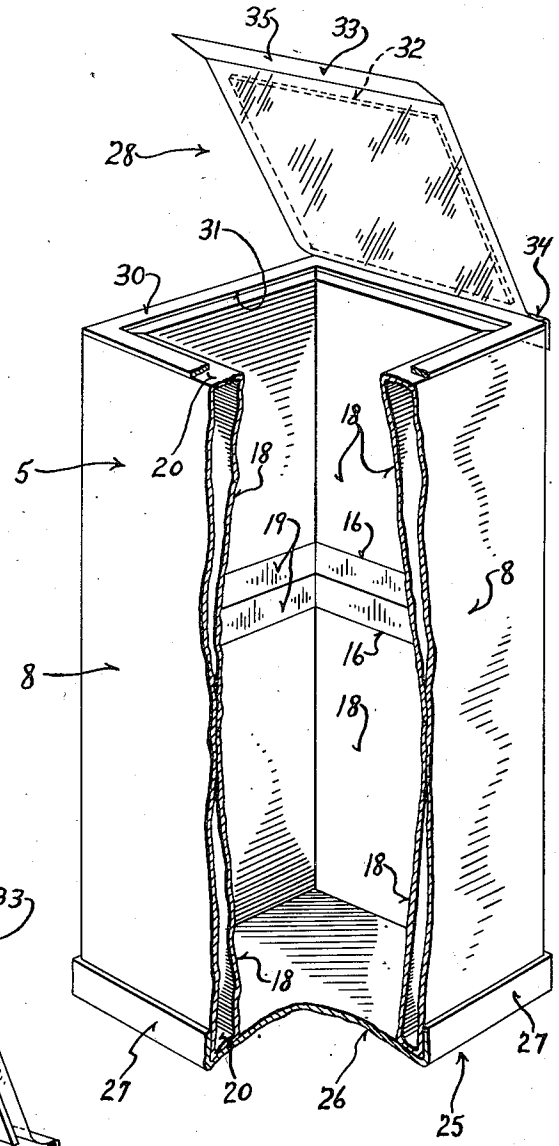


Fig. 3.

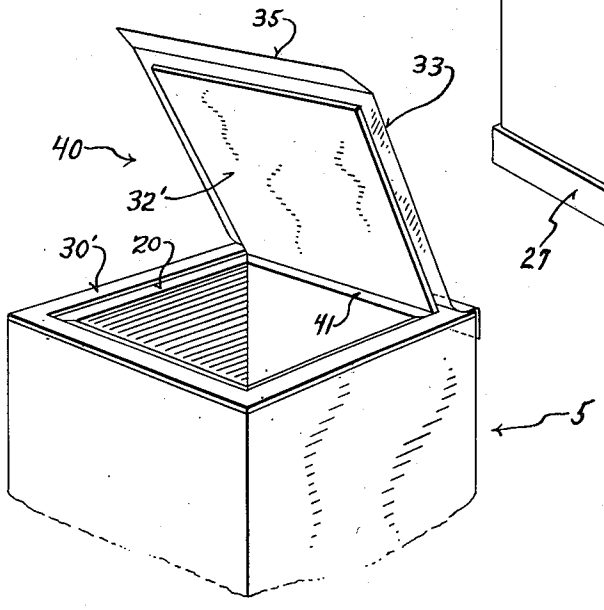


Inventor
Lewis C. Brooks
By Dr. Shilton Jones
Attorney

Dec. 4, 1951 L. C. BROOKS 2,577,304

CONTAINER

Filed April 11, 1946 2 SHEETS—SHEET 2

Fig. 2.

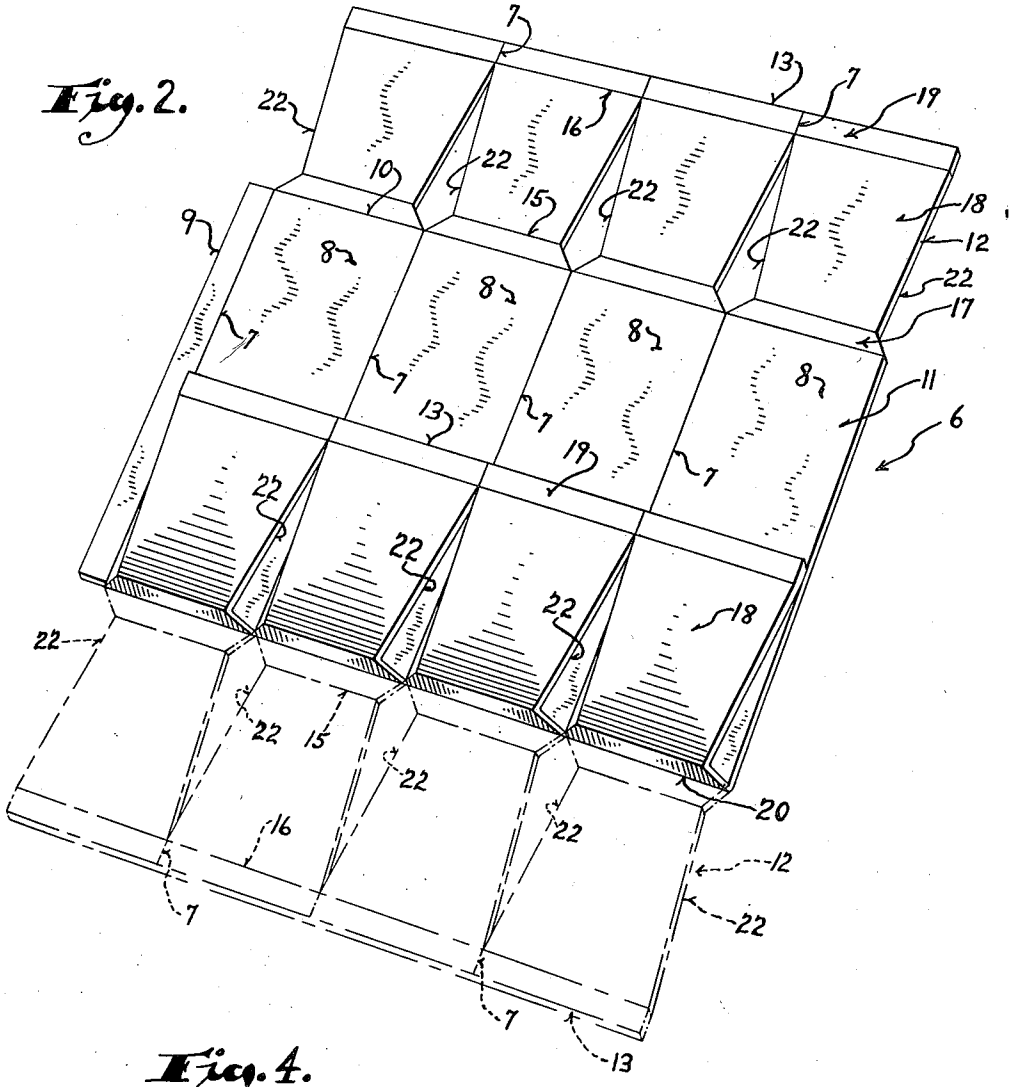


Fig. 4.

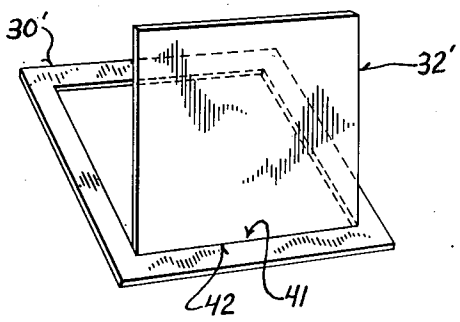


Inventor
Lewis C. Brooks
By Dewitt Jones
Attorney

Patented Dec. 4, 1951 2,577,304

# UNITED STATES PATENT OFFICE

2,577,304

## CONTAINER

Lewis C. Brooks, Milwaukee, Wis., assignor of one-third to Ira Milton Jones, Milwaukee, Wis.

Application April 11, 1946, Serial No. 661,308

9 Claims. (Cl. 229—5.5)

1

This invention relates to containers made of such materials as heavy paper, fiber, plastic, or thin sheet metal, and has particular reference to consumer containers of the type used for household commodities and foods. It is in part a division and in part a continuation of the co-pending application of Lewis C. Brooks, Serial No. 518,991, filed January 20, 1944, now Patent No. 2,398,405 issued April 16, 1946.

As fully brought out in said co-pending application, the containers with which this invention is concerned have a flat sided body generally of rectangular or square cross section and are formed in a manner facilitating attachment of end closure discs to produce a liquid tight and sift proof end seal. The end closure discs are supported on shoulders or ledges flush with the end wall of the container and substantially perpendicular to the side walls thereof.

One of the objects of this invention is to provide a container of the character described with shoulders or ledges at the opposite ends of the container to facilitate the application of closures thereto with said ledges formed as part of a reinforcing wall provided for the container in addition to its regular wall.

More specifically it is an object of this invention to provide a container of the character described with shoulders or ledges at its opposite ends for the support of end closures with said ledges formed by bending marginal extensions of the side walls inwardly of the container to provide an inner reinforcing and insulating wall for the container.

Another object of this invention resides in the provision of a novel end closure for cooperation with the ledges formed at least at one end of the container to seal said end of the container.

With the above and other objects in view, which will appear as the description proceeds, this invention resides in the novel construction, combination and arrangement of parts substantially as hereinafter described and more particularly defined by the appended claims, it being understood that such changes in the precise embodiment of the hereindisclosed invention may be made as come within the scope of the claims.

The accompanying drawings illustrate one complete example of the physical embodiment of the invention constructed according to the best mode so far devised for the practical application of the principles thereof, and in which:

Figure 1 is a perspective view of the container

2

of this invention with parts broken away and in section to show the double wall construction thereof;

Figure 2 is a perspective view of the blank from which the container is formed;

Figure 3 is a perspective view of the top portion of the container illustrating a modified end closure therefor; and

Figure 4 is a perspective view of a portion of the end closure of Figure 3 before its application to the container.

Referring now more particularly to the accompanying drawings in which like numerals indicate like parts the numeral 5 designates the body of a flatsided square paper or fiber container constructed in accordance with the aforesaid co-pending application, Serial No. 518,991, filed January 20, 1944.

The body of the container of this invention is formed from a single blank of paper of fiber board designated 6 and shown in Figure 2. Vertical score lines 7 divide the blank into four side wall forming panels 8 and a vertical glue flap 9 substantially equal in length to the height of the container and which is adapted to be adhered over the side of the adjacent panel when the blank is bent along the score lines 7 into square tubular shape. For reasons that will appear hereinafter it is preferable that the glue flap 9 be adhered over the exterior of its adjacent side wall to secure the blank in tubular form.

A pair of score lines 10 extending transversely across the blank in parallel spaced relationship divide the blank into a middle portion 11 providing all of the side walls of the container and opposite extensions 12 integral with the side wall forming portion 11 but each extending outwardly a distance at least equal to one-half the height of the container.

When these extensions 12 are folded back along the score lines 10 toward one side of the intermediate portion 11, the extreme marginal edges 13 of the extension substantially meet one another midway between the ends of the container while the bend lines 10 define the ends of the container itself.

Each of the extensions 12 is also provided with horizontal score lines 15 and 16 extending transversely across the blank parallel to the score lines 10 to divide the extensions into three adjacent transverse strips 17, 18 and 19. The score lines 15 are spaced from the score lines 10 a distance corresponding to the width of the shoulder or ledge 20 which it is desired to produce at the opposite ends of the container, for

it will be apparent that the strips 17 define the ledges when the extensions are folded back against the side wall forming portion 11 of the blank.

The score lines 16 are disposed close to the extreme marginal edges of the extensions as shown in Figure 2 so that the strips 19 are substantially narrow. When the extensions are bent back over the inner surfaces of the side walls as indicated in Figure 2 their extremities 19 provide unbroken anchor strips adapted for flatwise engagement with the side walls of the container to which they are permanently secured by any suitable adhesive. Bending is performed, however, in such a manner that the strips 17 provide the desired ledges 20 perpendicular to the side walls and flush with the ends of the body while the intermediate strips 18 extend substantially diagonally or at an inclination to the side walls and in spaced relationship thereto between the edges of the ledges remote from the bend lines 10 and the score lines 16.

After securement of the extensions in place in the manner indicated in Figure 2, the blank is next folded into tubular shape and secured by attachment of the strip 9 over the adjacent side wall, and it will be apparent that the intermediate portions 18 on the extensions provide in effect an inner wall for the container with the space between the inner and outer walls imparting heat insulating characteristics to the container as well as reinforcing the same.

In order to facilitate folding the blank into tubular form the strips 17 and 18 of the extensions have portions thereof on the score lines 7 cut away as at 22. This removes the excess stock from the inner reinforcing wall at the inner corners of the container and allows the opposing edges of the cut away portions to abut against one another in the formation of a smooth unlapped joint.

Although the edges of the slits 22 abut against one another, it will be appreciated that the interior of the container may be wax coated especially if it is to be used for packaging liquids or it may be provided with a liner of cellophane or plastic material as disclosed in the co-pending application of Lewis C. Brooks, Serial No. 463,099, filed October 23, 1942, now Patent No. 2,434,756, dated January 20, 1948. Such coatings or liners seal the interior of the container to prevent its contents leaking into the dead air space between the inner and outer walls of the container.

It will be readily appreciated also that the extensions 12 on the side walls of the container may be bent to overlie the exterior of the container to reinforce the same. In this case, the ledges or shoulders 20 at the opposite ends of the container project outwardly away from the container but have the same function as before.

In this latter case, coating the container with wax or lining the same with plastic or cellophane material would not necessarily be essential except for packaging liquids, and the anchor strips 19 obviously could not remain unbroken but would each have to be cut along the score lines 7 to produce four individual attaching strips.

Since no crowding of the extensions 13 is experienced when folding the same outwardly of the container, the openings 22 shown in Figure 2 may be dispensed with and mere slits provided in the extensions along the score lines 7 between the transverse score lines 10 and the outer marginal edges of the extensions.

As in the co-pending application of which this is in part a division and in part a continuation the shoulders or ledges 20 at the opposite ends of the container facilitate the application of end closures to the container.



The bottom closure 25 may be of any desired type inasmuch as it is adapted to be permanently secured against the shoulders 20 at the bottom of the container and preferably is formed as a closure disc 26 having side flanges 27 bent up therefrom to overlie the outer surfaces of the side walls to which they are permanently bonded in any suitable manner.

The top closure 28, however, may be of the type disclosed in the aforesaid copending application, Serial No. 518,991, inasmuch as it is desirable to have at least a portion of the top closure releasably adhered in place on the upper end of the container to facilitate dispensing of the container contents.

The closure 28 illustrated in Figure 1 comprises a disc 30 suitably permanently bonded or secured to the ledges or shoulders 20 at the top of the container. This disc has its central portion cut out to leave a hole 31 which is larger than the opening defined by the inner edges of the shoulders 20 so that when the disc 30 is in position the inner marginal portions of the shoulders are exposed to provide a seat for supporting an insert or cap 32 of a size to snuggly fit the opening 31.

An outer sealing sheet 33 is adhered to the under side of the insert or cap 32 and is squeezed between the adjacent edges of the cap and hole 31 when the cap is seated on the shoulders 20. The sealing sheet 33 is preferably formed of a material such as cellulose film, Pliofilm, Koroseal, Saran, Scotch tape, parchment or thin kraft paper.

One edge portion 34 of the outer sealing sheet is permanently adhered to the adjacent part of the disc and preferably also to the top portion of the adjacent side wall to provide a hinge along one edge of the container and its opposite marginal portion 35 is adapted to extend over the opposite side wall of the container and to be releasably adhered thereto to form a lifting flap for the closure.

The type of adhesive employed on the underside of the thin sealing sheet 33 is preferably one whose bonding characteristics increase with heat and pressure but which retains pressure sensitive characteristics after the initial seal established between the sheet and the shoulders 20 and the top of the disc 30 has once been broken. This feature enables the closure to be returned to a closed position sealing the partially dispensed contents of the container a number of times until the contents have been entirely dispensed.

The closure 40 illustrated in Figures 3 and 4 is slightly different from that previously described. In this case the sealing sheet 33 has the insert or cap 32' permanently secured to its under surface with the insert formed integrally with the disc 30' and hinged thereto.

The actual hinge 41 is formed by a score line 42 extending across the disc between two opposite side edges thereof as shown best in Figure 4. It is understood, of course, that the disc 30' is stamped or cut along three sides to define the free portion of the closure flap for a rectangular pouring opening and at such a location with respect to the marginal edges of the disc that the edge portions of the flap rest upon the ledges or shoulders 20 at the upper end of the container.

Obviously, the disc may be cut along two connected sides with the hinge extending substantially diagonally to the ends of the cuts to define a triangular pouring opening if desired.

With this closure, the ledges **20** or the underside of the hinged flap, or both have a coating of an adhesive such as that previously described which is capable of establishing a secure seal under the influence of heat and pressure at the time of packaging material in the container but which retains pressure sensitive characteristics after the seal has once been broken. Attention is also directed to the fact that both the insert and the sealing sheet cooperate to hold the closure **40** in place sealing the upper end of the container.

From the foregoing description taken in connection with the accompanying drawings, it will be readily apparent that this invention provides an especially strong container having insulating characteristics by reason of the double wall construction thereof and that the end closure of the container cooperates with the shoulders of the double walled container to effect a secure and desirable seal for releasably closing the container.

What I claim as my invention is:

1. A container of the character described, comprising: a body having flat side walls; closure supporting shoulders on the edges of the side walls integral with said side walls and perpendicular thereto; and diagonal supports for said shoulders integral therewith and extending in toward the middle of the container, the diagonal supports of the shoulders at opposite ends of the container meeting in abutting relationship and having their marginal edges adhered to the inner surfaces of the side walls so that the walls of the container have a dead air space substantially over their entire area.

2. In a container of the character described: a tubular body formed from a single blank of fiber board and having flat sides and angular corners; reinforcing means for the side walls formed by marginal extensions on the side walls integral with said blank and bent back on themselves to have their extreme marginal portions lying flat against and substantially meeting on the sides of the container, said extensions being so bent as to have a part intervening between said extreme marginal portions thereof and the line of the bend folded and formed into a closure supporting ledge extending around the ends of the container and substantially perpendicular to the side walls thereof; and means for adhering said extreme marginal portions of the extensions to the side walls of the container so as to rigidly support said ledges in perpendicular relationship to the side walls.

3. In a container of the character described: a tubular body formed from a single blank of fiber board and having flat sides and angular corners; integral extensions on the marginal edges of the side walls bent back on themselves into the opposite ends of the container with their extreme marginal portions forming one continuous unbroken anchor strip lying flat against the inner walls of the container and substantially meeting one another on their respective side walls, the portions of said extensions intervening between said extreme marginal portions thereof and the line of the bend at the opposite marginal edges of the side walls being folded and formed into a closure supporting ledge perpendicular to the side walls; and means for adhering said anchor strips to their respective side walls.



4. In a container of the character described: a tubular body formed from a single blank of fiber board and having flat sides and angular corners; and end closure supporting shoulders extending around the opposite ends of the body perpendicularly to the side walls and formed integrally therewith by marginal extensions on the side walls bent back on themselves to overlie one side of the container, said extensions having their extreme marginal portions lying flat against and substantially meeting on their respective side walls and adhered thereto so that the extensions reinforce the side walls and each of said extensions having a portion extending between its closure supporting shoulders and the extreme marginal portion thereof spaced from the side walls which they overlie to provide a dead air space therebetween.

5. A consumer type container made of flexible sheet material and having a tubular body formed of flat side walls provided with substantially flat end closures, characterized by: shoulders extending around the body at the opposite ends thereof flush with the ends of the body and perpendicular to the side walls thereof to provide ledges onto which the end closures may be adhered, said shoulders being formed by extensions integral with the side walls bent back upon themselves to overlie their respective side walls and having anchor strips at their extreme marginal ends adhered flatwise and in substantially meeting relationship on the side walls substantially midway between the ends of the body, and inclined portions integrally joining each of said ledges with their anchor strips and extending substantially diagonally from the edge of the ledge remote from the side walls to said anchor strips so as to support said ledges and reinforce the side walls of the container.

6. In a container having side walls defining a substantially tubular body: a closure supporting ledge carried by the side walls of the container in perpendicular relationship thereto and extending around one end of the body; and a closure for said end of the body comprising a disc resting on said ledge, said disc being cut along portions thereof overlying said ledge and scored to provide a hinged flap integral with the disc and movable from a position resting on the inner portions of said ledge and closing said end of the body to an open position at which the contents of the container may be dispensed; and means permanently bonding the portions of the disc surrounding the flap to the outer portions of the ledge.

7. In a container having side walls defining a tubular body: a closure supporting ledge extending around one end of the body perpendicular to said side walls; a closure for said end of the body comprising a disc of a size to rest on said ledge to close said end of the body, said disc being cut along lines inwardly of its marginal edges but overlying said ledge and so scored as to provide a hinged flap movable from a position resting on said ledge and closing the end of the body to an open position at which the contents of the container may be dispensed; a sealing sheet adhered to the top side of the flap and of a size to cover the entire disc when the flap is closed; a repeatedly effective pressure sensitive adhesive for releasably securing the sealing sheet onto the portions of the disc surrounding the flap; and means permanently bonding the portions of the disc surrounding the flap to said ledge so as to enable attachment of the closure to said end of the container.

8. In a container having side walls defining a tubular body of substantially rectangular cross section: a closure supporting ledge extending around one end of the body with its outer surface flush therewith and perpendicular to the side walls of the body; an end closure for said end of the body comprising a substantially rectangular disc permanently adhered flatwise onto the outer portions of said ledge, said disc being cut along three sides thereof inwardly of its marginal edges along lines substantially parallel to the side walls of the container but overlying said ledge and having a score line inwardly of and substantially parallel to the fourth side of the disc so as to define a flap hinged on said score line and movable on its hinge axis from a closed position with marginal portions of the flap overlying and resting on said ledge to an open position uncovering the end of the body, a sealing sheet permanently adhered to the top side of the flap and of a size to completely cover the disc when the flap is closed, and means for releasably adhering the portions of the sealing sheet projecting outwardly of said hinged flap onto the marginal portions of the disc surrounding the flap.

9. In a consumer type container having a flat sided tubular body made by folding a single blank on appropriate score lines: end closure supporting ledges projecting inwardly from the sides of the container flush with its ends and extending thereabout, said ledges being formed by integral extensions on the marginal edges of the side walls of a length at least equal to one-half the height of the body and having score lines extending thereacross transversely to the score lines defining the side walls of the body to produce ledge defining strips connected with the marginal edges of the side walls and anchor strips at the extremities of the extensions adapted to substantially meet one another when the extensions are folded back on said ledge defining score lines toward the sides of the container; at least one of the inner strips of each extension being cut away adjacent to the corners of the body to facilitate folding said ledges around the inner corners of the body; and means for securing said anchor strips at the extreme marginal end portions of the extensions flatwise against their respective side walls with the anchor strips substantially meeting each other.



LEWIS C. BROOKS.


## REFERENCES CITED

The following references are of record in the file of this patent:

UNITED STATES PATENTS

| Number | Name | Date |
|---|---|---|
| 2,165,327 | Zalkind | July 11, 1939 |
| 2,173,871 | Zalkind | Sept. 26, 1939 |
| 2,317,651 | Talbot | Apr. 27, 1943 |
| 2,350,214 | Braloff | May 30, 1944 |
| 2,360,117 | Fellowes | Oct. 10, 1944 |
| 2,369,387 | Williamson et al. | Feb. 13, 1945 |
| 2,398,405 | Brooks | Apr. 16, 1946 |
| 2,450,110 | Brooks | Sept. 28, 1948 |