Dec. 31, 1968 H. H. STRAUB 3,419,029

BREATHING VALVE ASSEMBLY

Filed Jan. 27, 1967 Sheet 1 of 2

Fig-7

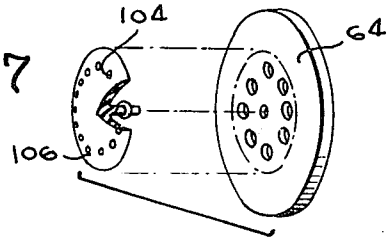

Fig-3

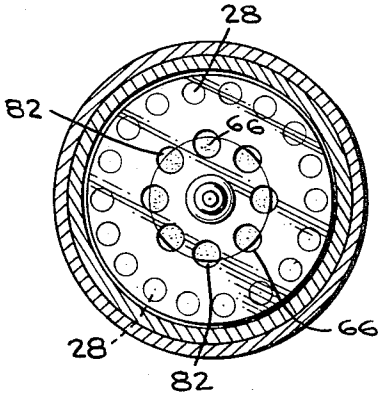

Fig-2

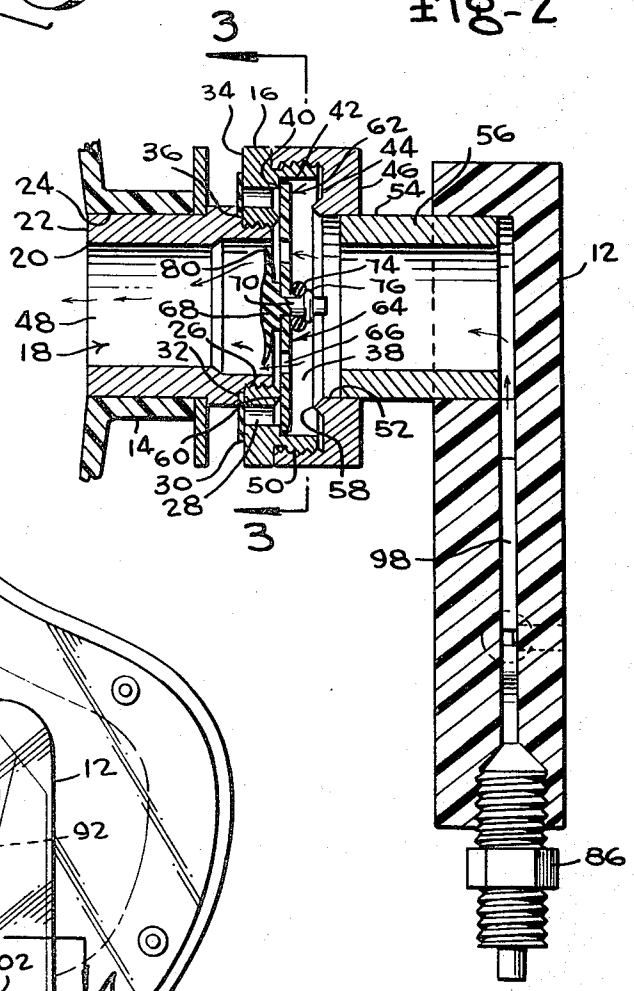

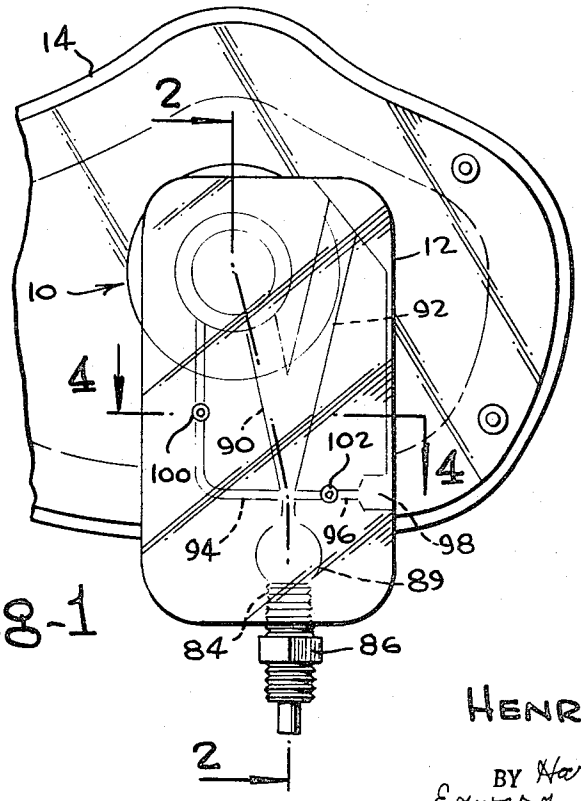

Fig-1

INVENTOR

HENRIK H. STRAUB

BY Harry M. Saragovitz, Edward J. Kelly, Herbert Berl & J. D. Edgerton

ATTORNEYS

BREATHING VALVE ASSEMBLY

Filed Jan. 27, 1967

Fig-6

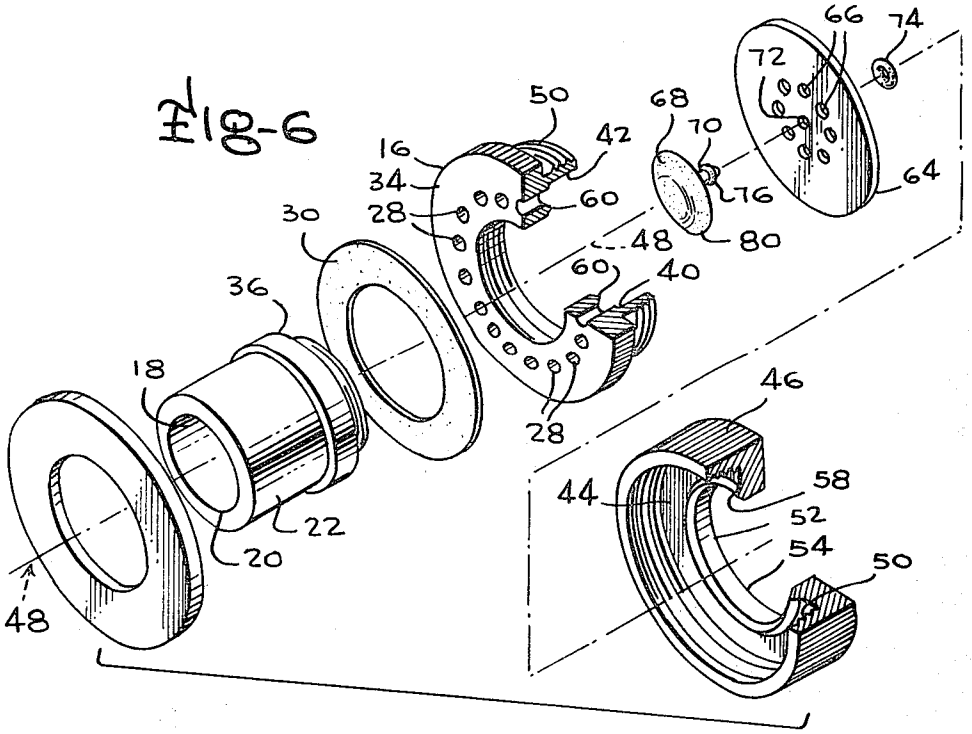

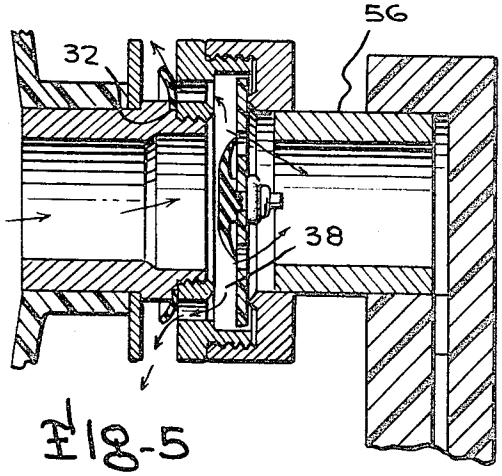

Fig-5

Fig-4

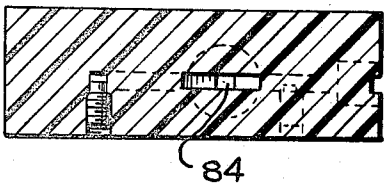

INVENTOR

HENRIK H. STRAUB

BY Harry M. Saragovitz, Edward J. Kelly, Herbert Berl & J. D. Edgerton

ATTORNEYS

United States Patent Office

3,419,029

Patented Dec. 31, 1968

1

3,419,029
BREATHING VALVE ASSEMBLY

Henrik H. Straub, Mercer Island, Wash., assignor to the United States of America as represented by the Secretary of the Army

Filed Jan. 27, 1967, Ser. No. 612,768
12 Claims. (Cl. 137—81.5)

ABSTRACT OF THE DISCLOSURE

A breathing valve assembly for use between a face mask and a fluid amplifier connected to a respirator which minimizes the expiration resistance, but provides a flow of expiration fluid to the fluid amplifier to prevent premature switching of the breathing into the mask until the completion of the expiration cycle.

The invention described herein may be used by or for the Government of the United States for governmental purposes without the payment to me of any royalty thereon.

This invention relates generally to a breathing valve. More particularly, the present invention relates to a breathing valve for use with a fluid amplifier which controls and directs the flow of breathing fluid from a respirator or other source of the breathing fluid to a face mask worn by a patient.

It is a very important feature in any respiratory apparatus to minimize the resistance to fluid flow, particularly in view of the fact that the wearer may be having difficulty breathing, and any added resistance, due to the respirator, may cause serious complications.

In a pressure sensitive fluid amplifier developed jointly by Mr. H. H. Straub, Harry Diamond Laboratories, Washington, D.C., and Dr. E. Mosley, Walter Reed Army Institute of Research, Washington, D.C., for use between a respirator and a face mask, the flow direction of the main stream from the respirator to the face mask is controlled by two opposed control ports, one on either side of the main stream. These control ports operate to direct the main stream of breathing fluid, either to the mask or through the exhaust to the atmosphere. To determine the direction of such flow, these control ports are sensitive to the pressures to which they are subjected, one control port being in communication with the pressure in the face mask and the other control port being in communication with the atmosphere. By the magnitude of these pressures, switching the flow between the face mask and the atmosphere may be accomplished. The switching of the flow occurs by reason of the fact that the main stream of fluid from the respirator attaches to one receiver or passageway wall to the face mask or to the other receiver or passageway wall flowing to the atmosphere, depending upon which control port is at a higher pressure.

It has been found that while the amplifier is a valuable addition to a respirator apparatus, it is important that the proper pressure be maintained in the fluid amplifier during expiration, in order that the stream of breathing fluid is not switched prematurely from the receiver in communication with the atmospheric exhaust port back to flow into the face mask. Ideally the switching of the breathing fluid from exhaust into the face mask should occur only at the commencement of the inspiration cycle, or, in other words, at the end of the expiration cycle. In order to prevent the premature switching, it is necessary that all during the expiration cycle the pressure be maintained at a higher level in the control port for the receiver in communication with the face mask, than in the control port for the exhaust receiver. In the past, to maintain

2

this unbalanced pressure normally resulted in a greater resistance to the expiration flow and prevented a full realization of the potential of the fluid amplifier and the respirator.

Accordingly, it is the primary object of the present invention to diminish the excessive respiratory resistance in the fluid amplifier pressure cycle control respirator.

Another important object of this invention is to maintain the respiratory resistance as low as possible, yet retain the pressure in the fluid amplifier sufficiently high to prevent premature switching of the flow to the face mask during exhalation.

This invention also has as an object the provision of a breathing valve which has a dual path for the expiration fluid.

This invention also has as an object the provision of a breathing valve in which the major portion of the expiration fluid is exhausted rapidly through a primary exhalation outlet and a portion of the expiration fluid is passed through the valve into the fluid amplifier connected between the breathing valve and a respirator, in order to prevent premature switching of the flow of the breathing fluid during the expiration cycle from the exhaust receiver to the face mask receiver.

Other objects and advantages of the present invention become apparent to those skilled in the art from the following description when read in conjunction with the accompanying drawing, wherein:

FIGURE 1 is a plan view partly broken away of the breathing valve of the present invention, positioned between a fluid amplifier and the face mask.

FIGURE 2 is a cross sectional view taken along lines 2—2 of FIGURE 1 and partly broken away, illustrating the details of the breathing valve and its fluid communication with the fluid amplifier and face mask.

FIGURE 3 is a cross sectional view taken along lines 3—3 of FIGURE 2 and illustrating the valve means and the fluid control means.

FIGURE 4 is a cross sectional view taken along lines 4—4 of FIGURE 1, illustrating the fluid amplifier.

FIGURE 5 is a cross sectional view similar to FIGURE 2 and further broken away, illustrating the fluid control means and valve means in the expiration cycle.

FIGURE 6 is an exploded perspective view, partly in section, of the breathing valve of the present invention.

FIGURE 7 is a perspective view of the fluid control means forming another embodiment of the present invention.

The present invention primarily includes a breathing valve assembly for use between a face mask and a fluid amplifier connected to a respirator which minimizes the expiration resistance, but provides a flow of expiration fluid to the fluid amplifier to prevent premature switching of the breathing into the mask until the completion of the spiration cycle. The breathing valve of this invention includes the use of a valve means floating within a chamber in the bore of the breathing valve for control of the fluid flow through the primary exhalation outlet. During expiration the breathing valve assembly permits the exhausting of the major portion of the expiration fluid through the primary exahalation outlet and through the provision of a fluid control means positioned on the valve means a constant flow of expiration fluid during the expiratory cycle is permitted to flow through ports in the valve means and into the fluid amplifier to retain the necessary fluid pressure in the control ports during exhalation. These ports are partially covered during expiration by the fluid control means to permit this continuous flow, but are completely uncovered during inhalation so as not to restrict inspiration.

In the drawings, FIGURES 1 and 2 disclose the breathing valve assembly **10** positioned between the fluid ampli-

fier 12 and the conventional face mask 14. As best shown in FIGURES 2, 5 and 6, the breathing valve of the present invention may be composed of any light, durable material, such as aluminum or a plastic, and includes a body 16 having a patient passageway 18 for inhalation and exhalation, including opening 20, both formed in an extension tube 22, designed to be received in a suitable receptacle 24 in the face mask 14. The tube 22 is formed integrally, or otherwise suitably connected, as by threads 26, to the body 16. As best shown in FIGURE 6 and in FIGURE 3, the body 16 is provided with a plurality of outlets 28, which may be uniformly distributed radially about the circumference of the body 16. The position, the size, and the number of these outlets is not critical to the present invention, it being important only that they provide sufficient area for exhalation and will act as the primary exhalation outlets.

Protecting the primary exhalation outlets 28 is a thin, flexible ring 30, forming a valve means for the primary exhalation outlets 28. This flexible ring 30 may be made of rubber or other suitable material and is positioned within a circumferential groove 32 formed on the outside of the tube 22 and is held in place between the back face 34 of the body 16 and the confronting face 36 of the tube, which in part form groove 32. As can be seen in FIGURES 2 and 5, the radial extent of the flexible ring 30 is suffifficient to cover completely the primary exhalation outlets 28. The primary exhalation outlets 28 communicate with a chamber 38 formed between the interior peripheral edge 40 of the body 16, the outer peripheral wall 42, and the interior face 44 of the cap 46. As shown, this chamber has a radial extent greater than the diameter of the axial bore 48, which is formed through the breathing valve assembly and is axially aligned and in fluid communication with the chamber 38. The cap 46 is secured to the body by any convenient means, such as the threads 50. Centrally positioned in the cap 46 and axially aligned with the chamber 38 is a respirator passageway 52 coincident with the bore 48 and forming a respirator outlet 54 for connection with the fluid amplifier tube 56, which has an outlet diameter such that a force fit is obtained between the fluid amplifier tube 56 and the respirator passageway 52 in the cap 46.

The chamber formed between the cap 46 and the body 16 is provided with radially disposed and confronting abutting means 58 and 60, respectively. As shown best in FIGURES 2 and 5, the face 40 and the abutting means 60 are coplanar.

Disposed within the bore 48 and in particular within the chamber 38 is the primary valve means 62, which includes a thin floating disk 64, which may be made of any light material, such as Teflon or other plastic, or any other material which is light enough to oscillate, due to the fluid flow, in the chamber 38. This disk 64 is preferably axially aligned with bore 48. Radially disposed about and through the floating disk are a plurality of ports 66, which, as best shown in FIGURES 3, 5, and 6, may be uniformly distributed from the axial center of the disk 64. The number, location and size of these ports 66 is not critical, except that they should be of ample size to permit easy inspiration by the patient.

Positioned within the disk 64 is a fluid control means 68, which is in the form of a flap valve having a stem 70, received within the central opening 72 and secured there by an O-ring 74, held in place by an enlargement 76 on the end of the stem 70.

The fluid control means 68 in the form of the flap valve is an important aspect of the present invention, in that it is formed so as to have a radial extent, shown at 78 in FIGURE 3, such that the peripheral edge 80 of the flap valve only partially covers the ports 66, as best shown in FIGURE 3. The spacing between the peripheral edge 80 of the fluid control means 68 and the radially outermost edge of the plurality of ports 66 provides a gap or spacing 82 which, when, as best shown in FIGURE 5, the flap valve 80 is closed during expiration, will still permit the flow of a portion of the exhalation fluid through the spacing 82 and through the ports 66, and therefore beyond the valve means 62 into the fluid respirator passageway 52, and therefore into the fluid amplifier tube 56.

The valve means 64, being light, will move in the direction of the fluid flow to strike the abutment means 58 upon expiration of the patient and will uncover primary expiration outlets 38, as shown in FIGURE 5. Upon expiration of the fluid under pressure entering the primary exhalation outlets 28, the flexible ring 30 opens to exhaust the major portion of the exhalation fluid to the atmosphere. Therefore, it can be seen that there is little resisance to flow of the exhalation fluid through the breathing valve assembly, since the exhalation fluid passes from the patient exhalation passageway 18 directly into chamber 38 and exhausts directly to the atmosphere through the primary exhalation outlets 38. At the same time, during the exhalation cycle, fluid control means 68, in the form of the flap valve, will take the position shown in FIGURE 5 to permit a constant flow of exhalation fluid through the spacing 82 and into the respirator passageway 52 to the fluid amplifier 56.

The importance of this continuous flow of exhalation fluid into the fluid amplifier 12 can be understood more fully from a description of the construction and operation of the fluid amplifier.

The fluid amplifier 12 may be made from any rigid plasic or other strong durable material and is provided with an inlet 84 into which is provided a nipple 86 that is connected to a source of breathing fluid, such as oxygen or air. A power nozzle 88 is provided within the fluid amplifier 12 and is in the form of a chamber into which the breathing fluid under pressure is directed. From the power nozzle 88 the main stream of fluid is directed, either to the left receiver 90 or the right reciver 92, which are passageways through the fluid amplifier to the face mask and atmosphere, respectively. Flow direction is controlled by two control ports 94 and 96 on either side of the main stream. Port 96 opens to the atmosphere at 98, while control port 94 is in fluid communication with the interior of the face mask, as best shown in FIGURE 2. Regulating screws 100 and 102 are positioned within the control ports for the left and right receivers, respectively. When the breathing fluid is directed through the power nozzle 88, uneven gas entrainment from the two control ports causes the flow of the main stream to attach itself to one receiver wall and proceed through that receiver. For instance, when the flow attaches to the left receiver 90, which is the face mask receiver, deep breathing fluid is forced into the face mask and the lungs of the patient. As the pressure builds up in the lungs of the patient, the face mask pressure also increases, causing the flow through the control port 94 and at a predetermined pressure the entrainment of the main stream to the receiver 90 is satisfied and the main stream is then switched to the right receiver 92 to exhaust to the atmosphere, thus allowing the patient to exhale. The pressure in control port 94, upon exhalation, decreases without the breathing valve of the present invention to a pressure below atmospheric, causing a switching of the main stream back into the face mask. With the use of the breathing valve 10 during exhalation, a minor part of the expiration fluid passes through the spacing or gap 82 between the flap valve or fluid control means 68 to insure that the pressure in the control port 94 does not decrease to atmospheric pressure or below too rapidly. In this manner the patient may continue to exhale. One of the important features of this invention is that during the exhalation the main stream of breathing fluid is exhausted through the atmospheric port, or right receiver 92, and the suction created in the left receiver 90 of the fluid amplifier draws additional air from the lungs of the patient through the spacing 82, thus lowering the pressure in the breathing valve 10 and more importantly, in

the patient's lungs to below the atmosphere. When a desired negative pressure occurs in the fluid amplifier, the main stream of fluid is switched from exhaust through right receiver 92 into the left receiver 90 and into the face mask and patient's lungs.

In another embodiment of the present invention, FIGURE 7 discloses the fluid control means 68 in the form of a flap valve having holes 104 in a flap valve 106, which is of a diameter such that it may completely cover the port 66 in the disk 64. The operation of the modified flap valve 106 is precisely the same as that previously described, the ports 104 serving the same purpose as the spacing 82, in order to allow, during expiration, a portion of the fluid to pass through the fluid control means and through ports 66 in the disk valve 64 to prevent premature switching of the main stream of breathing fluid in the fluid amplifier.

From the foregoing detailed description, it will be evident that there are a number of changes, adaptations, and modifications of the present invention which come within the province of those skilled in the art. However, it is intended that all such variations not departing from the spirit of the invention, be considered as within the scope thereof as limited solely by the appended claims.

I claim:

1. A breathing valve assembly for respirator comprising:

a bore within said assembly,

a patient passageway and a respirator passageway in mutually controlled fluid communication through said bore,

an opening at one end of said patient passageway adapted to be in fluid communication with a patient,

an inlet at one end of said respirator passageway adapted to be in fluid communication with a respirator,

a primary exhalation outlet from said assembly positioned within said assembly in fluid communication with said inhalation and exhalation opening,

valve means positioned within said assembly and operably associated with said primary exhalation outlet to open said outlet upon exhalation and upon inhalation to close said outlet,

said valve means having ports therein in fluid communication with said bore,

fluid control means operably associated with said ports to control the flow of fluid through said ports, whereby upon exhalation a portion of exhalation fluid exits through said ports and another portion exits through said primary exhalation outlet.

2. The breathing valve of claim 1, including a second valve means positioned on said assembly and operable to open and close said primary exhalation outlet upon exhalation and inhalation, respectively.

3. The breathing valve of claim 1, wherein said fluid control means is a flap valve partially blocking said ports during exhalation, whereby a portion of said exhalation fluid exits in the direction of said expirator.

4. The breathing valve of claim 1, wherein said valve means floats within said bore and carries said fluid control means thereon.

5. The breathing valve of claim 4, wherein said valve means is a disk of a radial extent sufficient to block at a first seating position said primary exhalation outlet upon inhalation and to open at a second seating position said primary exhalation outlet.

6. The breathing valve of claim 1, including a chamber having axial extension along said bore between said passageways, said valve means being in floating position within said chamber.

7. The breathing valve of claim 1, including said fluid control means being a flap valve, holes in said flap valve providing a path of constant fluid communication with said ports to insure a portion of said exhalation fluid passing through said respirator passageway.

8. The breathing valve of claim 1, including a chamber having axial extension along said bore between said passageways, said valve means being in floating position within said chamber, said fluid control means being a flap valve, holes in said flap valve providing a path of constant fluid communication with said ports to insure a portion of said exhalation fluid passing through said respirator passageway.

9. The breathing valve of claim 1, wherein said valve means floats within said bore and carries said fluid control means thereon and said fluid control means is a flap valve partially blocking said ports during exhalation, whereby a portion of said exhalation fluid exits in the direction of said expirator.

10. The breathing valve of claim 1, wherein said primary exhalation outlet is formed by a plurality of exhaust ports radially disposed around said bore.

11. The breathing valve of claim 10, including a second valve means formed in a flexible ring position on the outside of said primary exhalation outlet.

12. The breathing valve of claim 1, in combination with a respirator and a fluid amplifier connected therebetween.

References Cited

UNITED STATES PATENTS

3,280,832	11/1963	Burns	137—512.2
3,356,100	12/1967	Seeler	137—102

M. CARY NELSON, *Primary Examiner.*

J. R. DWELLE, *Assistant Examiner.*

U.S. Cl. X.R.

137—102