Aug. 18, 1936. C. MANCE 2,051,563

AUTOMOBILE MECHANIC'S CREEPER

Filed April 15, 1936 2 Sheets-Sheet 1

Fig. 1.

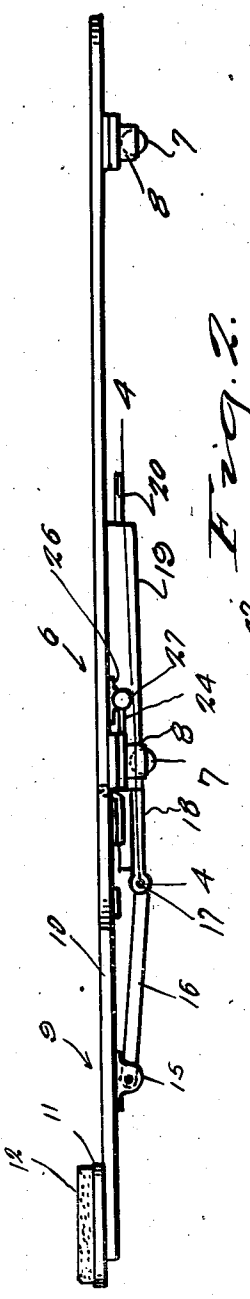

Fig. 2.

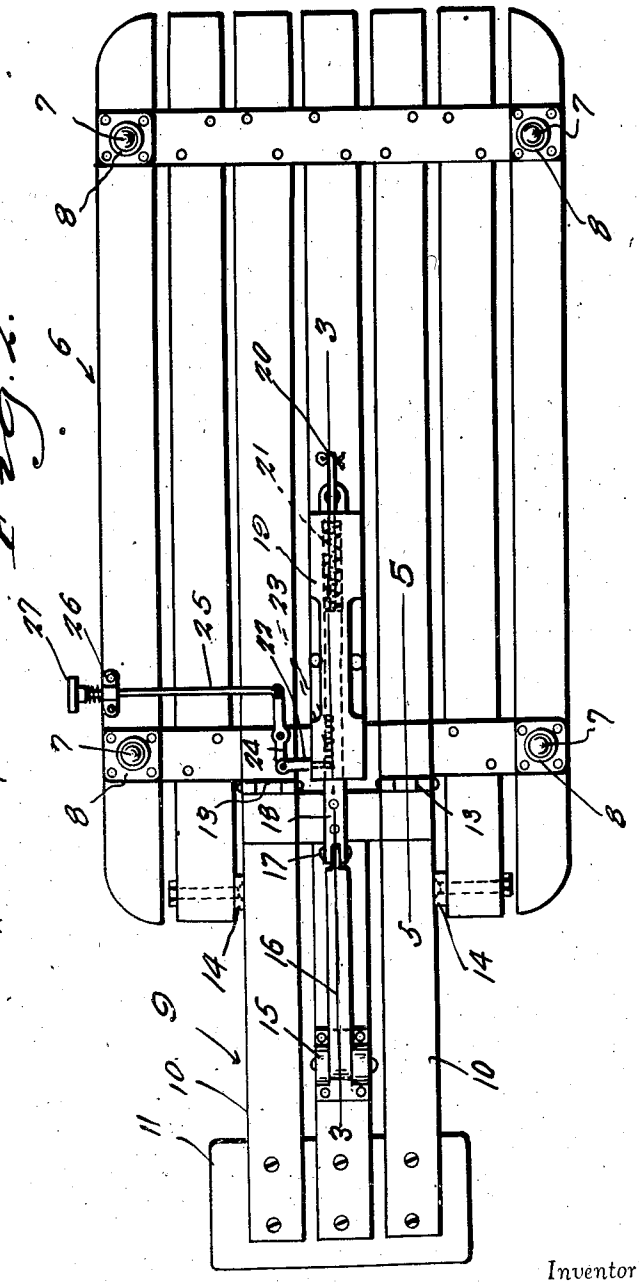

Inventor

Charles Mance

By Clarence A. O'Brien and Hyman Berman Attorneys

Aug. 18, 1936. C. MANCE 2,051,563

AUTOMOBILE MECHANIC'S CREEPER

Filed April 15, 1936 2 Sheets-Sheet 2

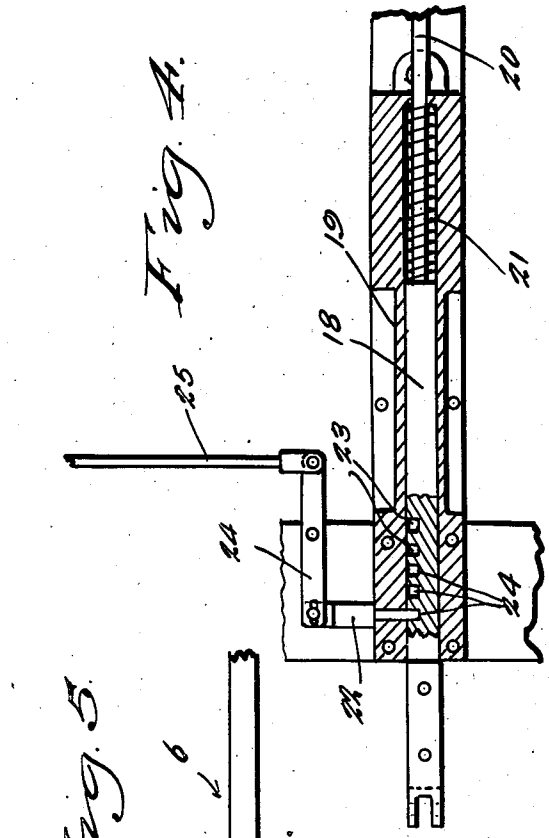

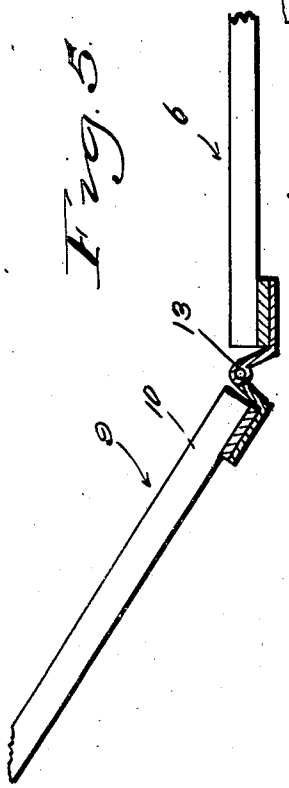

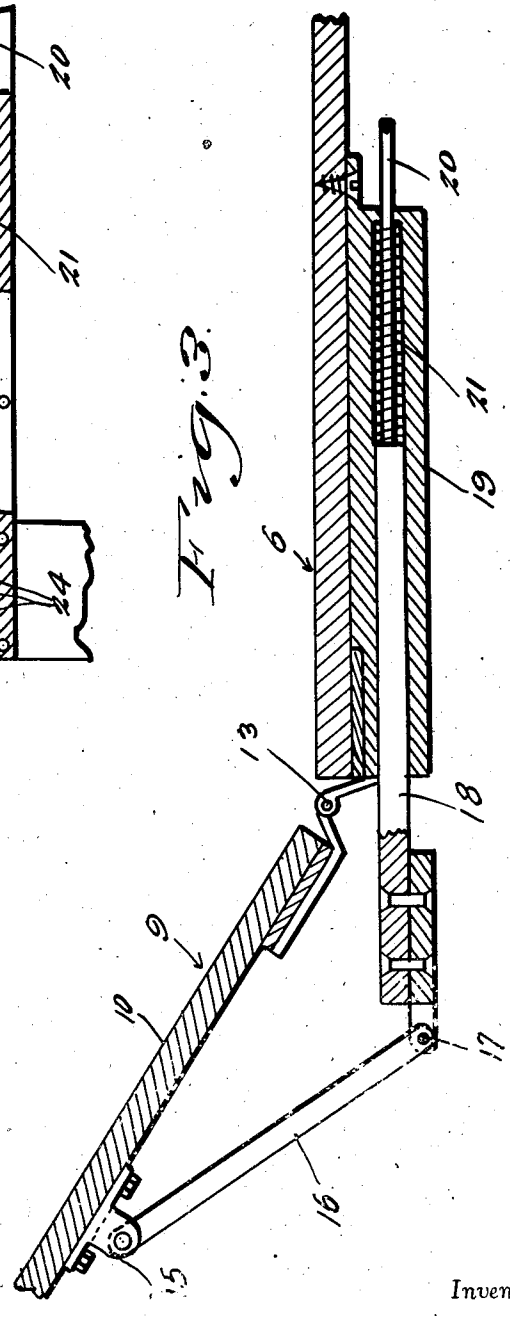

Inventor

Charles Mance

By Clarence O'Brien and Hyman Berman Attorneys

Patented Aug. 18, 1936

2,051,563

UNITED STATES PATENT OFFICE

2,051,563

AUTOMOBILE MECHANIC'S CREEPER

Charles Mance, Steubenville, Ohio

Application April 15, 1936, Serial No. 74,554

3 Claims. (Cl. 280—61.5)

Stating the nature of the case generally, and as is evident, from a general inspection of the drawings, the invention relates to that category of structures grouped under the classification of garage creepers, and has reference in particular to a novel conception characterized by an improved adjustable head rest.

By way of contrast with a prior art devices, of which there are numerous different styles and types, it is thought that the present device embodies a specifically new idea of structural means and attributes aptly fitted to satisfactorily accomplish the improved purposes and results calculated to permit greater efficiency while promoting comfort to the user.

It is evident, as above asserted, that it is my primary aim and purpose to generally improve upon known prior patented and marketed mechanic's creepers by providing one which is more compact and convenient and capable of performing new functions appropriate to the needs of the otherwise handicapped user.

Another object is to provide an observedly different head rest construction possessed of progressive refinements and practical improvements such as may be endorsed as proportionately more satisfactory in controlling the head rest and definitely regulating the angularity to a comparatively wide range while the creeper is occupied and without necessitating dismounting.

Other features and advantages will become more readily apparent from the following description and the accompanying drawings.

In the drawings, wherein like numerals are employed to designate corresponding mechanical details of the parts throughout the views:

Figure 1 is an edge elevational view of a garage-type mechanic's creeper embodying a head rest and associated details constructed in accordance with the principles of the present invention;

Figure 2 is a bottom plan view of Figure 1;

Figure 3 is a longitudinal section, on an enlarged scale, taken approximately on the plane of the line 3—3 of Figure 2;

Figures 4 and 5 are similar sectional views taken on the planes of the lines 4—4 and 5—5, respectively, of Figures 1 and 2, respectively.

Referring now to the drawings by distinguishing numerals, it will be observed that the truck or creeper proper is indicated as a unit by the numeral 6. This is of suitable slatted construction and provided with appropriate rollers 7 carried by suitable depending legs or brackets 8. This permits the desired swiveling and universal movement of the creeper.

Projecting centrally beyond one end, as shown to advantage in Figures 1 and 2, is that unit 9 which constitutes the adjustable head rest. This is made up of slats 10 having a head board 11 provided with a suitable cushion or pad 12. This unit is hingedly connected to the adjacent frontal portion of the creeper or truck, as indicated at the point 13. Incidentally, the numerals 14 designate guide cleats to facilitate proper swinging or tilting of the head rest and to promote rigidity and stability.

The numeral 15 designates an appropriate bracket to which a link 16 is pivotally connected. The link is also pivotally connected at its opposite end as indicated at 17 to a reciprocatory plunger or rod 18 mounted for reciprocation in a cylinder 19 rigidly fastened to the central portion of the bottom of the creeper 6. Surrounding the restricted end portion 20 of the plunger and confined in the socket is an expansion coiled spring 21 normally exerting pressure on the parts 18 and 16 to exert an upward lift on the head rest, whereby it is normally held up in an inclined position. Incidentally, the head rest swings from a horizontal position, as shown in Figure 1, to an inclined position which is somewhat at an obtuse angle. In the latter position the head rest has a clearance of about 10 inches from the floor, and is generally considered to be satisfactory for the purposes intended.

Attention is called now to a projectable and retractible latch pin 22 which, as shown in Figures 2 and 4, is projectable into one of the keeper sockets 23 formed in the plunger rod. This is actuated through the instrumentality of a rocker arm 24 pivoted on the truck and in turn actuated through the instrumentality of a spring-pressed push-rod 25. The push-rod is suitably mounted in a guide bracket 26 on the marginal portion of the truck and is provided with a thumb button 27. The latch can, through the instrumentality of this arrangement, be selectively engaged with one of the keeper seats to lock plunger in the desired position to regulate the tilt or inclination of the head rest 9.

The gist of the invention is therefore found in the provision of a portable truck or creeper of more or less conventional design having a pivoted, hingedly mounted head rest at one end, wherein the head rest is swingable from a low or horizontal position to an upwardly inclined head-supporting position. In particular, the especial newness in the arrangement is in the plunger and link and bracket arrangement whereby spring means is used so as to automatically

lift and hold the head rest in an upwardly inclined position. Further novelty is attached to the arrangement whereby the head can be pressed down against the head rest to adjust it to the desired angle, after which the latch can be engaged with the plunger, as described, to hold the head rest in this predetermined or set position. The automatic spring means for the latch, as well as the automatic spring means for raising the head rest constitute the aforementioned progressive refinements and practical improvements which proportionately add to the individuality of the structure as a whole and render it appropriate for the purposes intended.

It is thought that the description taken in connection with the drawings will enable a clear understanding of the invention to be had. Therefore, a more lengthy description is thought unnecessary.

While the preferred embodiment of the invention has been shown and described, it is to be understood that minor changes coming within the field of invention claimed may be resorted to if desired.

I claim:

1. In a structure of the class described, a creeper, a head rest pivotally attached to one end of the creeper, a spring-pressed rod slidably mounted on the creeper, a link pivotally connecting the head rest and rod and a latch device engaging the rod for securing the head rest in adjusted position.

2. In a structure of the class described, a creeper, a head rest pivotally attached to one end of the creeper, a spring-pressed rod slidably mounted on the creeper, a link pivotally connected with the head rest and rod, a pivoted spring-pressed latch cooperable with said rod and mounted on said creeper, and a push button connected with the latch and arranged on the marginal portion of the creeper to render it readily accessible to the occupant of the truck.

3. In a structure of the class described, a creeper, a cylinder fixedly mounted on the creeper, a spring-pressed rod slidably mounted in said cylinder, a head rest hingedly attached to one end of the creeper, a link connection between the rod and the head rest, a rocker arm pivotally mounted on the creeper within the vicinity of the cylinder, said rod being provided with keeper seats, a latch carried by said rocker arm and selectively engageable with the keeper seats, and a slidable push rod and button attached to said rocker arm and located on the marginal portion of the creeper for convenient operation.

CHARLES MANCE.