US 20240349801A1

(19) United States

(12) Patent Application Publication (10) Pub. No.: US 2024/0349801 A1

Monticone et al. (43) Pub. Date: Oct. 24, 2024

(54) **AEROSOL-GENERATING DEVICE AND METHOD OF INDICATING AN OPERATIONAL STATE OF AN AEROSOL-GENERATING DEVICE**

(71) Applicant: **JT International S.A.**, Geneva (CH)

(72) Inventors: **Pier Paolo Monticone**, Le Grand-Saconnex (CH); **Layth Sliman Bouchuiguir**, Bellevue (CH)

(73) Assignee: **JT International S.A.**, Geneva (CH)

(21) Appl. No.: **18/291,022**

(22) PCT Filed: **Jul. 19, 2022**

(86) PCT No.: **PCT/EP2022/070198**

§ 371 (c)(1),
(2) Date: **Jan. 22, 2024**

(30) **Foreign Application Priority Data**

Jul. 22, 2021 (EP) 21187162.9

Publication Classification

(51) **Int. Cl.**
A24F 40/46 (2006.01)
A24F 40/50 (2006.01)

(52) **U.S. Cl.**
CPC ***A24F 40/46*** (2020.01); ***A24F 40/50*** (2020.01)

(57) **ABSTRACT**

An aerosol-generating device has thermochromic material visible from outside the device and extending in a longitudinal direction and a heat transfer structure inside the device relative to the thermochromic material and essentially extending in the same longitudinal direction as the thermochromic material and at least overlapping with it, wherein a thermal resistance of the heat transfer structure increases in the longitudinal direction. Further, a method of indicating at least one operational state of an aerosol-generating device by changing colour of thermochromic material visible from outside is presented, wherein at least two portions of thermochromic material are heated successively due to a thermal resistance of a heat transfer structure inside the device relative to the thermochromic material increasing in a longitudinal direction of the thermochromic material and the heat transfer structure.

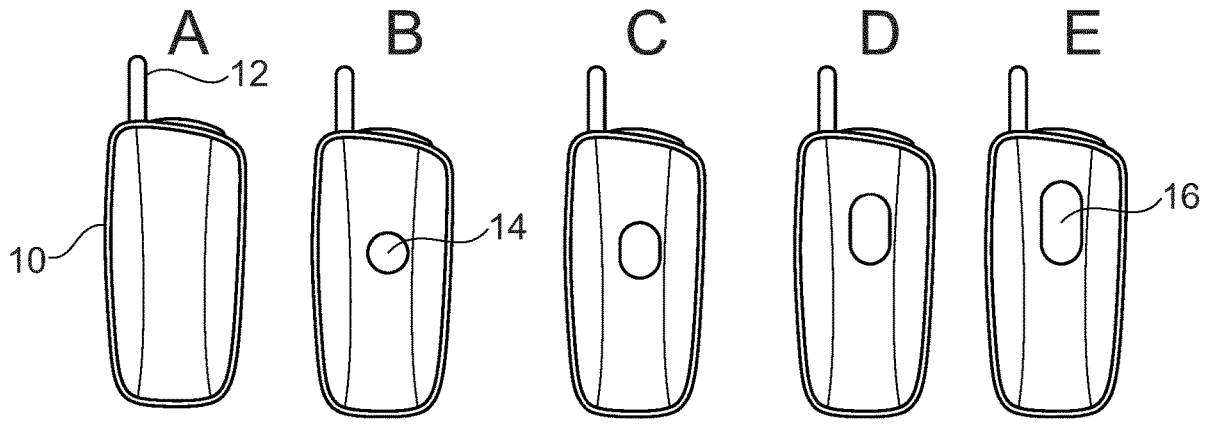

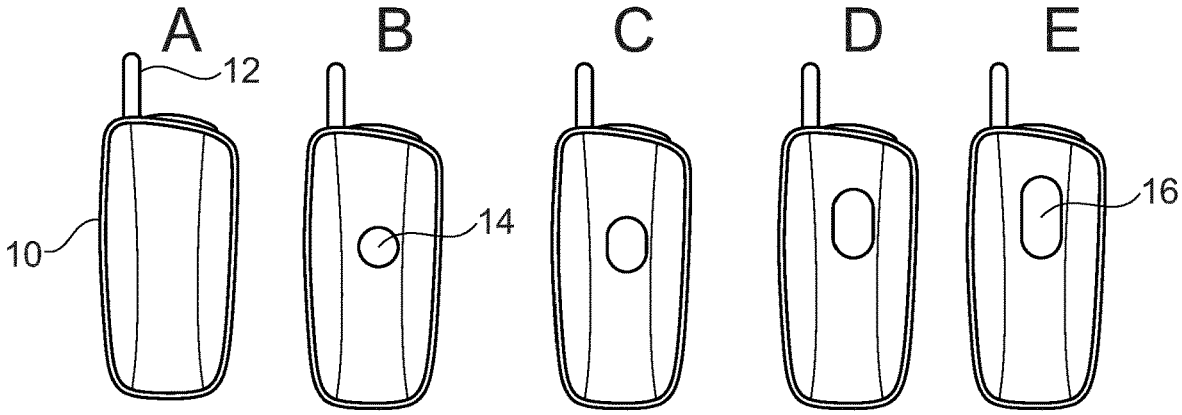

Fig. 1

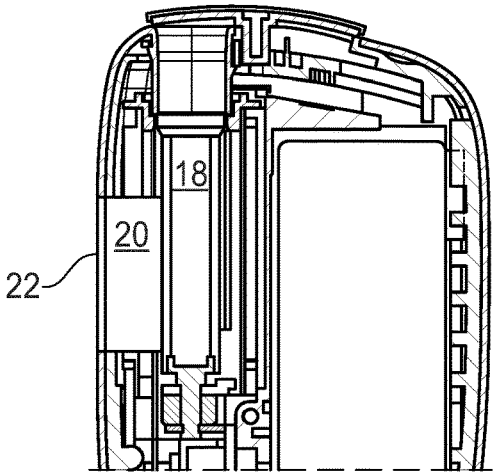

Fig. 2

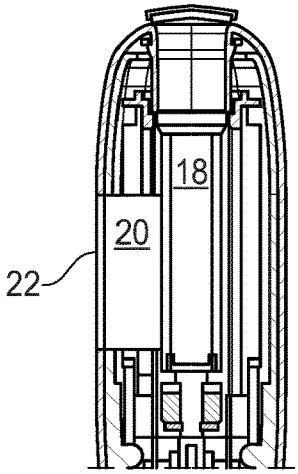

Fig. 3

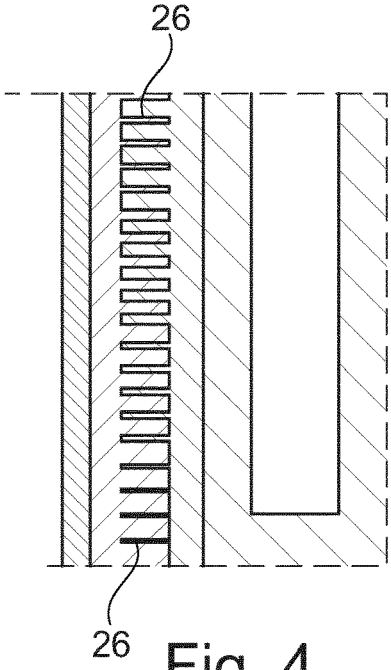

Fig. 4

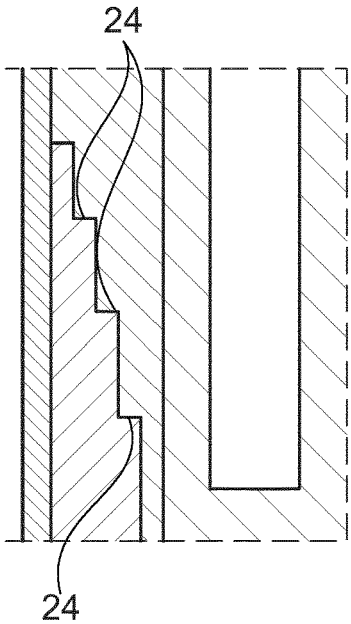

Fig. 5

AEROSOL-GENERATING DEVICE AND METHOD OF INDICATING AN OPERATIONAL STATE OF AN AEROSOL-GENERATING DEVICE

TECHNICAL FIELD

[0001] The invention relates to an aerosol-generating device and a method of indicating an operational state of an aerosol-generating device.

[0002] In recent years, conventional smoking products have been more and more replaced by aerosol-generating devices, in which a liquid is evaporated and can be inhaled by a user. In this context, it is desirable, to indicate at least one operational state of the aerosol-generating device, such as a heating state, which is related to readiness for inhalation by the user, to the user.

TECHNICAL BACKGROUND

[0003] U.S. Pat. No. 10,849,360B2 is related to an aerosol-generating device with an array of LEDs, which are switched corresponding to heaters, also provided in an array, and/or controlled by a controller. Further, thermosensitive paint can be provided corresponding to the heaters. Similar devices are derivable from KR20200000635A and CN210747275U.

SUMMARY OF THE INVENTION

[0004] Nevertheless, there remains a need for providing the described information to the user while maintaining a simple construction of the device and without complicating a control logic.

[0005] This is achieved by means of the subject-matter of claims **1** and **13**.

[0006] Accordingly, the aerosol-generating device has thermochromic material visible from outside the device and extending in a longitudinal direction, which can typically also be the longitudinal direction of the device, in other words the direction corresponding to the longest side thereof. Moreover, a heat transfer structure is provided inside the device relative to the thermochromic material and essentially extends in the same longitudinal direction as the thermochromic material and at least overlaps with it. Finally, a thermal resistance of the heat transfer structure, preferably having a heat transfer material increases gradually or step by step, in either case not necessarily with a monotone curve, in the longitudinal direction.

[0007] The structure will have the effect that the longitudinally extending thermochromic material will gradually or step by step change its colour. In particular, a first part, portion or section thereof will change its colour first, and can thus indicate towards the user, that, for example, heating has started. Due to the gradual increase of the thermal resistance, further parts, sections or portions of the thermochromic material will gradually change their colour, as heating continues, and the temperature of the heat rises, so that more and more heat is transferred to the thermochromic material despite the partially increased thermal resistance. The successively heated, and, consequently, colour changing portions can essentially have the shape of a bar or column, but they can also resemble a trademark, brand or logo.

[0008] The described structure is comparably robust, cheap and ergonomic and can even entertain the user waiting for heating to be completed, by means of the fact that the user can actually watch and observe the continuing heating process corresponding to the continuing colour change of the thermochromic material. In this context, the thermochromic material can originally have a colour, essentially corresponding to that of the outside of the device, so that the indicator described herein is initially invisible or almost invisible. Further, the thermochromic material can advantageously be chosen to change to a colour significantly different from that of the outside of the device, when heated, so that the continuous heating is easily visible. Moreover, a progressive colour change has the advantage of making it easier for the user to judge the progression of heating, as compared to a simple, static colour change in one and the same, constant portion of the device provided with a thermochromic material. Moreover, the device can be kept simple, both with regard to the internal structure and the control logic.

[0009] Advantageous embodiments are described in the further claims.

[0010] When the thermal resistance is highest at a mouthpiece end of the device, as currently preferred, this has the advantage of progressive colour change moving towards the mouthpiece, so that the user can easily understand the idea of heating up, until the mouthpiece, towards which the colour change progresses, can be used for inhaling.

[0011] The thermochromic material, in particular paint, can be smoothly and visually attractively integrated into the device, when it is filled in at least one recess formed on the surface of the device. In this manner, the material is both easily visible and at the same time disruptions of the device's surface can be avoided or at least minimized.

[0012] As regards the specific type of thermochromic material, a Leuco dyes-based paint is currently preferred.

[0013] As regards the details of the heat transfer structure responsible for transferring heat from a heater, such as an oven, to the thermochromic material, this is preferably adapted to reduce the temperature present at an inside end of the heat transfer structure by at least about 75% and preferably by a maximum of about 90%. This is related to the fact that heat needs to be transferred, but the outside surface of the device must not become too hot, as this would risk too high temperatures being applied to the user's hands. Typically, considering an oven target temperature of about 250°, the temperature present at the outside end of the heat transfer structure, in other words that end or surface, which is essentially in contact with the thermochromic material and transfers heat to it, should be at a maximum of about 45°.

[0014] Since heat can also be transferred to some extent in the longitudinal direction of the heater structure, this can be kept shorter than an oven or other heater inside the device in the longitudinal direction. In this manner, the structure can be simple, and heat can still be sufficiently transferred.

[0015] This can be insured particularly well, when the heat transfer structure fully overlaps with the heating device in the longitudinal direction.

[0016] Although the internal structure can be kept particularly simple, when heat is directly transferred to the heat transfer structure by the heating device, the heat transfer structure can alternatively, or additionally, be adapted to be heated by an electrical resistance. This can, for example, be easily controlled based on the heating progress.

[0017] Already indicated above, it will be particularly easy, and the thermochromic material will be particularly visible, when it is provided on at least one portion of the surface of the device.

[0018] As regards the thermal resistance of the heat transfer structure increasing in its longitudinal direction, this can easily be realized by composing the heat transfer structure of at least two different materials, the content of which changes along the longitudinal direction. The different materials typically have a different thermal resistance, and by varying the content thereof along the longitudinal direction, the thermal resistance can appropriately be varied, in particular, increased or decreased, depending on the direction considered.

[0019] Such a combination of two different materials can be realized particularly easy, if different materials are provided with at least one step. When the different materials are then combined in a complementary manner, the dimension measured along the step will remain the same throughout the entire heat transfer structure, but different contents of the different materials will be present along the longitudinal direction.

[0020] The same effect is essentially achieved, when the different materials are provided with at least two projections having different thicknesses measured in the longitudinal direction, and are combined in a manner such that the projections mesh with each other, so that the thermal resistance along the longitudinal direction can also be appropriately adjusted.

[0021] In the method of indicating at least one operational state of an aerosol-generating device as described herein, at least two portions of thermochromic material are heated successively due to the structure as detailed above. Further details and preferred embodiments of the method described herein essentially correspond to those of the device and can accordingly be applied to the method. This also applies vice versa in view of any method features mentioned herein.

BRIEF DESCRIPTION OF THE DRAWINGS

[0022] Hereinafter, the invention will be described with reference to exemplary embodiments thereof, in which

[0023] FIG. **1** shows a succession of schematic views of an aerosol-generating device with the indicator described herein,

[0024] FIG. **2** shows an internal structure of an essential part of the device in a first embodiment,

[0025] FIG. **3** shows an internal structure of an essential part of the device in a second embodiment,

[0026] FIG. **4** shows an alternative embodiment of the heat transfer structure, and

[0027] FIG. **5** shows a detail of FIG. **3**.

DETAILED DESCRIPTION OF PREFERRED EMBODIMENTS

[0028] As can be taken from FIG. **1**, an aerosol-generating device **10** can essentially have a rectangular appearance with a longest side and, correspondingly, a longitudinal direction extending vertically in FIG. **1**. At the top of the device **10**, a tobacco stick **12** is visible, so that the upper end in accordance with FIG. **1** essentially corresponds to a mouthpiece end. As can be taken from FIG. **1**A, before heating starts, the thermochromic material is, in the embodiment shown, essentially invisible, as it essentially has the same colour as the outside of the device **10**.

[0029] However, as can be taken from FIG. **1**B, as heating starts, in the embodiment shown, a circle or large dot **14**, in the embodiment shown centered in a lateral direction and just above the center in a longitudinal direction, will appear and indicate that heating has started. As can be taken from FIG. **1**C to E, the dot **14** grows, and colour change essentially progresses towards the mouthpiece end so as to form a kind of column **16** as visible in FIG. **1**E. As soon as the column does not grow towards the mouthpiece end anymore, this indicates to the user, that heating is completed, and the first puff can be drawn.

[0030] FIG. **2** shows a number of details of the internal structure of the device **10**, which are relevant only to the extent that a tubular oven **18** is present, into which the tobacco stick **12** is essentially inserted, and that a heat transfer structure **20** abuts the oven along a substantial length thereof. In the embodiment shown, the length of the heat transfer structure **20** is shorter than that of the oven, and essentially all of the heat transfer structure **20** abuts the oven **18**. Outside the heat transfer structure **20**, the thermochromic material **22**, successively being visible as the dot **14** of FIG. **1**B and eventually as the column **16** of FIG. **1**E, is provided. In the embodiment of FIG. **2**, the heat transfer structure is provided towards one of the smaller side surfaces of the device **10**.

[0031] In contrast, in the embodiment of FIG. **3**, the heat transfer structure **20** is provided towards one of the larger side surfaces facing the viewer of FIG. **1**. This can be taken from the fact that one of the smaller side surfaces faces the viewer of FIG. **3**, whereas it can be taken from the dimensions of FIG. **2**, that one of the larger side surfaces would face the viewer of FIG. **2**, if it was not removed for showing the internal structure.

[0032] In FIG. **3** it is already indicated, as shown in more detail in FIG. **5**, that two different materials, hatched differently, make up the heat transfer structure and are each provided with, in the embodiment shown, the three steps **24**. Further, they are combined with each other in a complementary manner, so that the dimension measured from left to right in FIGS. **3**, **4** and **5** remains the same along the longitudinal direction, which is vertical in all figures. However, due to the fact that the material, which is present to a greater extent at the bottom of FIG. **5**, has a thermal resistance smaller than that of the material being present to a greater extent towards the top of FIG. **5**, the thermal resistance is lower at the bottom and gradually increases towards the top. As a consequence, the colour change will progress as shown in FIG. **1**.

[0033] This also applies to the alternative embodiment shown in FIG. **4**, in which both materials constituting the heat transfer structure together, have plural projections **26**, the width of which changes along the longitudinal direction. In particular, the width measured in the longitudinal direction, of the material having the lower thermal resistance, is greater at the bottom of FIG. **4** and lower at the top of FIG. **4**, and it is exactly the other way around for the other material, having the higher thermal resistance, so that the total thermal resistance increases towards the top of FIG. **4**. In particular, the two materials are combined kind of meshing, in other words, each projection is accommodated in the space between two projections of the other material, so that an essentially solid heat transfer structure with the desired

thermal resistance gradient will be achieved, as it is the case with the embodiment of FIGS. **3** and **5**. This will result in the same progression or vertical motion of colour change indicated in FIG. **1**. In other words, due to the thermal resistance increasing toward the top of the figures, colour changes towards the top and achieves the desired visual effect.

1. An aerosol generating device having:

thermochromic material visible from outside the device and extending in a longitudinal direction,

a heat transfer structure inside the device relative to the thermochromic material and extending in substantially the same longitudinal direction as the thermochromic material and at least overlapping with it the thermochromic material,

wherein a thermal resistance of the heat transfer structure increases in the longitudinal direction.

2. The aerosol generating device of claim **1**, wherein the thermal resistance is highest at a mouthpiece end of the device.

3. The aerosol generating device of claim **1**, wherein the thermochromic material is filled in at least one recess formed on a surface of the device.

4. The aerosol generating device of claim **1**, wherein the thermochromic material is a Leuco dyes-based paint.

5. The aerosol generating device of claim **1**, wherein the heat transfer structure inside the device relative to the thermochromic material is adapted to reduce a temperature by at least 75%.

6. The aerosol generating device of claim **1**, wherein the heat transfer structure inside the device relative to the thermochromic material is shorter than an oven of the device in a longitudinal direction of the device.

7. The aerosol generating device of claim **6**, wherein the heat transfer structure fully overlaps with the oven in the longitudinal direction.

8. The aerosol generating device of claim **1**, wherein the heat transfer structure inside the device relative to the thermochromic material is adapted to be heated by an electrical resistance.

9. The aerosol generating device of claim **1**, wherein the thermochromic material is provided on at least one portion of a surface of the device.

10. The aerosol generating device of claim **1**, wherein the heat transfer structure is composed of at least two different materials, the content of which changes along the longitudinal direction.

11. The aerosol generating device of claim **10**, wherein the at least two different materials are provided with at least one step.

12. The aerosol generating device of claim **10**, wherein the at least two different materials are provided with at least two projections having different thicknesses measured in the longitudinal direction.

13. A method of indicating at least one operational state of an aerosol generating device by changing a colour of thermochromic material visible from outside the device, wherein at least two portions of thermochromic material are heated successively due to a thermal resistance of a heat transfer structure inside the device relative to the thermochromic material increasing in a longitudinal direction of the thermochromic material and the heat transfer structure.

14. The method of claim **13**, wherein heat is transferred to the thermochromic material from an oven and/or an electrical resistance.

15. The method of claim **14**, wherein the oven and/or the electrical resistance is controlled by a controller.

16. The aerosol generating device of claim **1**, wherein the heat transfer structure inside the device relative to the thermochromic material is adapted to reduce a temperature by a maximum of 90%.

* * * * *