(19) Europäisches Patentamt
European Patent Office
Office européen des brevets

(11) EP 3 456 473 B1

(12) **EUROPEAN PATENT SPECIFICATION**

(45) Date of publication and mention of the grant of the patent:
13.05.2020 Bulletin 2020/20

(51) Int Cl.:
B24B 23/04 *(2006.01)* ***B24B 45/00*** *(2006.01)*

(21) Application number: **18200787.2**

(22) Date of filing: **11.04.2013**

(54) **OSCILLATING TOOL ADAPTER**

SCHWINGWERKZEUGADAPTER

ADAPTATEUR D'OUTIL OSCILLANT

(84) Designated Contracting States:
AL AT BE BG CH CY CZ DE DK EE ES FI FR GB GR HR HU IE IS IT LI LT LU LV MC MK MT NL NO PL PT RO RS SE SI SK SM TR

(30) Priority: **11.04.2012 US 201261622894 P**
26.06.2012 US 201261664454 P

(43) Date of publication of application:
20.03.2019 Bulletin 2019/12

(62) Document number(s) of the earlier application(s) in accordance with Art. 76 EPC:
13163355.4 / 2 695 706

(73) Proprietor: **Black & Decker Inc.**
New Britain, CT 06053 (US)

(72) Inventors:
- **KAYE Jr., Thomas R.**
Bel Air, MD Maryland 21014 (US)
- **NIBLETT, James R.**
Elliot City, Maryland 21042 (US)
- **MUTI, David**
Nottingham, MD Maryland 21236 (US)
- **MONTPLAISIR, Sarah J.**
Kingsville, Maryland 21087 (US)

(74) Representative: **SBD IPAdmin**
270 Bath Road
Slough, Berkshire SL1 4DX (GB)

(56) References cited:
DE-A1- 4 209 146 **DE-U1-202011 051 408**
US-A1- 2011 266 759

Note: Within nine months of the publication of the mention of the grant of the European patent in the European Patent Bulletin, any person may give notice to the European Patent Office of opposition to that patent, in accordance with the Implementing Regulations. Notice of opposition shall not be deemed to have been filed until the opposition fee has been paid. (Art. 99(1) European Patent Convention).

Printed by Jouve, 75001 PARIS (FR)

Description

[0001] The present invention relates to power hand tools and more specifically to a clamp arrangement for releasably securing an accessory to an oscillating power hand tool.

[0002] Power hand tools are provided in many examples for performing a wide range of tasks. For example, some power hand tools can include an output member that is driven by a motor and that couples with an accessory to perform a working operation onto a work piece. For example, some hand tools can provide various configurations for attaching cutting accessories, grinding accessories, sanding accessories and the like. Some power hand tools are configured as oscillating tools that are operable to transmit an oscillating motion onto the accessory.

[0003] During the course of performing a working operation, a user may want to exchange one accessory for another accessory. For example, a user may want to exchange one grinding accessory with another grinding accessory or one sanding platen with another sanding platen. Alternatively, a user may wish to replace a cutting accessory with another cutting accessory. It is also contemplated that a user may want to replace a given accessory dedicated to one task (such as sanding) with another accessory dedicated toward another task (such as cutting for example). In any event, many power hand tools require the use of a secondary tool to swap out accessories. For example, many power hand tools require the use of a hand screw driver that can be used to retract a fastener that may lock the accessory to the output member of the power hand tool. In other examples, a wrench or other hand tool may be required to remove or unlock a given accessory from the power hand tool and subsequently lock another accessory back to the power hand tool.

[0004] Known clamp arrangements which do not require use of a secondary tool to swap out accessories are shown, for example in US 2011/0266759 A1. This discloses a clamp arrangement comprising first and second clamp members capable of selectively holding an oscillating accessory therebetween. The first clamp member is axially moveable, under action of a rotatable lever mechanism, between an open position along the output axis of the tool, which open position permits removal and insertion of the accessory and a closed position along the output axis of the tool, which closed position clamps the accessory to the oscillating tool output axis. The second clamp member and the accessory are formed with complimentary mounting features which permit selective alignment of the accessory with the mounting features.

[0005] DE 202011051408 U1 discloses a quick release clamp mechanism which can clamp a working member between a working mandrel and a fastening member. The fastening member is axially moveable along an oscillating axis of the tool to selectively clamp or release the working member.

[0006] In neither of the above known clamping arrangements is the first clamp member able to rotate relative to the tool axis.

[0007] The present invention is set out in claim 1, with preferred features thereof set out in the dependent claim.

[0008] The present invention provides a clamp arrangement for securing an accessory to an oscillating power tool, which comprises a clamp assembly including a first clamp member arranged to move relative to a second clamp member of the clamp assembly. The first clamp member is arranged to move between a closed position wherein the clamp assembly retains the accessory and an open position wherein the first clamp member is offset from the accessory permitting removal of the first accessory from the clamp assembly while the first clamp member remains coupled to the clamp assembly. The second clamp member has a first portion that opposes the first clamp member and is arranged to cooperate with the first clamp member to clamp an accessory between the first and second clamp members.

[0009] Further areas of applicability will become apparent from the description provided herein. The description and specific examples in this summary are intended for purposes of illustration only.

[0010] The drawings described herein are for illustrative purposes only of selected embodiments and not all possible implementations of the invention.

Fig. 1 is a perspective view of a known clamp arrangement, not forming part of the present invention;

Fig. 2 is a perspective view of a clamp assembly of the clamp arrangement shown in Fig. 1 and shown with the clamp assembly in the closed position retaining the first accessory;

Fig. 3 is an exploded perspective view of the clamp assembly of Fig. 2;

Fig. 4 is a sectional view of the clamp assembly of Fig. 2 and shown with the clamp assembly in the closed position and a lever of the clamp assembly in a first position;

Fig. 5 is a cross-sectional view of the clamp assembly of Fig. 4 and shown with the clamp assembly in the open position resulting from the lever being rotated about a pivot axle into a second position wherein the first accessory is subsequently lifted out of engagement with the first clamp member;

Fig. 6 is a cross-sectional view of the clamp assembly of Fig. 5 shown with the clamp assembly in the open position and the lever in the second position and illustrating the first accessory being removed from the clamp assembly;

Figs. 7-9 are perspective views of the clamp assembly that generally correspond to the sequence illustrated in Figs. 4-6 for removing the first accessory from the clamp assembly;

Figs. 10-12 are perspective views of the clamp assembly that illustrate an exemplary sequence of ori-

enting the first accessory in a different rotational position relative to the clamp assembly;

Figs. 13-15 are cross-sectional views of the clamp assembly taken through a spindle of the power hand tool and shown with the first accessory rotated at different positions around an axis of the spindle;

Fig. 16 is a perspective view of the clamp arrangement of the present teachings and shown with the clamp assembly secured to the second accessory;

Fig. 17 is an exploded perspective view of the clamp assembly and second accessory illustrated in Fig. 16;

Fig. 18 is a sectional view of the clamp assembly of Fig. 16 and shown with the clamp assembly in the open position resulting from movement of the lever around the pivot axle to the second position for receipt of a mounting collar of the second accessory;

Fig. 19 is a cross-sectional view of the clamp assembly of Fig. 18 and shown with the mounting collar of the second accessory positioned generally between first and second clamp members of the clamp assembly while the lever is maintained in the second position;

Fig. 20 is a cross-sectional view of the clamp assembly of Fig. 19 and illustrating the clamp assembly in the closed position as a result of the lever being released and returned to the first position causing the first and second clamp members to clamp the mounting collar;

Fig. 21 is a perspective view of an exemplary third accessory;

Fig. 22 is a partial cross-section of the clamp assembly and shown with the third accessory secured to an auxiliary mounting surface of the second clamp member;

Figs. 23-25 illustrate an exemplary assembly sequence of a fourth accessory having a throat that defines a relatively narrower opening as compared to the first accessory wherein the throat is slidably directed through channels provided on the spindle;

Fig. 26 is an exploded partial plan view of the fourth accessory and shown adjacent to the second clamp member and illustrated with the spindle in cross-section taken through the channels;

Fig. 27 is a partial plan view of a fifth accessory having circular mounting passages according to additional features;

Fig. 28 is a partial plan view of the fifth accessory shown in Fig. 27 and illustrated interfacing with the second clamp member;

Fig. 29 is a side view of a clamp arrangement constructed in accordance to another known example, again, not forming part of the present invention;

Fig. 30 is a sectional view of the clamp assembly of Fig. 29 and shown with the clamp assembly in a closed position and a lever of the clamp assembly in a first position;

Fig. 31 is a perspective view of the second clamp member of the clamp assembly of Fig. 30;

Fig. 32 is a plan view of an accessory constructed in accordance to one example of the present teachings;

Fig. 33 is a side view of the accessory of Fig. 32 shown placed on the second clamp member and shown with the first clamp member removed for illustrative purposes;

Fig. 34 is a side view of the clamp assembly shown during removal of the accessory where the lever is moved from the first position (phantom) to a second position (solid line) and the first clamp member is raised away from engagement with the accessory;

Fig. 35 is an exploded perspective view of a clamp assembly constructed in accordance to another example, but which is not part of the present invention, but showing a fastener for selectively and alternatively coupling the clamp assembly to one of a first power tool or a second power tool;

Fig. 36 is a sectional view of the clamp assembly of Fig. 35 shown coupled to a first tool mating detail of the first power tool;

Fig. 37 is a cross-sectional view of the clamp assembly of Fig. 36 and shown with the clamp assembly in the open position resulting from the lever being rotated about a pivot axle into a second position wherein an accessory may be inserted for clamping;

Fig. 38 is a cross-sectional view of the clamp assembly of Fig. 37 and shown with the clamp assembly in a closed position wherein the accessory is clamped between the first and second clamp members;

Fig. 39 is a front perspective view of a clamp assembly, which os not part of the present invention;

Fig. 40 is an exploded perspective view of the clamp assembly of Fig. 39 and shown operatively associated with the first power tool and a fastener;

Fig. 41 is a cross-sectional view of the clamp assembly of Fig. 40 shown in an installed position wherein the fastener threadably mates with an output member of the first power tool;

Fig. 42 is a cross-sectional view of the clamp assembly of Fig. 41 and shown with the clamp assembly in the open position for receipt of an accessory;

Fig. 43 is a cross-sectional view of the clamp assembly of Fig. 42 and shown with the clamp assembly in the closed position and clamping the accessory between a first and second clamp member;

Fig. 44 is an exploded perspective view of a clamp assembly which is not part of the present invention;

Fig. 45 is an exploded cross-sectional view of the clamp assembly of Fig. 44;

Fig. 46 is a cross-sectional view of the clamp assembly of Fig. 45 and shown with an accessory coupled to an outboard face of a clamp member with an adapter plate, a clamp plate, and a fastener;

Fig. 47 is a front perspective view of a clamp assembly which is not part of the present invention;

Fig. 48 is an exploded perspective view of the clamp

assembly of Fig 47;
Fig. 49 is a cross-sectional view of the clamp assembly of Fig. 47 and shown with the clamp assembly in the open position for receipt of an accessory;
Fig. 50 is a cross-sectional view of the clamp assembly of Fig. 49 and shown with the clamp assembly in the closed position and clamping the accessory between the first and second clamp member;
Fig. 51 is a front perspective view of a clamp assembly which is not part of the present invention;
Fig. 52 is an exploded perspective view of the clamp assembly of Fig. 51;
Fig. 53 is a cross-sectional view of the clamp assembly of Fig. 51 and shown with the clamp assembly in the open position for receipt of an accessory;
Fig. 54 is a cross-sectional view of the clamp assembly of Fig. 53 and shown with the clamp assembly in the closed position for clamping the accessory between the first and second clamp member;
Fig. 55 is a cross-sectional view of clamp assembly constructed in accordance to other examples, which are not part of the present invention, and shown in an open position for receipt of an accessory in the form of a sanding platen;
Fig. 56 is a cross-sectional view of the clamp assembly of Fig. 55 and shown with the clamp assembly in the closed position and clamping the accessory between the first and second clamp member;
Fig. 57 is a front perspective view of a clamp assembly constructed in accordance with the present invention and with the clamp assembly shown in an open position;
Fig. 58 is an exploded perspective view of the clamp assembly of Fig. 57;
Fig. 59 is a front perspective view of the clamp assembly of Fig. 57 and shown in a closed position;
Fig. 60 is a front perspective view of a clamp assembly having an alternate attachment plate and shown in the closed position;
Fig. 61 is a front perspective view of a cam body of the clamp assembly of Fig. 57;
Fig. 62 is a perspective view of a first clamp member body of the clamp assembly of Fig. 57;
Fig. 63 is a sectional view of the cam body of Fig. 61;
Fig. 64 is a sectional view of the first clamp member body of Fig. 62;
Fig. 65 is another sectional view of the clamp member body of Fig. 62;
Fig. 66 is a plan view of the cam body of Fig. 61;
Fig. 67 is a plan view of the first clamp member body of Fig. 62;
Fig. 68 is a sectional view of the clamp assembly of Fig. 57 and shown in a closed position;
Fig. 69 is a sectional view of the clamp assembly of Fig. 57 and shown in an intermediate position;
Fig. 70 is a sectional view of the clamp assembly of Fig. 57 and shown in an open position;
Fig. 71 is a top perspective view of a clamp arrangement constructed in accordance to additional features of the present disclosure;
Fig. 72 is a bottom perspective view of the clamp arrangement of Fig. 71;
Fig. 73 is a top perspective view of a clamp arrangement constructed in accordance to other features of the present disclosure;
Fig. 74 is a bottom perspective view of the clamp arrangement of Fig. 73;
Fig. 75 is a perspective view of an alternate attachment plate according to the present disclosure;
Fig. 76 is a perspective view of an alternate attachment plate according to the present disclosure;
Fig. 77 is a perspective view of an alternate attachment plate according to the present disclosure; and
Fig. 78 is a front perspective view of an alternative clamp assembly.

[0011] Corresponding reference numerals indicate corresponding parts throughout the several views of the drawings.

[0012] Known examples and example embodiments of the invention will now be described more fully with reference to the accompanying drawings.

[0013] With initial reference to Fig. 1, a known clamp arrangement is shown and generally identified at reference numeral 10. The clamp arrangement 10 is shown operatively associated with a power tool 12 for selectively and alternatively retaining various accessories, such as a first accessory 14a or a second accessory 14b. The exemplary power tool can generally include a tool body 18 including a housing 20 that generally contains a motor 22 that drives an output member 24. The output member 24 can be coupled to a spindle 26. The exemplary power tool 12 is configured for providing an oscillating motion onto the spindle 26. It will be appreciated that while the clamp arrangement 10 is disclosed herein as part of an oscillating power hand tool, the clamp arrangement 10 may be also configured for use with other power tools that releasably secure an accessory.

[0014] The clamp arrangement 10 can further include a clamp assembly 30 that operatively cooperates with an actuator such as a lever 32. The clamp assembly 30 can generally include a first clamp member 36 and a second clamp member 38. The lever 32 can include a lever arm 40 that includes a user engagement portion 42 and a block 44. The lever 32 can further include a pivot portion 46 having a pivot axle 48.

[0015] With continued reference to Fig. 1, the second accessory 14b will be briefly described. The second accessory 14b can generally include a sanding platen 50 having a platen body 52 and a mounting collar 54. In the example shown, the mounting collar 54 can be coupled to the body 52 by way of a series of fasteners 56. The body 52 can be configured to support an abrasive sheet, such as sand paper and the like as is known in the art. The mounting collar 54 can generally include an upper plate portion 60 having a plurality of mounting features

62. In the example shown, the mounting features 62 are generally in the form of passages formed through the mounting collar 54. The mounting collar 54 can generally include an open-ended aperture or throat 66 configured to accept the spindle 26 in an assembled position as will be described herein.

[0016] With additional reference now to Figs. 2 and 3, the clamp assembly 30 will be described in greater detail. The second clamp member 38 can include a second clamp body 70 generally in the form of a ring having a central opening 72. The second clamp body 70 can generally comprise a second clamping surface 74 having a plurality of mounting features 76 formed thereon. In the example shown, the plurality of mounting features 76 are in the form of male protrusions 78. In the particular example shown, eight protrusions each having a tapered shape or form are provided. However, other configurations are contemplated. The second clamp body 70 can additionally include an auxiliary attachment surface 80 having a plurality of auxiliary mounting features 82 (Fig. 2). Again, the plurality of auxiliary mounting features 82 are shown in the form of male protrusions and may include a similar eight protrusion configuration as provided on the second clamping surface 74. The auxiliary mounting features 82 can each have a diameter of 2.4mm. Other configurations are contemplated.

[0017] With reference now to Figs. 3 and 4, the first clamp member 36 can generally include a first clamp member body 84 having an annular flange 86. The first clamp member body 84 can include a first clamping surface 87 having a plurality of mounting features 88 (Fig. 4). In the example shown, the plurality of mounting features 88 are in the form of recesses that cooperatively receive the corresponding plurality of mounting features 76 of the second clamp member 38. The mounting features 88 can have any configuration, such as blind bores, or circular grooves being suitable to accept the male protrusions of the mounting features 76. The annular flange 86 can generally extend radially on an end of an outer hub 90 of the first clamp member body 84. The annular flange 86 can have a lever opposing surface 91. The first clamp member body 84 can further include an inner hub 92 that defines a first clamp member opening 94. The first clamp member opening 94 can be configured to receive the spindle 26. An annular channel 96 can be formed between the outer hub 90 and the inner hub 92. The annular channel 96 can have a terminal surface 98.

[0018] The lever 32 can generally include a lever body 100 having the user engagement portion 42 formed generally on a first end and the pivot portion 46 formed on an opposite end. According to one known example, the pivot portion 46 can generally include a pair of lobes 102 that each define an axle passage 104. The lever body 100 can further include a pocket 108 having a flange opposing surface 110 for generally receiving two steel balls and the annular flange 86 of the first clamp member 36. The block 44 can generally include a pair of transverse posts 116 and a blind bore 118. The axle passages 104 provided in the lobes 102 can be configured to receive the pivot axle 48.

[0019] The clamp arrangement 10 can additionally include a first biasing member 120 and a second biasing member 122. The first biasing member 120 can be at least partially received by the annular channel 96 provided on the first clamp member body 84. The second biasing member 122 can be at least partially received into the blind bore 118 of the block 44. The first biasing member 120 can be generally supported on an upper end by a washer 126 that is correspondingly supported by a bearing 130 journalled around the spindle 26. The spindle 26 can additionally include a pair of flats 132 and channels 134 formed on a distal end. The flats 132 can generally correspond to the profile of the opening 72 formed in the second clamp member 38. The flats 132 can cooperate with the profile of the opening 72 to key the second clamp member 38 to the spindle 26 and inhibit rotation of the second clamp member 38 around a spindle axis 140. In the example provided, the output member 24 can be generally in the form of a drive fork that can impart rotational motion onto the spindle 26 around the spindle axis 140. Other configurations are contemplated. A support bearing 142 can be arranged on one end of the spindle 26 for cooperatively mounting within the housing 20.

[0020] Returning to Fig. 3, the first accessory 14a can be generally in the form of a cutting member having a working portion 146 and an attachment portion 148. The attachment portion 148 can include a plurality of mounting features 150 in the form of passages formed through the first accessory 14a. The attachment portion 148 can further include an open-ended aperture or throat 152 for selectively receiving a portion of the spindle 26 in an assembled position as will be described herein.

[0021] With specific reference now to Figs. 4-6, an exemplary sequence of removing the first accessory 14a from the clamp assembly 30 will be described. With initial reference to Fig. 4, the clamp assembly 30 is shown in a closed position wherein the biasing member 120 is supported on a first end by the washer 126 and provides a downward biasing force onto the first clamp member 36 at the annular channel 96. It is important to recognize that in the particular example shown, the second clamp member 38 is fixed to the spindle 26. As shown, the male protrusions of the mounting features 76 selectively locate into the recesses of the mounting features 88 formed on the first clamp member 36. The first accessory 14a therefore is clamped between the second clamping surface 74 and the first clamping surface 87 while the male protrusions of the mounting features 76 locate through passages of the mounting features 150 formed on the first accessory 14a. Those skilled in the art will recognize that while some of the mounting features are described and shown as male protrusions and some of the mounting features are described and shown as recesses, the locations may be swapped. Moreover, other interlocking geometries may be used. As viewed in Fig. 4, the lever

32 is shown and generally described herein as the first position.

[0022] With specific reference now to Fig. 5, the lever 32 is shown rotated around a pivot axle axis 160 of the pivot axle 48 to a second position. In the second position, the clamp assembly 30 is generally in the open position where the first clamp member 36 is displaced or offset relative to the second clamp member 38. In order to move the lever 32 from the first position (Fig. 4) to the second position (Fig. 5), a user can urge the user engagement portion 42 (such as by pulling the user engagement portion 42 with an index finger) in a direction generally upwardly as viewed in Fig. 5 and toward the housing 20. In order to rotate the lever 32 around the pivot axle 48, a user must overcome the biasing forces of the respective first and second biasing members 120 and 122. During rotation of the lever 32 around the pivot axle 48, the flange opposing surface 110 in the pocket 108 of the lever body 100 (Fig. 3) generally transmits an upward force (in a direction against the biasing force of the first biasing member 120) onto the lever opposing surface 91. In this regard, the lever 32 can generally lift the first clamp member 36 at the annular flange 86 to move the first clamping surface 87 away from the second clamping surface 74. It will be appreciated that other mechanical configurations other than a lever that pivots about a pivot axle may be used. For example, a camming configuration or slidable actuation member may be additionally or alternatively employed.

[0023] With the clamp assembly 30 in the open position, the first and second clamp members 36 and 38, respectively, provide enough clearance, such that a user can remove the first accessory 14a away from the clamp assembly 30. In one example, it may be necessary to initially lift the first accessory 14a away from the male protrusions of the mounting features 76 before pulling the first accessory 14a away from the clamp assembly 30 (Fig. 6).

[0024] The clamp arrangement 10 can provide a significant mechanical advantage that can provide a particularly robust clamping action onto an accessory in a tight package requiring relatively small space. In this regard, by mounting the pivot axle 48 on an opposite end of the user engagement portion 42 a user is offered a significant moment arm that can act against the respective biasing forces of the first and second biasing members 120 and 122 while still offering a significant clamping force. According to other advantages, the location of the user engagement portion 42 provides an ergonomically pleasing configuration adjacent to the housing 20 where a user's palm would be generally positioned. In this regard, an index finger can easily negotiate onto the user engagement portion 42 without having to significantly reposition a user's palm. Moreover, the user engagement portion 42 can be generally located between the housing 20 and the first accessory 14a, such that a user can easily pull up on the user engagement portion 42 in a direction toward the housing with one hand while removing/installing any given accessory with the other hand.

[0025] With specific reference now to Figs. 7-9, perspective views of the clamp assembly 30 are shown wherein Fig. 7 generally corresponds to the sectional view of Fig. 4 of the clamp assembly 30 in the closed position and the lever 32 in the first position. Fig. 8 generally corresponds to the sectional view of Fig. 5 where the clamp assembly 30 is in the open position and the lever 32 is in the second position. Fig. 9 generally corresponds to the sectional view of Fig. 6 where the clamp assembly 30 is in the open position and the lever 32 is in the second position while the first accessory 14a is removed from the clamp assembly 30.

[0026] With reference now to Figs. 10-12, the clamp assembly 30 can be used to selectively clamp a given accessory, such as the first accessory 14a through a variety of rotational orientations around the spindle axis 140. As identified above, the second clamp member 38 includes eight mounting features 76 however other configurations may be incorporated. The first accessory 14a includes nine mounting features or passages 150. The first accessory 14a can be arranged in a plurality of different rotational orientations, such that the male protrusions 78 can be aligned for passing through the passages 150 by rotating the first accessory 14a into the orientation desired. As can be appreciated, it may be advantageous to orient the first accessory 14a differently for a particular task. Once the passages 150 are aligned for receipt of the male protrusions 78 on the second clamp member 38 the attachment portion 148 of first accessory is dropped onto the second clamping surface 74.

[0027] In the exemplary sequence shown in Figs. 10-12, a user can initially pull up the lever 32 at the user engagement portion 42 causing the annular flange 86 of the first clamp member 36 to be lifted as previously described. With the first clamp member 36 displaced from the second clamp member 38, the first accessory 14a can be oriented into the desired radial position and aligned with the corresponding male protrusions 78. The user can then release the user engagement portion 42 allowing the first biasing member 120 (and the second biasing member 122) to urge the first clamp member 36 in a direction toward the second clamp member 38 until the respective first and second clamping surfaces 87 and 74, respectively, engage and clamp the attachment portion 148 of the first accessory 14a (Fig. 12).

[0028] Turning now to Figs. 13-15, various known examples are shown with the first accessory 14a mounted around the second clamp member 38. In the examples shown, the male protrusions of the mounting features 76 can be arranged to allow the first accessory 14a to be indexed at about thirty-degree increments around the second clamping surface 74. When describing the male protrusions of the mounting features 76 in the context of a clock, mounting features are absent at the two, four, eight and ten o'clock positions. Other examples are contemplated.

[0029] With reference now to Figs. 16-20, the known

clamp assembly 30 will be described clamping the second accessory 14b. As described above, the clamp assembly 30 is normally biased into the closed position. As illustrated in Fig. 18, the lever 32 is shown rotated around the pivot axle axis 160 of the pivot axle 48 to the second position. In the second position, the clamp assembly 30 is generally in the open position where the first clamp member 36 is displaced relative to the second clamp member 38. With the clamp assembly 30 in the open position, the first and second clamp members 36 and 38 respectively provide enough clearance to accept the mounting collar 54 of the second accessory 14b.

[0030] While a user maintains an upward force on the user engagement portion 42 of the lever 32, the second accessory 14b is directed toward the clamp assembly 30, such that the spindle 26 is generally located through the throat 66 (Fig. 19). Once the desired mounting features 62 of the mounting collar 54 are aligned with the desired mounting features 76 of the second clamp member 38, the user can release the user engagement portion 42 of the lever 32 allowing the respective first and second biasing members 120 and 122 to return the lever 32 to the first position (Fig. 20). In the first position, the clamp assembly 30 is in the closed position, such that the first clamping surface 87 of the first clamp member 36 as well as the second clamping surface 74 of the second clamp member 38 cooperatively clamp the mounting collar 54 of the second accessory 14b.

[0031] Turning now to Figs. 21 and 22, a third accessory 14c and a method of attaching the third accessory 14c to the auxiliary attachment surface 80 of the second clamp member 38 will be described. The third accessory 14c can generally include an iron-shaped member 170. A plurality of mounting features 176 can be formed around an upper surface 178 of a body 172 of the third accessory 14c. In the example shown, the plurality of mounting features 176 can be in the form of recesses having a profile that generally mates with the plurality of mounting features 82 extending from the auxiliary attachment surface 80. A mounting aperture 180 can be formed through the body 172 of the third accessory 14c for accepting a fastener 182 (Fig. 22). The fastener 182 can threadably mate with a threaded bore 186 defined at a distal end of the spindle 26. Those skilled in the art will readily appreciate that movement of the lever 32 will not affect the attachment of the third accessory 14c as the third accessory 14c only interfaces with the second clamp member 38 that is rigidly fixed to the spindle 26.

[0032] Turning now to Figs. 23-26, a fourth accessory 14d will be described cooperating with the spindle 26 and the second clamp member 38. The channels 134 formed in the spindle 26 can provide clearance for accepting other accessories, such as accessories that may define a throat 152 having a smaller entrance. In this regard, the reduced geometry throat of an accessory may be initially negotiated through the channel 134 prior to rotating the accessory into the desired orientation relative to the spindle 26 and subsequently clamping the accessory to the clamp assembly 30.

[0033] The fourth accessory 14d can have an open-ended aperture or throat 190 formed on an attachment portion 192. The throat 190 can generally span a distance 194. As compared to the throat 152 on the first accessory 14a, the throat 190 provides a reduced distance 194. The channels 134 provided on the spindle 26 are offset a distance 196 that is generally less than the distance 194, such that the throat 190 can be advanced through the channels 134 until clearing the channels 134 at an opposite end of the spindle 26 (see Fig. 24). Once the throat 190 has cleared the channels 134, a user can rotate the fourth accessory 14d to a desired orientation around the second clamping surface 74 of the second clamp member 38. Once the desired orientation has been attained, the attachment portion 192 of the fourth accessory 14d can be dropped onto the second clamping surface 74 while the male protrusions of the mounting features 76 locate through respective passages 198 formed through the attachment portion 192 on the fourth accessory 14d (Fig. 25). Fig. 26 illustrates a plan view that represents the relative distances 194 of the throat 190 and 196 of the channels 134.

[0034] With reference now to Figs. 27 and 28, a fifth accessory 14e is shown that has an attachment portion 200 having a plurality of mounting formations 202 formed therethrough. The mounting formations 202 can be generally in the form of circular apertures. The circular apertures can have a tapered shape. Other dimensions are contemplated that may still have a diameter (or opening in general) that is large enough to accept the diameter of the respective mounting features 76 on the second clamp member 38.

[0035] With reference now to Figs. 29-34, another known clamp arrangement is shown and generally identified at reference numeral 210. The clamp arrangement 210 is shown operatively associated with a power tool 212 for selectively and alternatively retaining various accessories such as a sixth accessory 14f. The exemplary power tool 212 can generally include a tool body 218 including a housing 220 that generally contains a motor 222 that drives an output member 224. The output member 224 can be coupled to a spindle 226. The exemplary power tool 212 is configured for providing an oscillating motion onto the spindle 226. As with the clamp arrangement 10 described above, the clamp arrangement 210, while described herein as part of an oscillating hand tool, can also be used with other power tools that releasably secure an accessory.

[0036] The clamp arrangement 210 can further include a clamp assembly 230 (Fig. 30) that operatively cooperates with a lever 232. The clamp assembly 230 can generally include a first clamp member 236 and a second clamp member 238. The lever 232 can include a lever arm 240 that includes a user engagement portion 242. The lever 232 can further include a pivot portion 246 having a pivot axle 248.

[0037] With specific reference now to Figs. 30 and 31,

the second clamp member 238 will be further described. The second clamp member 238 can include a second clamp body 250 generally in the form of a ring having a central opening 252. The second clamp body 250 can generally comprise a second clamping surface 254 having a plurality of mounting features 256 formed thereon. In one example, the second clamp body 250 and the plurality of mounting features 256 can be formed as a unitary, monolithic part, such as by precision cast steel.

[0038] As will become appreciated by the following discussion, the second clamp member 238 is configured such that the second clamping surface 254 does not actually engage the sixth accessory 14f. In the example shown, the plurality of mounting features 256 are in the form of male conical protrusions 258. In the particular example shown, eight protrusions or male conical protrusions 258 are configured to each have a tapered body portion 260 that generally tapers from the second clamping surface 254 toward a tip 262. The tip 262 can generally comprise a spherical geometry. The male conical protrusions 258 each have a height 264 measured from the second clamping surface 254 to a terminal end 266 of the tip 262. The male conical protrusions 258 can further define an angle 270 measured from a longitudinal axis 272 to an outer surface 276 of the tapered body portion 260.

[0039] The male conical protrusions 258 can be configured to engage apertures of the sixth accessory 14f at a position intermediate the terminal end 266 of the tip 262 and the second clamping surface 254. Explained differently, the sixth accessory 14f can be clamped with the lever 232 in a first position and the clamp assembly 230 closed (Fig. 30), such that the sixth accessory 14f is offset a distance 280 from the second clamping surface 254. According to one example, the height 264 can be substantially about 4mm and the angle 270 can be substantially about between 20° and 30° and more specifically 25°. A diameter of the male conical protrusions 258 measured at the second clamping surface 254 can be substantially about 3mm. The surface finish of the male conical protrusions 258 can be sufficiently hard so as not to deform from interaction with the sixth accessory 14f. In one example, the male conical protrusions are at least 10 points (Rockwell hardness testing) harder than the sixth accessory 14f. Other heights and angles are contemplated.

[0040] With specific reference now to Fig. 30, the first clamp member 236 can generally include a first clamp member body 284 having an annular flange 286. The first clamp member body 284 can include a clamping surface 287 that has a plurality of mounting features 288 that are in the form of recesses that cooperatively receive the corresponding plurality of mounting features 256 of the second clamp member 238. The mounting features 288 can have any configuration, such as blind bores having diameters suitable to accept at least portions of the male conical protrusions 258 of the mounting features 256. The annular flange 286 can generally extend radially from an outer hub 290 of the first clamp member body 284. The annular flange 286 can have a lever opposing surface 291. The first clamp member body 284 can further include an inner hub 292 that defines a first clamp member opening 294. The first clamp member opening 294 can be configured to receive the spindle 226. An annular channel 296 can be formed between the outer hub 290 and the inner hub 292. The annular channel 296 can have a terminal surface 298.

[0041] The lever 232 can generally include a lever body 300 having the user engagement portion 242 formed generally on a first end and the pivot portion 246 formed on an opposite end. According to one example, the pivot portion 246 can generally include a pair of lobes 302 that each define an axle passage similar to the axle passage 104 described above with respect to Fig. 3. The lever body 300 can further include a pocket 308 having a flange opposing surface 310. A retainer plate 312 can be formed on the lever body 100. The retainer plate 312 can be configured to rest on the annular flange 286 when the lever 232 is released. The pivot axle 248 can be configured to pass through the respective axle passages of the lobes 302 and a corresponding axle passage 316 formed through an arm 318 extending from the housing 220.

[0042] The clamp arrangement 210 can additionally include a biasing member 320 and a washer 326. The biasing member 320 can be at least partially received by the annular channel 296 provided on the first clamp member body 284. The biasing member 320 can be generally supported on an upper end by a washer 326 that is correspondingly supported by a flange on the spindle 226. A distal end of the spindle 226 can be configured to attain a press fit relationship (through the central opening 252) with the second clamp body 250.

[0043] With particular reference now to Fig. 32, the sixth accessory 14f will be described. The sixth accessory 14f can generally be in the form of a cutting member having a working portion 346 and an attachment portion 348. The attachment portion 348 can include a plurality of mounting features 350 in the form of passages formed through the sixth accessory 14f. The attachment portion 348 can further include an open-ended aperture or throat 352 for selectively receiving a portion of the spindle 226 in an assembled position as will be described herein. The plurality of mounting features 350 can be circular and have a diameter 358 of substantially about 2.8mm. The throat 352 can define an angle 360 of about 60°. Other dimensions are contemplated. It will be appreciated however that the diameter 358 is selected to have a geometry such that it will engage the tapered body portion 260 of the male conical protrusions 258 at a location intermediate the terminal end 266 of the tip 262 and the second clamping surface 254. More particularly, the diameter 358 has a geometry that will ensure the attachment portion 348 does not bottom out or rest on top of the second clamping surface 254. In other words, the distance 280 (Fig. 30) must be greater than zero.

[0044] The mounting features 256 can be arranged to

allow the sixth accessory 14f to be indexed at about 30° increments around the second clamping surface 254. Like the mounting features 76 described above, the mounting features 256 are absent at the two, four, eight and ten o'clock positions. It is further appreciated that the clamp assembly 230 can be used to clamp other accessories, such as described herein. Other configurations are contemplated.

[0045] With specific reference now to Figs. 30 and 34, an exemplary sequence of removing the sixth accessory 14f from the clamp assembly 230 will be described. With initial reference to Fig. 30, the clamp assembly 230 is shown in a closed position wherein the biasing member 320 is supported on a first end by the washer 326 and provides a downward biasing force onto the first clamp member 236 at the annular channel 296. It is important to recognize that in the particular example shown, the second clamp member 238 is fixed relative to the spindle 226. As shown, the male conical protrusions 258 selectively locate into the recesses of the mounting features 288 formed on the first clamp member 236. The sixth accessory 14f therefore is clamped between the clamping surface 287 and the outer surfaces 276 of the respective male conical protrusions 258. Again, the sixth accessory 14f is clamped at a location offset from the second clamping surface 254 of the second clamp member 238. As viewed in Fig. 30, the lever 232 is shown and generally described herein as the first position. Because the sixth accessory 14f is specifically engaged at the mounting features 350, the sixth accessory 14f can be securely fixed against the clamping surface 287 with minimal or no relative movement between the sixth accessory 14f and the clamp assembly 230.

[0046] Turning now specifically to reference Fig. 34, the lever 232 is shown rotated from the first position (phantom line) around the pivot axle axis 249 to a second position (solid line). In the second position, the clamp assembly 230 is generally in the open position where the first clamp member 236 is displaced or offset relative to the second clamp member 238. In order to move the lever 232 from the first position (phantom line, Fig. 34) to the second position (solid line, Fig. 34), a user can urge the user engagement portion 242 (such as by pulling the user engagement portion 242 with an index finger) in a direction generally upwardly as viewed in Fig. 34 and toward the housing 220. In order to rotate the lever 232 around the pivot axle 248, a user must overcome the biasing force of the biasing member 320 (Fig. 30). During rotation of the lever 232 around the pivot axle 248, the flange opposing surface 310 and the pocket 308 of the lever body 300 generally transmits an upward force (in a direction against the biasing force of the biasing member 320) onto the lever opposing surface 291. In this regard, the lever 232 can generally lift the first clamp member 236 at the annular flange 286 to move the clamping surface 287 away from the second clamp member 238.

[0047] With the clamp assembly 230 in the open position, the first and second clamp members 236 and 238, respectively, provide enough clearance, such that a user can remove the sixth accessory 14f away from the clamp assembly 230. In one example, it may be necessary to initially lift the sixth accessory 14f away from the male conical protrusions 258 before pulling the sixth accessory 14f away from the clamp assembly 230.

[0048] The pivot axle 248 can be located a distance 370 measured perpendicularly from a point 372 on a longitudinal centerline of the spindle 226. In one example, the distance 370 can be long enough to give the user a mechanical advantage to comfortably overcome the bias of the biasing member 320 when moving the lever 232 to the second position (clamp assembly 230 open). A distance 374 measured between the point 372 and a plane defined by the clamping surface 287 can be less than the distance 370.

[0049] With reference now to Figs. 35-38, another comparative clamp arrangement is shown and generally identified at reference numeral 410. The clamp arrangement 410 is shown operatively associated with a first power tool 412a and a second power tool 412b. As will be described in detail herein, the clamp arrangement 410 includes a clamp assembly 414 that is configured to be selectively and alternatively coupled to either of the first power tool 412a or the second power tool 412b. The clamp assembly 414 is configured to selectively and alternatively retain various accessories such as a seventh accessory 14g (Fig. 37). As will become appreciated from the following discussion, the clamp assembly 414 is configured to suitably couple with an output member 416a provided on the first power tool 412a or an output member 416b provided on the second power tool 412b. In this regard, the output member 416a may include a first tool mating detail 418a having a first mating geometry 420a. The output member 416b may incorporate a second tool mating detail 418b having a second mating geometry 420b. In the example shown, the first mating geometry 420a provided on the output member 416a includes twelve circular shaped protrusions 422a. The second mating geometry 420b provided on the output member 416b includes a male protrusion 422b. The male protrusion 422b may alternatively comprise either of a four-point star or a hexagonal protrusion. As will become appreciated herein, the clamp assembly 414 includes complementary geometry suitable to selectively and alternatively mate with an output member 416a having a male protrusion 422b in the form of a four-point star or a hexagon.

[0050] The first power tool 412a generally includes a tool body 430a having a housing 432a that generally contains a motor 434a that drives the output member 416a. Similarly, the second power tool 412b includes a tool body 430b having a housing 432b that contains a motor 434b that drives the output member 416b. The output members 416a and 416b of the respective first and second power tools 412a and 412b can be configured to provide an oscillating motion.

[0051] The clamp assembly 414 generally includes an

attachment plate 440 having a lever 442 pivotally coupled thereto. The clamp assembly 414 can generally include a first clamp member 446 and a second clamp member 448 (Fig. 36). The lever 442 can include a lever arm 450 that includes a user engagement portion 452. The lever 442 can further include a pivot portion 454 having a pivot axle 456.

[0052] The second clamp member 448 can include a second clamp body 460 generally in the form of a ring having a central opening 462. The second clamp body 460 can generally comprise a second clamping surface 464 having a plurality of mounting features 466 formed thereon. In one example, the second clamp body 460 and the plurality of mounting features 466 can be formed as a unitary, monolithic part, such as by precision cast steel. In other examples, the plurality of mounting features 466 may be separately formed and coupled to the clamp body 460. The second clamp member 448 may be configured similarly to the second clamp member 238 described above. In this regard, the second clamp member 448 may comprise eight protrusions or male conical portions that are configured to each have a tapered body portion that generally tapers from the second clamping surface 464 toward a tip.

[0053] The first clamp member 446 can generally include a first clamp member body 474 having an annular flange 476. The first clamp member body 474 can include a clamping surface 478 that has a mounting feature 480 that is in the form of an annular recess that cooperatively receive the corresponding plurality of mounting features 466 of the second clamp member 448. The mounting feature 480 can have any configuration that may cooperatively accept at least portions of the mounting features 466. The annular flange 476 can generally extend radially from an outer hub 490 of the first clamp member body 474. The annular flange 476 can have a lever opposing surface 492. The first clamp member body 474 can further include an inner hub 494 that defines a first clamp member opening 496. The first clamp member opening 496 can be configured to receive a fastener 500. The fastener 500 can generally include a fastener head 502 and threads 504 formed on a distal end 506. The head 502 may incorporate an optional flange 508. The threads 504 can be configured to threadably mate with a threaded bore 510a defined in the output member 416a (or a threaded bore 510b formed in the output member 416b). In some examples, a cannulated sleeve 512 having a cannulation 514 may be positioned between the fastener 500 and the first clamp member opening 496 of the inner hub 494. The cannulated sleeve 512 can be fixed between the attachment plate 440 and the second clamp body 460. An annular channel 516 can be formed between the outer hub 490 and the inner hub 494. The annular channel 516 can have a terminal surface 518. A biasing member 520 can be partially received by the annular channel 516. The operation of the biasing member 520 is similar to that described above with respect to the biasing member 120 (Figs. 4-6).

[0054] In general, the lever 442, first clamp member 446, and second clamp member 448 may function similar to the configurations described above. However, with the clamp assembly 414 as described with respect to Figs. 35-38, the attachment plate 440 can be selectively secured to various power tools including the first power tool 412a and the second power tool 412b. The attachment plate 440 can generally include an attachment plate body 530 that provides an attachment plate mating detail 532. The attachment plate mating detail 532 can generally comprise a central recess 534 and a plurality of receiving portions 536 formed thereon. In the example provided, the central recess 534 can be generally defined by a keyed sidewall 540 defined into the body 530. Similarly, the plurality of receiving portions 536 can be generally defined into the body 530 as oval recesses 544. The keyed sidewall 540 can generally be in the form of a twelve-point star. As can be appreciated, the oval recesses 544 can be configured to selectively receive the protrusions 422a provided on the first mating geometry 420a of the first power tool 412a. Notably, the oval recesses 544 are configured to suitably receive circular shaped protrusions 422a of multiple tools having various diameters. Similarly, the central recess 534 can be configured to cooperatively receive the male protrusion 422b (either the four-point star in one configuration, or the hexagon in another configuration) provided by the second mating geometry 420b. In this regard, the attachment plate 440 may offer a user a variety of distinct mounting configurations for suitably coupling the clamp assembly 414 to a wide range of power tools including the first and second power tools 412a and 412b shown in Fig. 35. It will be further appreciated that the interlocking geometries of the mating detail 532 of the attachment plate 440 and the first and second tool mating details 418a and 418b of the first and second power tools 412a and 412b, respectively may take other shapes.

[0055] In one example of coupling the clamp assembly 414 to the first power tool 412a, a user may initially align the attachment plate mating detail 532 with the first tool mating detail 418a. In the example provided, the user may align the oval recesses 544 defined in the body 530 of the attachment plate 440 for receipt of the complementary circular protrusions 422a extending from the first mating geometry 420a of the output member 416a. As can be appreciated, once the protrusions 422a are selectively received by the oval recesses 544 in the attachment plate 440, the clamp assembly 414 is rotationally fixed with the output member 416a. Next, a user may advance the fastener 500 through the cannulation 514 of the cannulated sleeve 512 and threadably advance the threads 504 into the threaded bore 510a defined in the output member 416a. In the example provided, the head 502 can engage an outer surface 548 of the second clamp member 448. As can be appreciated, in the assembled position (Figs. 36-38), the clamp assembly 414 will be fixed for oscillating motion with the output member 416a of the first power tool 412a. As shown in Figs. 37-38,

the clamp assembly 414 may selectively accept the accessory 14g similar to the clamp assembly 230 (Fig. 30) described above. Therefore, the sequence will not be repeated here.

[0056] With reference now to Figs. 39-43, another comparative clamp arrangement is shown and generally identified at reference numeral 610. The clamp arrangement 610 is shown generally associated with the first power tool 412a (Fig. 40). As will be described in detail herein, the clamp arrangement 610 includes a clamp assembly 614 that is configured to be selectively coupled to the first or second power tools 412a and 412b. Again, it will be appreciated that the clamp assembly 614 may incorporate additional or alternative geometry for mating with other power tools such as those described herein. The clamp assembly 614 is configured to selectively and alternatively retain various accessories such as the seventh accessory 14g (Fig. 43). The clamp assembly 614 is configured to suitably couple with either of the output member 416a provided on the first power tool 412a or the output member 416b provided on the second power tool 412b.

[0057] The clamp assembly 614 generally includes an attachment plate 640 having a first clamp member 646 and a second clamp member 648. The first clamp member 646 is configured to translate relative to the second clamp member 648. The first clamp member 646 can generally include a first clamp member body 674 having an annular flange 676. The clamp assembly 614 is configured to operate similar to the clamp assembly 414 described above but without the incorporation of a lever. In this regard, a user may engage the annular flange 676 and translate the first clamp member body 674 toward the attachment plate 640 against the bias of a biasing member 680 to move the first clamp member 646 from a clamped position (Fig. 43) to an unclamped position (Fig. 44).

[0058] The second clamp member 648 can include a second clamp body 682. The second clamp body 682 can be generally formed similar to the second clamp body 460 described above and will not be repeated here. The attachment plate 640 can generally include an attachment plate body 684 that provides an attachment plate mating detail 686. The attachment plate mating detail 686 can generally comprise a raised annular rim 688 having a central recess 689 and a plurality of receiving portions 690 formed thereon. In the example provided, the raised rim 688 incorporates twelve receiving portions 690 in the form of oval recesses 692. As can be appreciated, the oval recesses 692 can be configured to selectively receive the protrusions 422a provided on the first mating geometry 420a of the first power tool 412a. The central recess 689 can be a keyed sidewall 693 defined into the attachment plate body 684. The keyed sidewall 693 can generally be in the form of a twelve-point star.

[0059] In one example of coupling the clamp assembly 614 to the first power tool 612a, a user may initially align the attachment plate mating detail 686 defined in the body 684 of the attachment plate 640 for receipt of the complementary circular protrusions 422a extending from the first mating geometry 420a of the output member 416a. Once the protrusions 422a are selectively received by the oval recesses 692 in the attachment plate 640, the clamp assembly 614 is rotationally fixed with the output member 616a. Next, a user may advance the fastener 500 through a cannulation 694 of a cannulated sleeve 696 and threadably advance the threads 504 into the threaded bore 510a defined in the output member 416a.

[0060] With reference now to Figs. 44-46, a further attachment assembly is shown and generally identified at reference numeral 710. In general, the attachment assembly 710 generally includes an adapter plate 712, a clamp plate 714, and a fastener 716. As will become appreciated from the following discussion, the attachment assembly 710 may be configured to cooperate with any of the clamping arrangements discussed above for coupling an accessory, such as an accessory 14f to the clamp assembly 720 provided on a power tool 722. Specifically, the attachment assembly 710 may be configured to suitably connect to a second clamp member 726 of the clamp assembly 720 that may additionally include a first clamp member 728.

[0061] The second clamp member 726 can generally include a raised central boss 730 that can define flats 732 and 734 thereon. An opening 736 can also be formed through the second clamp member 726. The first clamp member 728 may define a threaded aperture 740 therein. The adapter plate 712 can generally define an adapter plate body 742 having a central opening 744. The central opening 744 may be defined in part by a radial sidewall 746 having diametrically opposed flats 748. The body 742 can additionally include a plurality of outwardly extending protrusions 750 thereon. The clamp plate 714 can generally include a clamp plate body 754 that defines a central opening 756 therein. The fastener 716 may generally include a threaded shank 758 and a proximal head 760. The head 760 can define a gripping detail 762. The exemplary gripping detail 762 is in the form of a hex recess, however other details may be incorporated.

[0062] In one example of coupling the attachment assembly 710 to the power tool 722, the adapter plate 712 may be located onto the second clamp member 726. In this regard, the opposing flats 748 of the adapter plate 712 can be rotationally aligned with the corresponding flats 732 and 734 provided on the raised central boss 730 of the second clamp member 726. The fastener 716 may then be inserted through the opening 756 of the clamp plate 714 and through an opening 770 in the accessory 14f. The threaded shank 758 can then be threadably advanced into the threaded aperture 740 defined in the first clamp member 728 until the clamp plate 714 clamps the accessory 14f against the adapter plate 712 (Fig. 48). As can be appreciated, the protrusions 750 extending from the adapter plate body 742 can provide additional gripping onto the accessory 14f.

[0063] With reference now to Figs. 47-50, a further

clamp arrangement is shown and generally identified at reference numeral 810. The clamp arrangement 810 is shown generally associated with a first output member 416a (Fig. 49) of the first power tool 412a (Fig. 40). As will be described in detail herein, the clamp arrangement 810 includes a clamp assembly 814 that is configured to be selectively coupled to the first or second power tools 412a and 412b. Again, it will be appreciated that the clamp assembly 814 may incorporate additional or alternative geometry for mating with other power tools such as those described herein. The clamp assembly 814 is configured to selectively and alternatively retain various accessories such as the seventh accessory 14g (Figs. 49-50). In this regard, the clamp assembly 814 is configured to suitably couple with either of the output member 416a provided on the first power tool 412a or the output member 416b provided on the second power tool 412b.

[0064] The clamp assembly 814 generally includes an attachment plate 820 having a first clamp member 822 movably coupled thereto. The first clamp member 822 can generally include a first clamp member body 824 that defines a through bore 826 (Fig. 48), an inset 828, a blind bore 830, and a radial channel 832 (Fig. 49). A fastener 500 can include threads 504 that threadably mate with corresponding threads defined in the output member 416a. The fastener 500 can therefore capture the clamp assembly 814 to the identified power tool.

[0065] The first clamp member 822 is configured to translate relative to a second clamp member 838 as will become appreciated from the following discussion. The second clamp member 838 can include a second clamp body 840. The second clamp body 840 can be generally formed similar to the second clamp body 460 described above and will not be repeated here. The attachment plate 820 can generally include an attachment plate body 844 that provides an attachment plate mating detail 846. The attachment plate mating detail 846 can generally comprise a raised annular rim 848 having a central recess 850 and a plurality of receiving portions 852 formed thereon. In the example provided, the raised rim 848 incorporates twelve receiving portions 852 in the form of oval recesses 854. The oval recesses 854 can be configured to selectively receive the protrusions 422a provided on the first mating geometry 420a of the first power tool 412a. Again, the oval recesses 854 can cooperatively mate with protrusions 422a having various diameters.

[0066] The central recess 850 can be a keyed sidewall 858 defined into the attachment plate body 844. The keyed sidewall 858 can generally be in the form of a twelve-point star. In the example provided, the attachment plate 820 further comprises a stem 860 extending therefrom. The stem 860 can be integrally formed or coupled to the attachment plate 820 and to the second clamp member 838. The stem 860 defines a longitudinal axis 862. A first series of ridges 864 can be formed around the stem 860. The first series of ridges 864 can collectively define a first gripping detail 866. The first gripping detail 866 can therefore be associated with, or fixed relative to, the second clamp member 838.

[0067] With particular reference now to Figs. 48 and 49, additional features of the clamp assembly 814 will be described. A first biasing member 870 can be located generally around the stem 860 and configured for engaging the clamp member body 824 at the inset 828 on one end and the attachment plate 820 on an opposite end. In this regard, the first biasing member 870 can provide a biasing force onto the clamp member body 824 in the direction of the second clamp member 838 or downwardly along the longitudinal axis 862. A button 872 defines a button axis 873 and can be at least partially received into the blind bore 830 of the clamp member body 824 against a bias of a second biasing member 874. The button 872 includes a second series of ridges 878 that collectively define a second gripping detail 880. In the example provided, the first and second series of ridges 864, 878 comprise discontinuous, stepped radial ridges.

[0068] With reference now to Figs. 49 and 50, operation of the clamp assembly 814 according to one example of the present teachings will be described. At the outset, it will be appreciated that the first series of ridges 864 can cooperate with the second series of ridges 878 for locating the button 872 at a desired location along the stem 860. Explained in greater detail, the second biasing member 874 can provide a bias against the button 872 forcing the button 872 in a direction rightward as viewed in Fig. 49 along the button axis 873. In this regard, the second gripping detail 880 of the second series of ridges 878 on the button 872 are caused to mate and therefore cooperatively lock with the first gripping detail 866 of the first series of ridges 864 on the stem 860. When an operator wishes to change the location of the clamp member body 824, the button 872 can be depressed or translated in a direction leftward along the button axis 873 against the bias of the second biasing member 874. In this regard, the first series of ridges 864 and the second series of ridges 878 are caused to disengage whereby the operator can subsequently translate the clamp member body 824 in a direction along the axis 862 of the stem 860.

[0069] Once the desired elevation has been achieved, the operator can release the button 872 causing the respective first and second ridges 864 and 878 to lock. At this time, the user can place the desired accessory between the first and second clamp members 822 and 838. Next, the user can again depress the button 872 allowing the first biasing member 870 to direct the clamp member body 824 in a direction toward the accessory 14g until the accessory 14g is suitably clamped between the first and second clamp members 822 and 838. It will be appreciated that the operator is not required to release the button 872 to lock the clamp member body 824 at a displaced position from the second clamp member 838 while inserting the accessory 14g.

[0070] With reference now to Figs. 51-54, a further clamp arrangement constructed in accordance to another example, also not being part of the present invention, is shown and generally identified at reference numeral

910. The clamp arrangement 910 is shown generally associated with a first output member 416a (Fig. 53) of the first power tool 412a (Fig. 40). As will become understood from the following discussion, the clamp assembly 910 includes a clamp assembly 914 that is configured to be selectively coupled to the first or second power tools 412a and 412b. Again, it will be appreciated that the clamp assembly 914 may incorporate additional or alternative geometry for mating with other power tools such as those described herein. The clamp assembly 914 is configured to selectively and alternatively retain various accessories such as the seventh accessory 14g (Figs. 53-54). In this regard, the clamp assembly 914 is configured to be suitably coupled with either of the output member 416a provided on the first power tool 412a or the output member 416b provided on the second power tool 412b.

[0071] The clamp assembly 914 generally includes an attachment plate 920 having a first clamp member 922 movably coupled thereto. The first clamp member 922 can generally include a first clamp member body 924 that defines a through bore 926 (Fig. 52), an inset 928, a blind bore 930, and a radial channel 932. The first clamp member body 924 includes an annular flange 934. As will be described herein, the annular flange 934 can facilitate a gripping of the user onto the clamp member body 924. A fastener 500' can include threads 504' that threadably mate with corresponding threads defined in the output member 416a. The fastener 500' can therefore capture the clamp assembly 914 to the identified power tool.

[0072] The first clamp member 922 is configured to translate relative to a second clamp member 938 as will become appreciated from the following discussion. The second clamp member 938 can include a second clamp member body 940. The second clamp body 940 can be generally formed similar to the second clamp body 460 described above and will not be repeated. The attachment plate 920 can generally include an attachment plate body 944 that provides an attachment plate mating detail 946. The attachment plate mating detail 946 can generally comprise a raised annular rim 948 having a central recess 950 and a plurality of receiving portions 952 formed thereon. In the example shown, the raised rim 948 incorporates twelve receiving portions 952 in the form of oval recesses 954. The oval recesses 954 can be configured to selectively receive the protrusions 422a provided on the first mating geometry 420a of the first power tool 412a. Again, the oval recesses 954 can cooperatively mate with protrusions 422a having various diameters.

[0073] The central recess 950 can be a keyed sidewall 958 defined into the attachment plate body 944. The keyed sidewall 958 can generally be in the form of a twelve-point star. In the example provided, the attachment plate 920 further comprises a stem 960 extending therefrom. The stem 960 is shown separately formed from the attachment plate 920 and to the second clamp member 938. However, it is contemplated that the stem 960 can be integrally formed with the attachment plate 920. The stem 960 defines a longitudinal axis 962. A first series of threads 964 can be formed around the stem 960. The first series of threads 964 can collectively define a first gripping detail 966. The first gripping detail 966 can therefore be associated with, or fixed relative to, the second clamp member 938.

[0074] With particular reference now to Fig. 52, additional features of the clamp assembly 914 will be described. A first biasing member 970 can be located generally around the stem 960 and configured for engaging the clamp member body 924 at the inset 928 on one end and the attachment plate 920 on an opposite end. In this regard, the first biasing member 970 can provide a biasing force onto the clamp member body 924 and the direction of the second clamp member 938 or downwardly along the longitudinal axis 962. A button 972 defines a button axis 973 and can be at least partially received into the blind bore 930 of the clamp member body 924 against a bias of a second biasing member 974. The button 972 includes a second series of threads 978 that collectively define a second gripping detail 980.

[0075] With particular reference now to Figs. 53 and 54, operation of the clamp assembly 914 will be described. At the outset, it will be appreciated that the first series of threads 964 can threadably mate with the second series of threads 978 for locating the button 972 at the desired location along the stem 960. Explained in greater detail, the second biasing member 974 can provide a bias against the button 972 forcing the button 972 in a direction rightward as viewed in Fig. 53 along the button axis 973. In this regard, the second gripping detail 980 of the second series of threads 978 are caused to mate and therefore cooperatively lock with the first gripping detail 966 of the first series of threads 964 on the stem 960. When an operator wishes to change the location of the clamp member body 924, the button 972 can be translated in a direction leftward (as viewed in Fig. 52) along the button axis 973 against the bias of the second biasing member 974. In this regard, the first series of threads 964 and the second series of threads 978 are caused to disengage whereby the operator can subsequently translate the clamp member body 924 in a direction along the axis 962 of the stem 960. Once the desired elevation has been achieved, the operator can release the button 972 causing the respective first and second series of threads 964 and 978 to lock. Alternatively, an operator may rotate the first clamp member body 924 in a direction generally around the longitudinal axis 962 causing the first clamp member 922 to threadably advance along the first series of threads 964 to a desired position.

[0076] At this time, the user can place the desired accessory between the first and second clamp members 922 and 938. Next, the user can again depress the button 972 allowing the first biasing member 970 to direct the clamp member body 924 in a direction toward the accessory 14g until the accessory 14g is suitably clamped between the first and second clamp members 822 and 838.

Again, a user may alternatively rotate the first clamp member body 924 to move the first clamp member 922 into a position that suitably clamps the accessory 14g between the first and second clamp members 922 and 938, respectively. Notably, in the configuration of the clamp assembly 914, a user can optionally further rotate the clamp member body 924 in a direction around the axis 962 causing the first and second series of thread portions 964 and 978 to engage whereby the user can further translate the first clamp member body 924 toward the second clamp member 938. Such a configuration may be particularly advantageous for aggressive applications where it may be desired to provide an increased clamping force onto an accessory.

[0077] With reference now to Figs. 55 and 56, the clamp arrangement 910 is shown operatively clamping an accessory 14b in the form of a sanding platen. The accessory 14b can be suitably clamped between the first and second clamp members 922 and 938. Again, the first clamp member body 924 can be rotated around the stem 960 to provide a tighter clamping force onto the accessory 14b.

[0078] With reference now to Figs. 57-59 and 61-70, a clamp arrangement constructed in accordance to an embodiment of the present invention is shown and generally identified at reference numeral 1010. The clamp arrangement 1010 can be selectively and alternatively coupled to various power tools such as the first or second power tools 412a and 412b described above (Fig. 35). The clamp arrangement 1010 generally includes a clamp assembly 1014 that may be configured to selectively and alternatively retain various accessories such as the seventh accessory 14g (Fig. 43).

[0079] Referring to Fig. 58, the clamp assembly 1014 generally includes a first clamp member 1020, a second clamp member 1022, an attachment plate 1024, a stem 1030, a cam body 1032, a biasing member 1034, and a fastener 1040. As will be appreciated from the following discussion, the first clamp member 1020 is configured to translate along an axis 1042 of the fastener 1040 relative to the second clamp member 1022 upon rotation of the first clamp member 1020. In this regard, rotation of the first clamp member 1020 in a first direction can cause the first clamp member 1020 to translate toward the second clamp member 1022 into a closed or clamped position (Figs. 59 and 68). Similarly, rotation of the first clamp member 1020 in a second, opposite direction can cause the first clamp member 1020 to translate away from the second clamp member 1022 into a fully open or unclamped position (Figs. 57 and 70).

[0080] With particular reference to Figs. 58 and 62, the first clamp member 1020 can include a first clamp member body 1050 that generally includes an outer ribbed gripping surface 1052, an upper recess 1053 (Fig. 68), a lower recess 1054 (Fig. 62), a central opening 1056, a cam follower body 1060, and a clamping surface 1062. The gripping surface 1052 can further include a double-ended arrow identifier 1066 that points in directions generally transverse to the axis 1042 to indicate to the user that the first clamp member body 1050 is configured to be rotated around the axis 1042. The lower recess 1054 can be sized to receive the cam body 1032 (see also Figs. 68-70). The lower recess 1054 can also be sized to at least partially receive portions of the second clamp member 1022 in the closed or clamped position (Fig. 68). The upper recess 1053 can receive a portion of the biasing member 1034. In one configuration, the biasing member can be mounted for compression between the attachment plate 1024 and a terminal end 1068 of the upper recess 1053.

[0081] The cam follower body 1060 can generally include a plurality of cam pawls 1070. As will be described below, the cam pawls 1070 of the cam follower body 1060 are configured to slidably negotiate along features of the cam body 1032 to influence the first clamp member body 1050, and therefore the first clamp member 1020, to translate along the axis 1042 (Fig. 57) relative to the second clamp member 1022.

[0082] With particular reference now to Figs. 58, 61, and 63, the cam body 1032 will be described in greater detail. The cam body 1032 generally includes a plurality of cam ramps 1074 that are positioned between respective cam valleys and cam plateaus 1076 and 1078. Each of the cam plateaus 1078 can further include a cam stop 1080 formed thereon. The cam body 1032 can further include an opening 1082 therein. The cam body 1032 can further include a planar mounting surface 1084 (Fig. 66) that, together with the opening 1082, is configured to provide a keyway for non-rotatably receiving the stem 1030. As can be appreciated, the cam pawls 1070 of the cam follower body 1060 are configured to slidably negotiate around the respective cam ramps 1074 between the cam plateaus 1078 (corresponding to the clamp assembly 1014 being in an open position Fig. 70) and a position on or near the cam valleys 1076 (corresponding to the clamp assembly 1014 being in a closed or clamped position, Fig. 68). It will be appreciated that while three cam pawls 1070 and cam ramps 1074 have been incorporated on the clamp assembly 1014, other configurations are contemplated.

[0083] Referring now to Figs. 58 and 68-70, the stem 130 will be further described. The stem 130 generally includes a cylindrical body 1090 that defines a throughbore 1092. The stem 1030 further includes a flat 1094 (Fig. 58) formed on the body 1090. The flat 1094 incorporates a ledge 1096 at a terminal end thereof. The stem 1030 further includes a distal seat 1100 and a proximal seat 1102. The second clamp member 1022 can be fixedly and non-rotatably secured to the stem 1030 at the distal seat 1100. Similarly, the attachment plate 1024 can be fixedly and non-rotatably secured to the stem 1030 at the proximal seat 1102. The planar mounting surface 1084 (Fig. 66) of the cam body 1032 can locate against the flat 1094 such that the cam body 1032 is non-rotatably fixed to the stem 1030 at the ledge 1096. It is appreciated that once assembled, the cam body 1032 is further pre-

cluded from translating along the stem 1030.

[0084] The second clamp member 1022 can include a second clamp member body 1110 having a plurality of mounting features 1112 extending therefrom. The mounting features 1112 can be generally in the form of male conical protrusions such as the male conical protrusions 258 described in detail above with respect to Fig. 31. According to one example, the male conical protrusions of the mounting features 1112 can be configured to engage apertures of an accessory. By way of example, the mounting features 1112 can be configured to engage apertures of the sixth accessory 14f at a position intermediate the terminal end of the tips and a second clamp surface 1114 on the second clamp member 1022 such as described above with respect to Fig. 30.

[0085] With particular reference now to Fig. 59, the attachment plate 1024 can generally include an attachment plate body 1140 that provides an attachment plate mating detail 1142. The attachment plate mating detail 1142 can generally comprise an annular rim 1144 having a central recess 1146 and a plurality of receiving portions 1148 formed thereon. In the example provided, the rim 1144 incorporates twelve receiving portions 1148 in the form of oblong recesses that extend into and connect with the central recess 1146. As can be appreciated, the oblong recesses can be configured to selectively receive protrusions provided on a first power tool (such as the first power tool 412a, Fig. 35). Alternatively, the central recess 1146 can be configured to receive the corresponding mating geometry of a second power tool (such as the second power tool 412b, Fig. 35).

[0086] In one example of coupling the clamp arrangement 1010 to a first power tool (such as the first power tool 412a, Fig. 35), a user may initially align the attachment plate mating detail 1142 defined in the attachment plate body 1140 for receipt of the complementary circular protrusions (such as protrusions 422a, Fig. 35). Once the protrusions of the power tool are selectively received by the receiving portions 1148 in the attachment plate 1140, the clamp assembly 1014 is rotationally fixed with the output member of the tool. Next, a user may advance the fastener 1040 through the throughbore 1092 defined through the stem 1030. The fastener 1040 can be fixedly coupled to the output member of the tool such as by threads formed on a distal end of the fastener 1040 (not specifically shown). Fig. 60 illustrates a clamping arrangement 1010'. The clamping arrangement 1010' is constructed similar to the clamping arrangement 1010 described above except an attachment plate 1024' provides a mating detail 1142' that includes a plurality of receiving portions 1148' that do not intersect with a central recess 1146'. The mating detail 1142' may be constructed similar to the mating detail 686 described above and shown in Fig. 40.

[0087] With specific reference now to Figs. 68, 70, operation of the clamp assembly 1014 according to one example of the present disclosure will now be described. As can be appreciated, the biasing member 1034 normally biases the first clamp member 1020 toward and into engagement with the second clamp member 1022. To move the first clamp member 1020 from the closed position (Fig. 68) toward an open position (Fig. 70), a user can rotate the first clamp member 1020 in a first direction (counter-clockwise as viewed in Fig. 58). Rotation of the first clamp member 1020 in the first direction will cause the respective cam pawls 1070 to slidably negotiate from a position generally on or adjacent to the cam valleys 1076 on the cam body 1032 along the cam ramps 1074 (Fig. 61). As the cam body 1032 is fixed relative to the stem 1030, the cam pawls 1070 ride up the respective cam ramps 1074 thereby causing the first clamp member 1020 to move away from the second clamp member 1022 (or in a direction up as viewed from Fig. 68 to Fig. 78). The first clamp member 1020 can continue to rotate until the cam pawls 1070 locate onto the respective cam plateaus 1078 (Fig. 61) on the cam body 1032. Engagement of the respective cam pawls 1070 with the cam stops 1080 will preclude further rotation of the first clamp member 1020 conveying to a user that the first clamp member body 1050 has reached a fully open position (Fig. 70). With the clamp assembly 1014 in the open position, a user may insert or replace an accessory. In this regard, once the desired accessory has been located between the first and second clamp members 1020 and 1022, respectively, a user can rotate the first clamp member body 1050 in a second opposite direction (clockwise as viewed in Fig. 58). Rotation of the first clamp member body 1050 in the second direction will cause the cam pawls 1070 to ride down the respective cam ramps 1074 to a position that allows an accessory to be clamped between the mounting features 1112 and the clamping surface 1062 of the first clamp member 1020. Again, the biasing member 1034 will tend to facilitate and encourage movement of the cam pawls 1070 down the cam ramps 1074 and into a clamping position.

[0088] With reference now to Figs. 71 and 72, a clamp arrangement constructed in accordance to another example of the present disclosure is shown and generally identified at reference numeral 1210. The clamp arrangement 1210 can be selectively and alternatively coupled to various power tools such as the first or second power tools 412a and 412b described above (Fig. 35). The clamp arrangement 1210 generally includes a clamp assembly 1214 that may be configured to selectively and alternatively retain various accessories such as described herein. Unless otherwise described, the clamp assembly 1214 may be constructed similar to the clamp assembly 1014 described above. Therefore, the description and operation of the clamp assembly 1214 will not be repeated here.

[0089] The clamp arrangement 1210 generally includes an attachment plate 1224 and a floating adapter plate 1226. As will be described herein, the floating adapter plate 1226 can be optionally incorporated between the attachment plate 1224 and an identified tool when it is desired to rotate the orientation of the clamp assembly

1214 relative to the tool. The attachment plate 1224 can generally include an attachment plate body 1230 that provides an attachment plate mating detail 1232. The attachment plate mating detail 1232 can generally comprise a central recess 1234 and a plurality of receiving portions 1238 arranged therearound. The central recess 1234 can be further defined by a keyed sidewall 1240 defined into the body 1230. The keyed sidewall 1240 can generally be in the form of a twelve-point star. The plurality of receiving portions 1238 can be generally defined into the body 1230 as oval recesses 1242. The oval recesses 1242 can be configured to selectively receive the protrusions 422a (Fig. 35) provided on the first mating geometry 420a of the first power tool 412a. Alternatively, and as will be described below, the oval recesses 1242 can be configured to receive protrusions 1250 (Fig. 72) extending from the floating adapter plate 1226.

[0090] The floating adapter plate 1226 can generally include a floating adapter plate body 1260 that provides an upper mating detail 1262 (Fig. 71) and a lower mating detail 1264 (Fig. 72). The upper mating detail 1262 can generally comprise a central recess 1274 and a plurality of receiving portions 1276. In the example provided, the central recess 1274 can be generally defined by a keyed sidewall 1280 defined into the body 1260. The keyed sidewall 1280 can be generally in the form of a twelve-point star. The plurality of receiving portions 1276 can be generally defined into the body 1260 as oval recesses 1282. The lower mating surface 1264 includes the protrusions 1250. Of note, when the floating adapter plate 1226 is assembled between the adapter plate 1224 and the identified power tool, the protrusions 1250 on the floating adapter plate 1226 are received into the receiving portions 1238. The orientation of the receiving portions 1276 on the floating attachment plate 1226 are rotated relative to the receiving portions 1238 on the attachment plate 1224. As a result, the orientation of the clamp member 1214 (and the resulting accessory) can be rotated around a central axis 1290 relative to the power tool a predetermined amount. In the example provided, the receiving portions 1238 of the attachment plate 1230 are rotatably offset about fifteen degrees relative to the receiving portions 1276 in the floating adapter plate 1226. Other configurations are contemplated.

[0091] With reference now to FIGS. 73 and 74, a clamp arrangement constructed in accordance to another example of the present disclosure is shown and generally identified at reference numeral 1310. The clamp arrangement 1310 can be selectively and alternatively coupled to various power tools such as the first or second power tools 412a and 412b described above (Fig. 35). The clamp arrangement 1310 generally includes a clamp assembly 1314 that may be configured to selectively and alternatively retain various accessories such as described herein. Unless otherwise described, the clamp assembly 1314 may be constructed to the clamp assembly 1014 described above. Therefore, the description and operation of the clamp assembly 1314 will not be repeated here.

[0092] The clamp arrangement 1310 generally includes an attachment plate 1324 and a floating adapter plate 1326. As will be described herein, the floating adapter plate 1326 can be optionally incorporated between the attachment plate 1324 and an identified tool when it is desirable to provide a different mating detail. The attachment plate 1324 can generally include an attachment plate body 1330 that provides an attachment plate mating detail 1332. The attachment plate mating detail 1332 can generally comprise an elongated slot 1334 and a pair of female arcuate slots 1336 formed into the body 1330. In one example, the configuration of the mating detail 1332 can cooperatively mate with the first mating detail 420a (Fig. 35) of the first power tool 412a. Other configurations are contemplated. When it may be desirable to mate with the second mating geometry 420b (Fig. 35) of the second power tool 412b, the floating adapter plate 1326 may be positioned between the attachment plate 1324 and the second power tool 412b.

[0093] The floating adapter plate 1326 can generally include a floating adapter plate body 1360 that provides an upper mating detail 1362 (Fig. 73) and a lower mating detail 1364 (Fig. 74). The upper mating detail 1362 can generally comprise a central recess 1374 that defines a keyed sidewall 1380 defined into the body 1360. The keyed sidewall 1380 can generally be in the form of a twelve-point star. The upper mating detail 1362 can be configured to selectively mate with the second mating geometry 420b of the second power tool 412b (Fig. 35). The lower mating surface 1364 includes male arcuate protrusions 1390 that are configured to be selectively received by the female arcuate slots 1336 (Fig. 73) provided in the adapter plate 1324. The interaction of the male arcuate protrusions 1390 on the floating adapter plate 1326 with the female arcuate slots 1336 on the adapter 1324 non-rotatably fixes the attachment plate 1324 to the floating adapter plate 1326.

[0094] Referring now to FIG. 75, an attachment plate constructed in accordance to additional features of the present disclosure is shown and generally identified at reference numeral 1424. The attachment plate 1424 can be used in place of any of the attachment plates described above. The attachment plate 1424 can generally include an attachment plate body 1440 that provides an attachment plate mating detail 1442. The attachment plate mating detail 1442 can generally comprise a plurality of generally pie-shaped protrusions 1444 that cooperate to form a central recess 1446. Each of the pie-shaped protrusions 1444 includes a pair of converging flats 1445. The flats 1445 can be used to engage and rotatably fix to a corresponding structure extending from a given power tool. A plurality of grooves 1450 are defined on the attachment plate body 1440 between adjacent pie-shaped protrusions 1444. The protrusions 1444, the flats 1445, the central recess 1446 and the grooves 1450 can individually or in combination interface with various attachment details provided on various power tools such

as those disclosed herein.

[0095] Referring now to FIG. 76, an attachment plate constructed in accordance with additional features of the present disclosure is shown and generally identified at reference numeral 1456. The attachment plate 1456 can be substituted for any of the attachment plates described above. The attachment plate 1456 can generally include an attachment plate body 1458 that provides an attachment plate mating detail 1462 and a central aperture 1474. The attachment plate mating detail 1462 can generally comprise a raised annular rim portion 1460 having a plurality of radially spaced arcuate recesses 1468a-d formed therein which are separated by a pair of elongated radially extending grooves 1464 and 1466. In the example provided, the grooves 1464 and 1466 extend perpendicular to each other and join a central recess area 1470 immediately surrounding the aperture 1474. In this embodiment of the attachment plate 1456 the outer radial ends of the grooves 1464 and 1466 are closed and therefore do not extend entirely to the outer periphery of the attachment plate body 1458. The raised rim 1460, the arcuate recesses 1468, and the grooves 1464, 1466 can individually or in combination provide a torque transferring interface with various attachment details provided on various power tools such as those disclosed herein.

[0096] Referring now to FIG. 77, an attachment plate constructed in accordance with additional features of the present disclosure is shown and generally identified at reference numeral 1550. The attachment plate 1550 can be substituted for any of the attachment plates described above. The attachment plate 1550 can generally include an attachment plate body 1540 that provides an attachment plate mating detail 1562 similar to the mating detail 1462 of the attachment plate 1456 shown in Fig. 76. In particular, the attachment plate mating detail 1562 can generally comprise a raised annular rim portion 1560 having a plurality of radially spaced arcuate recesses 1568a-d formed therein which are separated by a pair of elongated radially extending grooves 1564 and 1566. The grooves 1564 and 15666 are arranged perpendicular to each other and extend from a central recess area 1570 surrounding the central aperture 1574. In this embodiment of the attachment plate 1550, the radial grooves 1564 and 1566 extend to the outer periphery of the attachment plate body 1540. The raised rim portion 1560, the receiving portions 1568a-d, and the radial grooves 1564, 1566 can individually or in combination interface with various attachment details provided on various power tools such as those disclosed herein.

[0097] In this regard, the attachment plate mating detail 1562 (as well as the mating detail of the various other attachment plates disclosed herein) is suitable for engaging not only the tool mating details 418a and 418b (Fig. 35) described above, but other tool mating details provided by other manufacturers including but not limited to Fein, Sears (Craftsman), Rockwell, Dremel, Bosch, Milwaukee, Master Mechanic, and Ridgid.

[0098] With reference now to Fig. 78, a clamp arrangement constructed in accordance to another example of the present disclosure is shown and generally identified at reference numeral 1610. The clamp arrangement 1610 is similar to the clamp arrangement 1010 shown in Fig. 58 and generally includes a first clamp member 1620, and a second clamp member 1622. The first clamp member 1620 generally includes an outer ribbed gripping surface 1652 for enabling a user to rotate the first clamp member 1620 against the bias of spring 1634 to raise the first clamping member 1620 relative to the second clamping member 1622 into the open position shown in Fig. 78. A flange 1660 is provided adjacent the lower end of the first clamping member 1620 to prevent the user from potentially pinching his fingers when the clamping arrangement 1610 is closed.

[0099] The second clamp member 1622 can include a plurality of mounting features 1612 extending therefrom. The mounting features 1612 can preferably be in the form of male tapered conical protrusions configured and arranged as described above in connection with Fig. 31. By way of example, the mounting features 1612 can be configured to engage apertures of the sixth accessory 14f at a position intermediate the terminal end of the tips and a second clamp surface 1614 on the second clamp member 1622 such as described above with respect to Fig. 30.

[0100] The foregoing description of the embodiments has been provided for purposes of illustration and description. It is not intended to be exhaustive. Individual elements or features of a particular embodiment are generally not limited to that particular embodiment, but, where applicable, are interchangeable and can be used in a selected embodiment, even if not specifically shown or described.

Claims

1. A power tool (12) and detachable accessory (14b) system,

   a) whereby the power tool (12) may impart oscillating motion to the accessory (14b) when the accessory (14b) is attached to the power tool (12), the system comprising:
   b) the power tool (12) with a tool body (18, 430b), which tool body (18, 430b) has an output member (416b) depending therefrom, and which output member (416b) defines an oscillation motion axis (1042);
   c) first (1020) and second (1022) clamp members, which first and second clamp members (1020, 1022) are coupled to the output member (416b) and oscillate therewith about the oscillation motion axis (1042), the first clamp member (1020) being configured to translate along the oscillation motion axis (1042) relative to the second clamp member (1022) upon rotation of the

first clamp member (1020) between an open position and a closed position, such that, in its open position, the first clamp member has a first rotation position relative to and translation position along the axis (1042) with respect to the second clamp member and in the closed position, the first clamp member has a second rotation position relative to and translation position along the axis (1042) with respect to the second clamp member;

d) wherein the tool accessory (14b) may be detachably coupled to the output member (416b) via the first and second clamp members (1020, 1022), the accessory (14b) comprising an attachment portion (348) for engagement with the first and second clamp members (1020, 1022), and an axially offset working portion (346), such that when the accessory (14b) is coupled to the output member (416b), the working portion (346) of the accessory (14b) is axially displaced along the oscillation motion axis (1042) relative to the attachment portion (348) of the accessory (14b);

e) the system including a biasing member (1034),

f) wherein the biasing member (1034) acts on the first clamp member (1020) with the first clamp member (1020) being influenced by a cam mechanism (1032, 1060, 1070), such that when the first clamp member (1020) is in the closed position, the biasing member (1034) and the cam mechanism (1032, 1060, 1070) act to retain the first clamp member (1020) in engagement with the attachment portion (348) of the accessory (14b) held between the first clamp member (1020) and the second clamp member (1022) such that the accessory (14b) cannot be detached from the first and second clamp members (1020, 1022) unless and until the cam mechanism (1032, 1060, 1070) is moved as the first clamp member (1020) is rotated by a user, against the force of the biasing member (1034) to release the first clamp member (1020) into its open position, thereby permitting a user of the system to detach the accessory (14b) from the power tool (12);

g) wherein the second clamp member (1022) has a plurality of mounting features (1112) for engagement with corresponding features (150) formed on the attachment portion (348) of the accessory (14b) such that, when the accessory (14b) is mounted to the power tool (12), the respective mounting features (150, 1112) of both the second clamp member (1022) and the attachment part (348) of the accessory (14b) may be aligned in any one of a plurality of angular positions about the tool body output (1010);

h) and wherein the accessory (14b) is clamped between the first and second clamp members (1020, 1022).

Patentansprüche

1. System aus Elektrowerkzeug (12) und abnehmbarem Zubehör (14b),

a) wobei das Elektrowerkzeug (12) eine oszillierende Bewegung auf das Zubehör (14b) übertragen kann, wenn das Zubehör (14b) an dem Elektrowerkzeug (12) angebracht ist, wobei das System Folgendes umfasst:

b) das Elektrowerkzeug (12) mit einem Werkzeugkörper (18, 430b), wobei der Werkzeugkörper (18, 430b) ein davon abhängiges Abtriebselement (416b) aufweist, und wobei das Abtriebselement (416b) eine Oszillationsbewegungsachse (1042) definiert;

c) ein erstes (1020) und ein zweites (1022) Klemmelement, wobei das erste und das zweite Klemmelement (1020, 1022) mit dem Abtriebselement (416b) gekoppelt sind und mit diesem um die Schwingungsbewegungsachse (1042) schwingen, wobei das erste Klemmelement (1020) so konfiguriert ist, dass es sich bei der Drehung des ersten Klemmelements (1020) zwischen einer offenen und einer geschlossenen Position entlang der Schwingungsbewegungsachse (1042) relativ zum zweiten Klemmelement (1022) verschiebt, derart, dass das erste Klemmelement in seiner offenen Position eine erste Drehposition relativ zu und eine Translationsposition entlang der Achse (1042) in Bezug auf das zweite Klemmelement aufweist, und dass das erste Klemmelement in der geschlossenen Position eine zweite Drehposition relativ zu und eine Translationsposition entlang der Achse (1042) in Bezug auf das zweite Klemmelement aufweist;

d) wobei das Werkzeugzubehör (14b) über das erste und zweite Klemmelement (1020, 1022) lösbar mit dem Abtriebselement (416b) gekoppelt werden kann, wobei das Zubehör (14b) einen Befestigungsabschnitt (348) zum Eingriff mit dem ersten und zweiten Klemmelement (1020, 1022) aufweist, und einen axial versetzten Arbeitsabschnitt (346), so dass, wenn das Zubehör (14b) mit dem Abtriebselement (416b) gekoppelt wird, der Arbeitsabschnitt (346) des Zubehörs (14b) axial entlang der Schwingbewegungsachse (1042) relativ zum Befestigungsabschnitt (348) des Zubehörs (14b) verschoben wird;

e) das System einschließlich eines Vorspannelements (1034),

f) wobei das Vorspannelement (1034) auf das

erste Klemmelement (1020) wirkt, wobei das erste Klemmelement (1020) durch einen Nockenmechanismus (1032, 1060, 1070) beeinflusst wird, so dass, wenn sich das erste Klemmelement (1020) in der geschlossenen Position befindet, das Vorspannelement (1034) und der Nockenmechanismus (1032, 1060), 1070) wirken, um das erste Klemmelement (1020) in Eingriff mit dem Befestigungsabschnitt (348) des Zubehörs (14b) zu halten, das zwischen dem ersten Klemmelement (1020) und dem zweiten Klemmelement (1022) gehalten wird, so dass das Zubehör (14b) nicht von dem ersten und zweiten Klemmelement (1020, 1022) gelöst werden kann, sofern und solange der Nockenmechanismus (1032, 1060, 1070) bewegt wird, wenn das erste Klemmelement (1020) von einem Benutzer gegen die Kraft des Vorspannelements (1034) gedreht wird, um das erste Klemmelement (1020) in seine offene Position zu lösen, wodurch es einem Benutzer des Systems ermöglicht wird, das Zubehör (14b) von dem Motorwerkzeug (12) zu lösen;

g) wobei das zweite Klemmelement (1022) eine Vielzahl von Montagevorrichtungen (1112) zum Eingriff mit entsprechenden Vorrichtungen (150) aufweist, die an dem Befestigungsabschnitt (348) des Zubehörs (14b) ausgebildet sind, so dass, wenn das Zubehör (14b) an dem Elektrowerkzeug (12) befestigt ist, die jeweiligen Montagevorrichtungen (150, 1112) sowohl des zweiten Klemmelements (1022) als auch des Befestigungsteils (348) des Zubehörs (14b) in einer beliebigen von einer Vielzahl von Winkelpositionen um den Werkzeugkörperausgang (1010) herum ausgerichtet werden können;

h) und wobei das Zubehör (14b) zwischen dem ersten und zweiten Klemmelement (1020, 1022) eingeklemmt ist.

Revendications

1. Système d'outil électrique (12) et d'accessoire détachable (14b),

a) selon lequel l'outil électrique (12) peut transmettre un mouvement d'oscillation à l'accessoire (14b) lorsque l'accessoire (14b) est attaché à l'outil électrique (12), le système comprenant :

b) l'outil électrique (12) avec un corps d'outil (18, 430b), lequel corps d'outil (18, 430b) présente un élément de sortie (416b) dépendant de celui-ci, et lequel élément de sortie (416b) définit un axe de mouvement d'oscillation (1042) ;

c) des premier (1020) et second (1022) éléments de serrage, lesquels premier et second éléments de serrage (1020, 1022) sont couplés à l'élément de sortie (416b) et oscillent avec celui-ci autour de l'axe de mouvement d'oscillation (1042), le premier élément de serrage (1020) étant configuré pour se déplacer en translation le long de l'axe de mouvement d'oscillation (1042) par rapport au second élément de serrage (1022) lors de la rotation du premier élément de serrage (1020) entre une position ouverte et une position fermée, de sorte que, dans sa position ouverte, le premier élément de serrage présente une première position de rotation par rapport à et une position de translation le long de l'axe (1042) par rapport au second élément de serrage et dans la position fermée, le premier élément de serrage présente une seconde position de rotation par rapport à et une position de translation le long de l'axe (1042) par rapport au second élément de serrage ;

d) dans lequel l'accessoire d'outil (14b) peut être couplé de manière détachable à l'élément de sortie (416b) par l'intermédiaire des premier et second éléments de serrage (1020, 1022), l'accessoire (14b) comprenant une partie d'attache (348) pour la mise en prise avec les premier et second éléments de serrage (1020, 1022), et une partie de fonctionnement (346) décalée axialement, de sorte que, lorsque l'accessoire (14b) est couplé à l'élément de sortie (416b), la partie de fonctionnement (346) de l'accessoire (14b) est déplacée axialement le long de l'axe de mouvement d'oscillation (1042) par rapport à la partie d'attache (348) de l'accessoire (14b) ;

e) le système incluant un élément de sollicitation (1034),

f) dans lequel l'élément de sollicitation (1034) agit sur le premier élément de serrage (1020) avec le premier élément de serrage (1020) étant influencé par un mécanisme de came (1032, 1060, 1070), de sorte que, lorsque le premier élément de serrage (1020) est dans la position fermée, l'élément de sollicitation (1034) et le mécanisme de came (1032, 1060, 1070) agissent pour retenir le premier élément de serrage (1020) en prise avec la partie d'attache (348) de l'accessoire (14b) maintenue entre le premier élément de serrage (1020) et le second élément de serrage (1022) de sorte que l'accessoire (14b) ne puisse pas être détaché des premier et second éléments de serrage (1020, 1022) à moins que et jusqu'à ce que le mécanisme de came (1032, 1060, 1070) soit déplacé tandis que le premier élément de serrage (1020) est pivoté par un utilisateur, contre la force de l'élément de sollicitation (1034) pour libérer le premier élément de serrage (1020) dans sa position ouverte, permettant ainsi à un utilisateur du système de détacher l'accessoire (14b) de l'outil électrique (12) ;

g) dans lequel le second élément de serrage (1022) présente une pluralité d'équipements de montage (1112) pour la mise en prise avec des équipements correspondants (150) formés sur la partie d'attache (348) de l'accessoire (14b) de sorte que, lorsque l'accessoire (14b) est monté sur l'outil électrique (12), les équipements de montage respectifs (150, 1112) du second élément de serrage (1022) et de la partie d'attache (348) de l'accessoire (14b) peuvent être alignés dans l'une quelconque d'une pluralité de positions angulaires autour de la sortie de corps d'outil (1010) ;

h) et dans lequel l'accessoire (14b) est serré entre les premier et second éléments de serrage (1020, 1022).

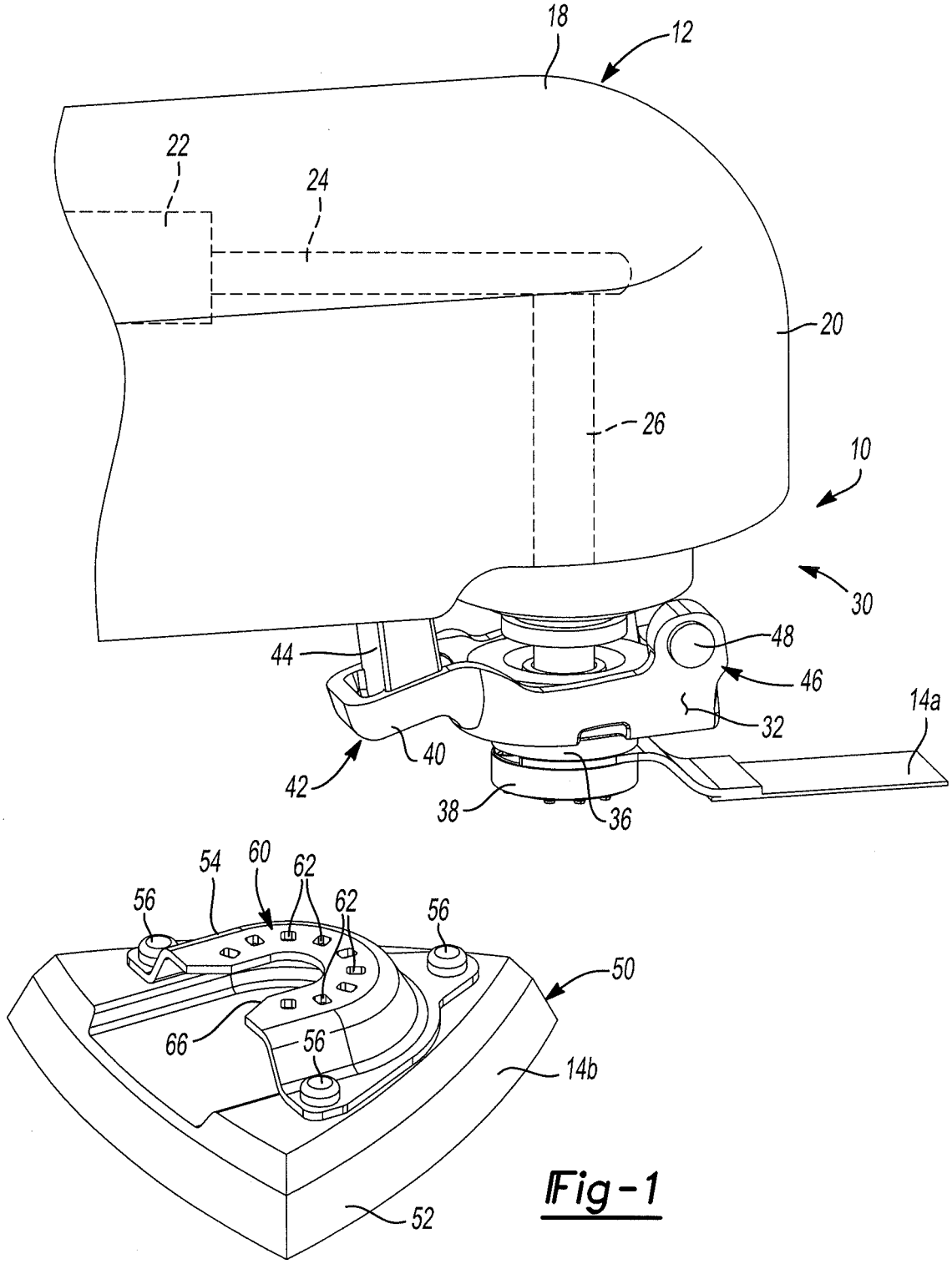
18
12
22
24
20
26
10
30
48
44
46
14a
32
40
42
38
36
54
60
62
62
56
56
50
66
56
14b
52

Fig-1

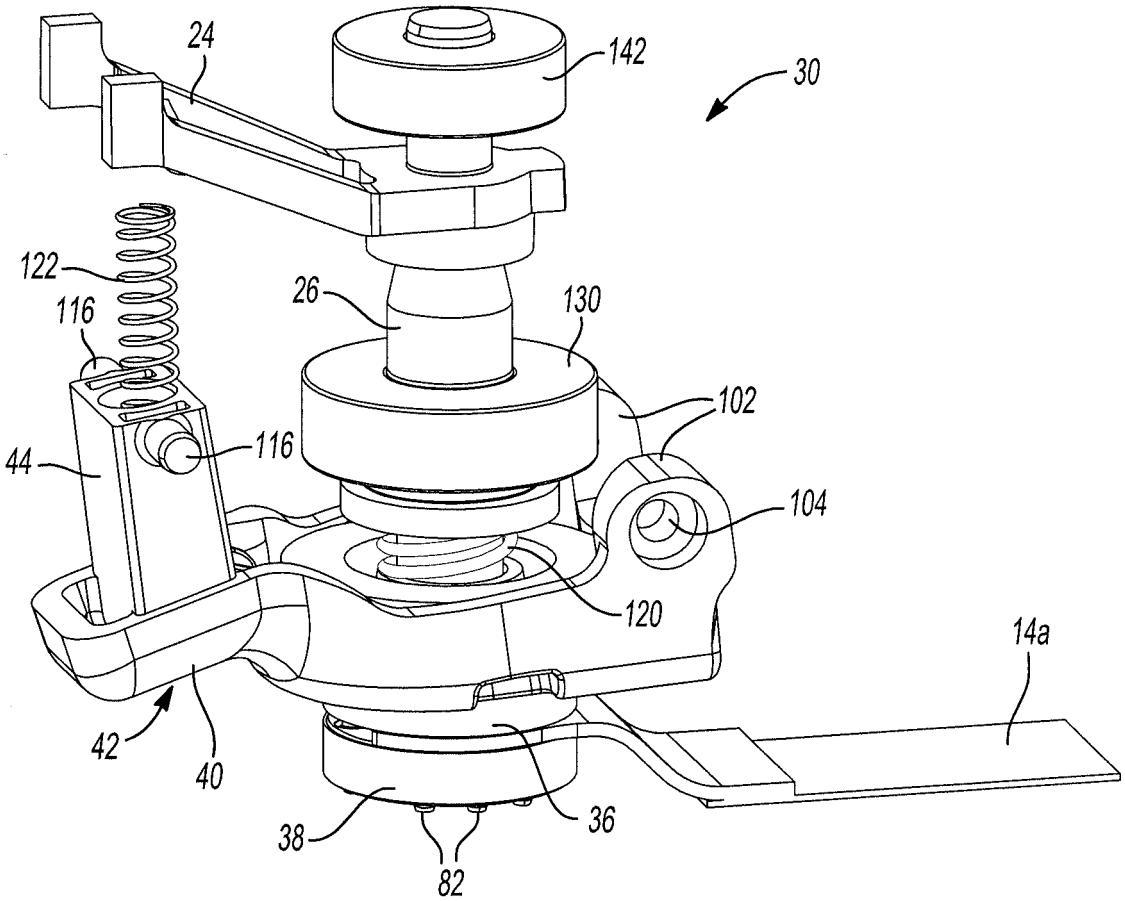

Fig-2

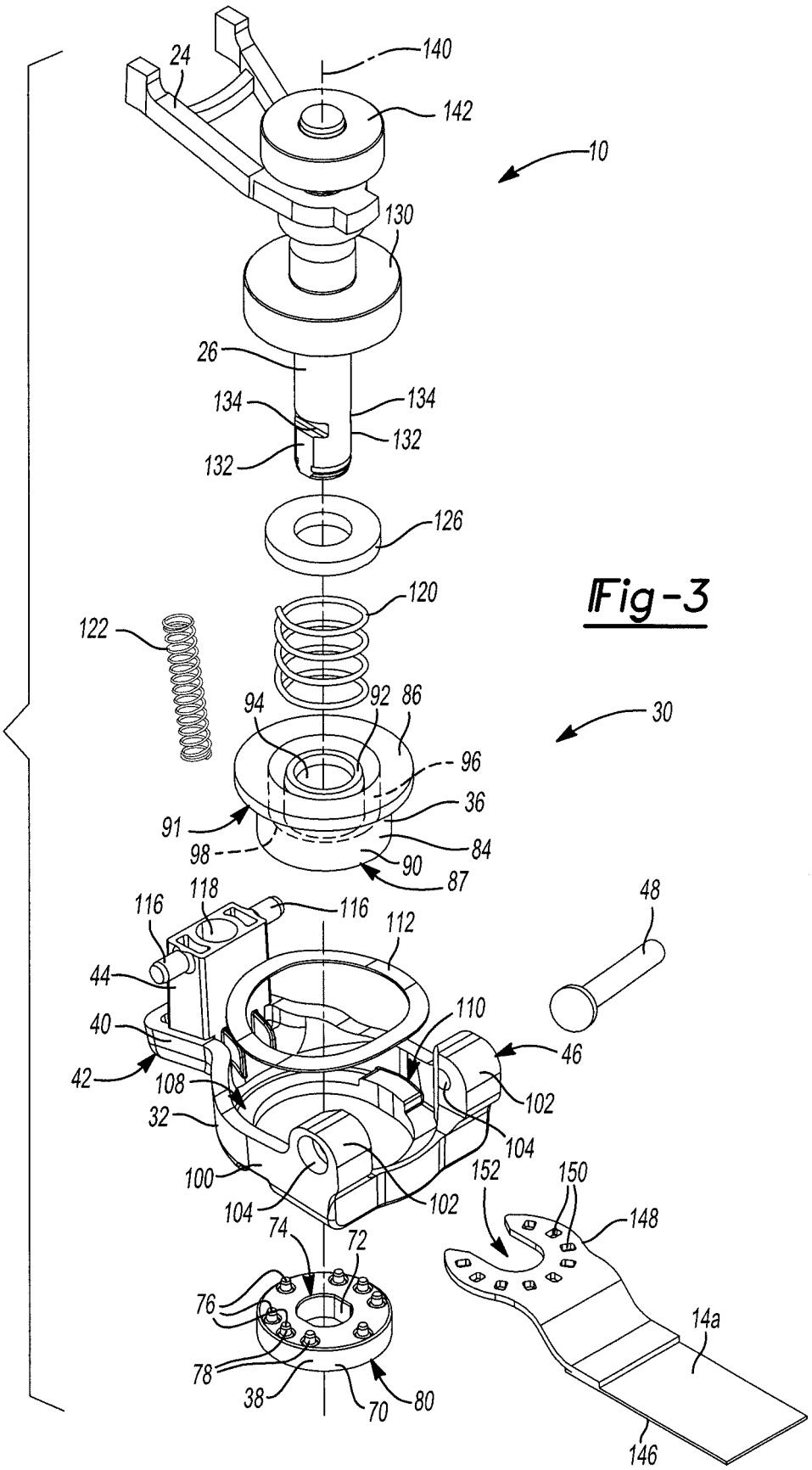
24
140
142
10
130
26
134
134
132
132
126
120
122
94
92
86
30
96
36
91
98
84
90
87
116
118
116
112
48
44
40
110
46
42
108
102
32
104
100
152
150
104
102
148
74
72
76
14a
78
38
70
80
146

Fig-3

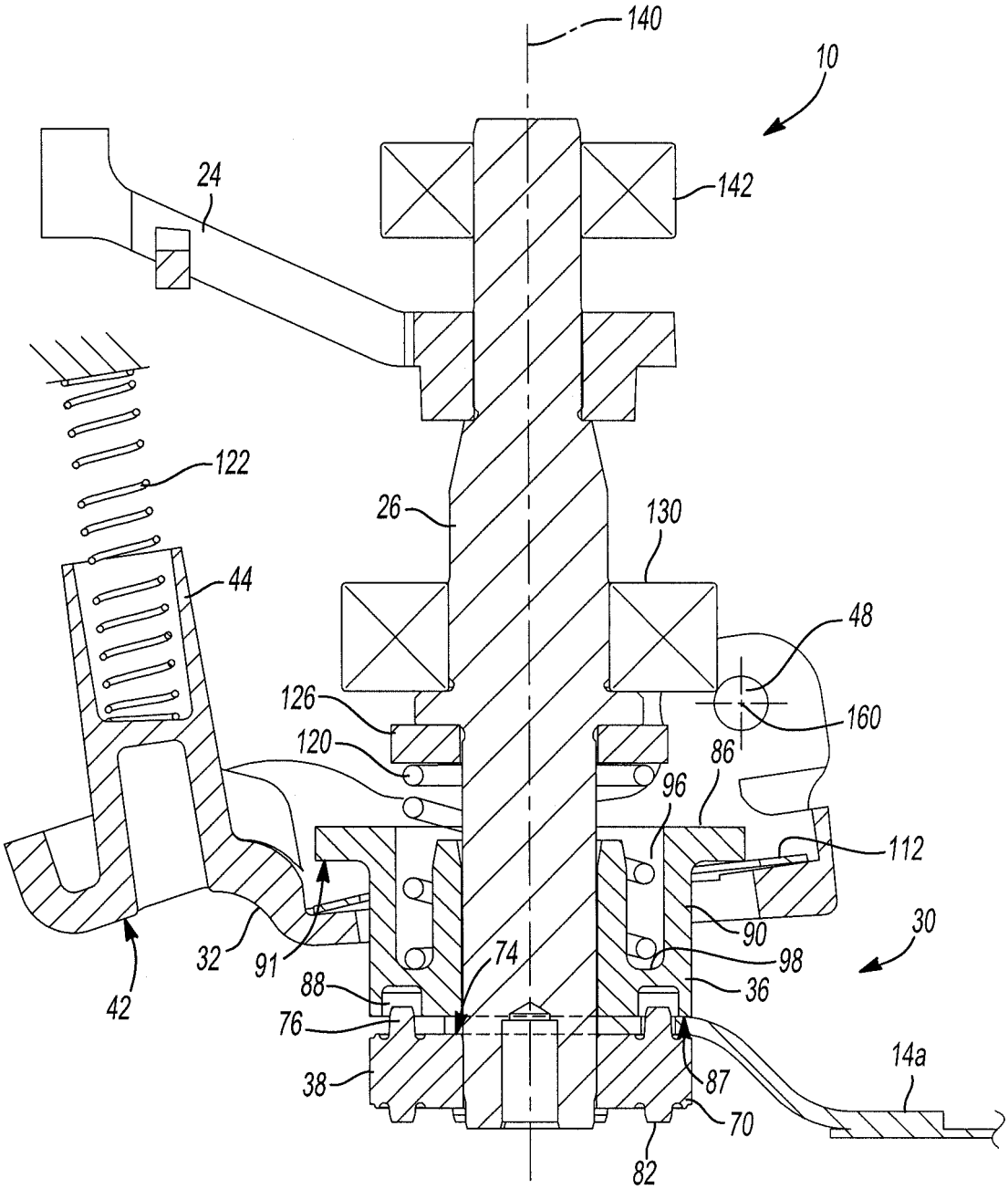
140
10
24
142
122
26
130
44
48
126
160
120
86
96
112
90
30
32
91
74
98
88
36
42
76
14a
38
87
70
82

Fig-4

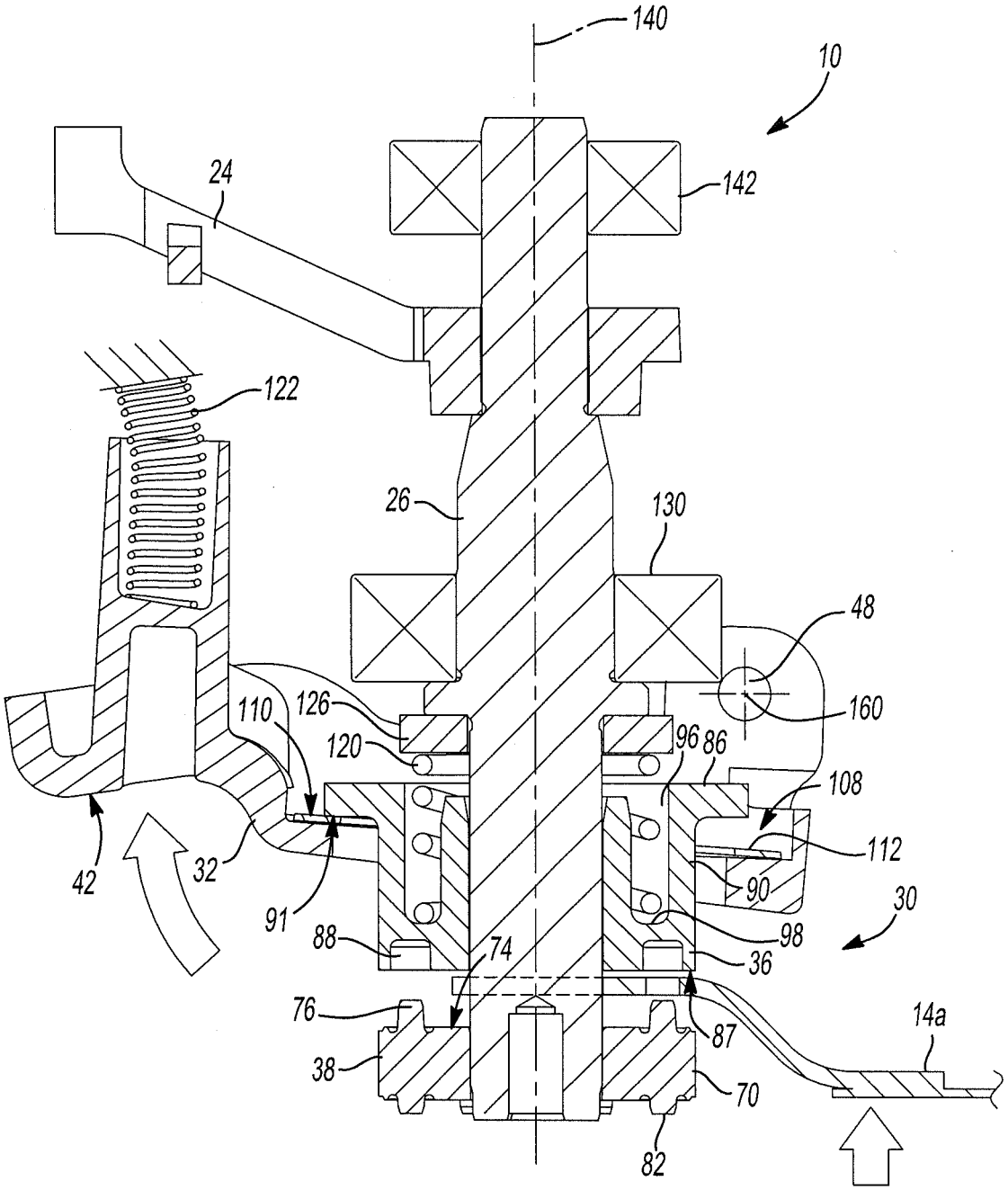
140
10
24
142
122
26
130
48
160
110
126
120
96
86
108
112
42
32
91
90
30
88
74
98
36
76
87
14a
38
70
82

Fig-5

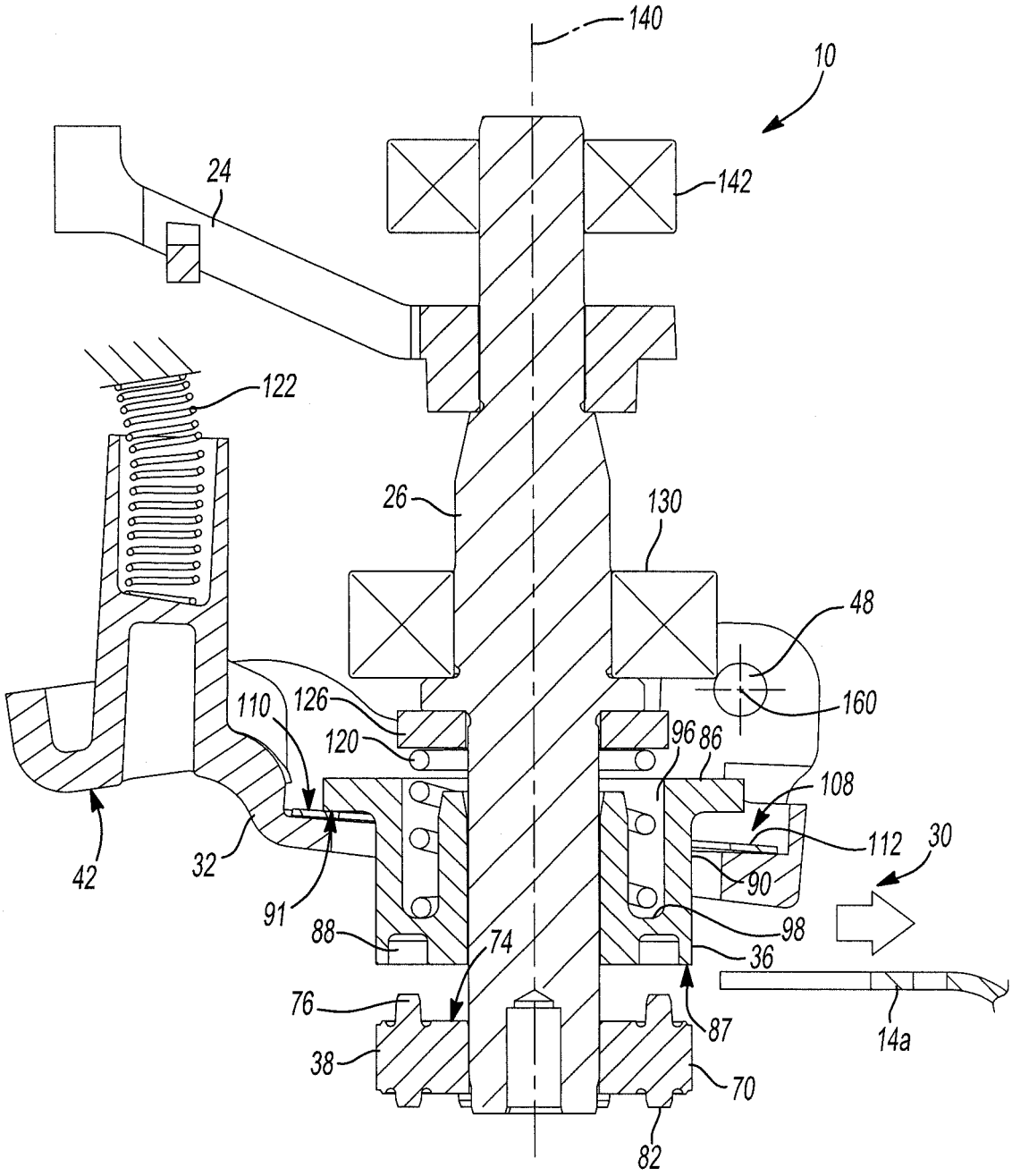
140
10
24
142
122
26
130
48
160
110
126
120
96
86
108
112
30
42
32
91
90
88
74
98
36
76
87
14a
38
70
82

Fig-6

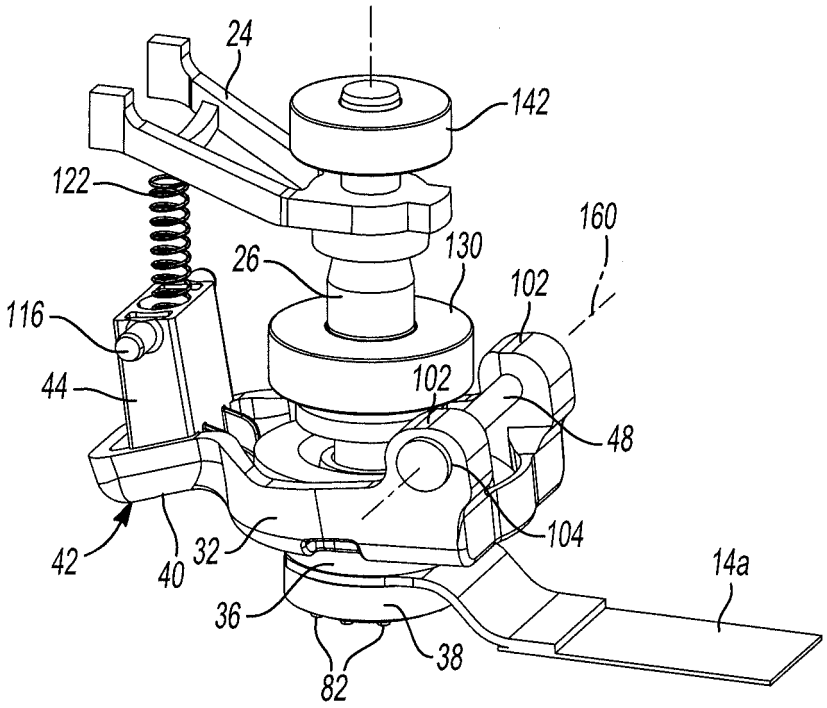

Fig-7

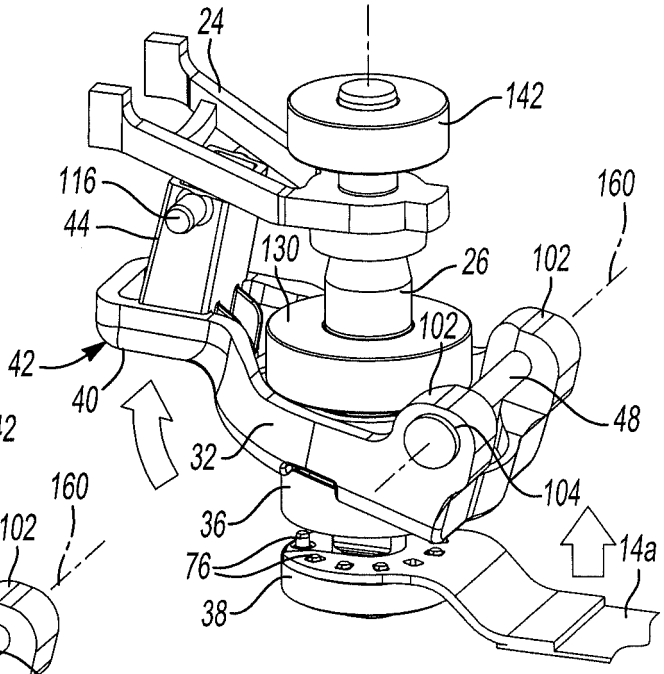

Fig-8

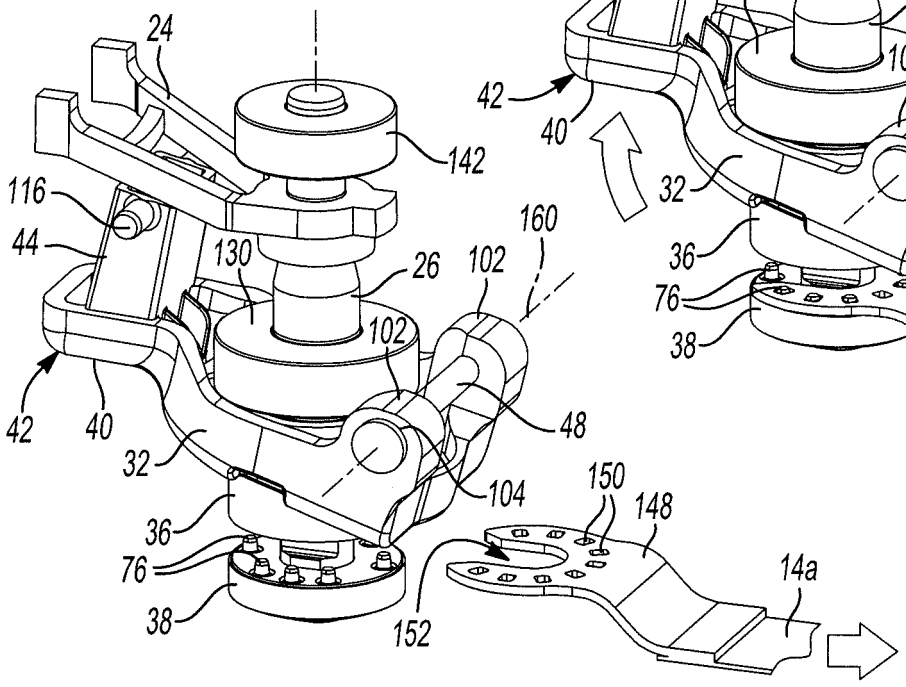

Fig-9

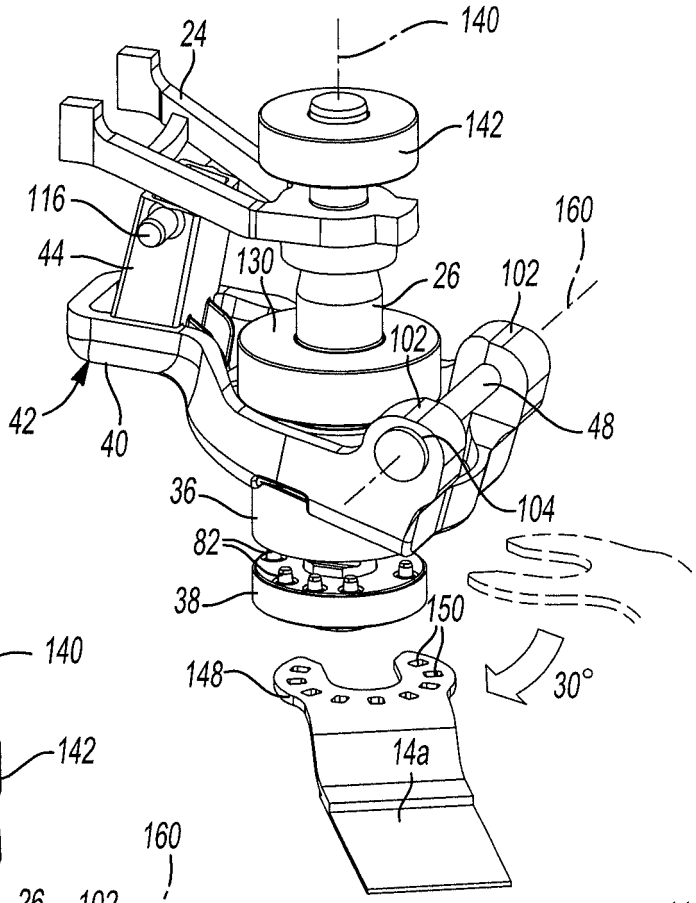

Fig-10

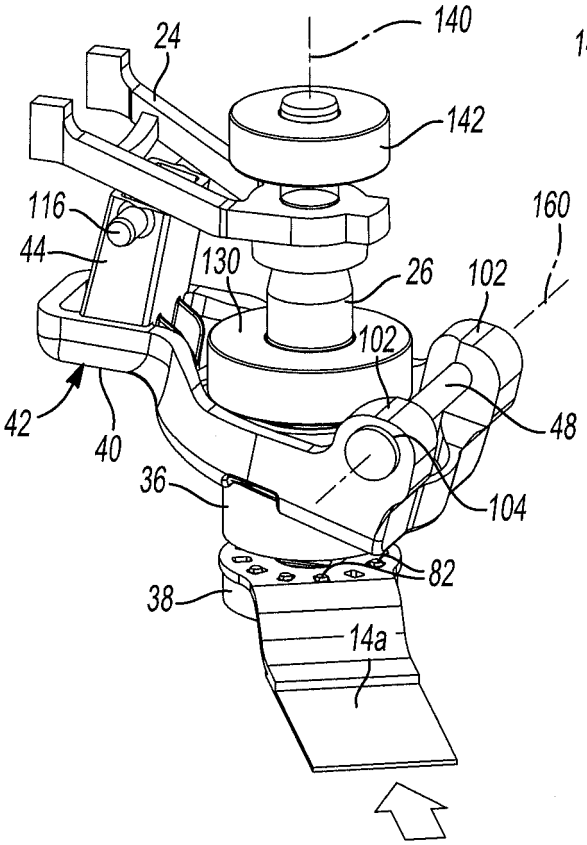

Fig-11

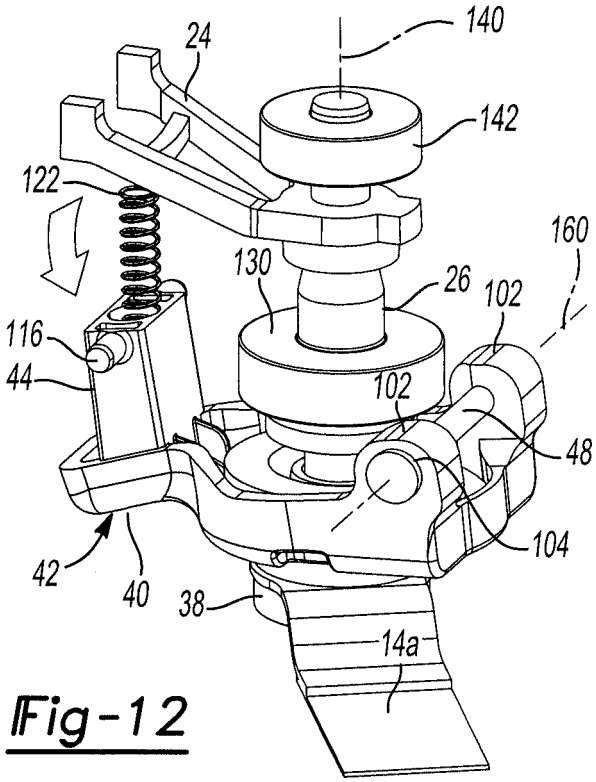

Fig-12

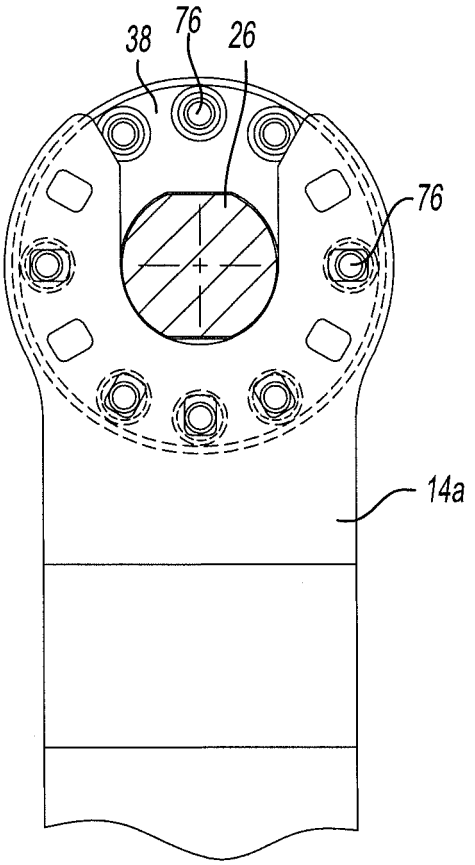

Fig-13

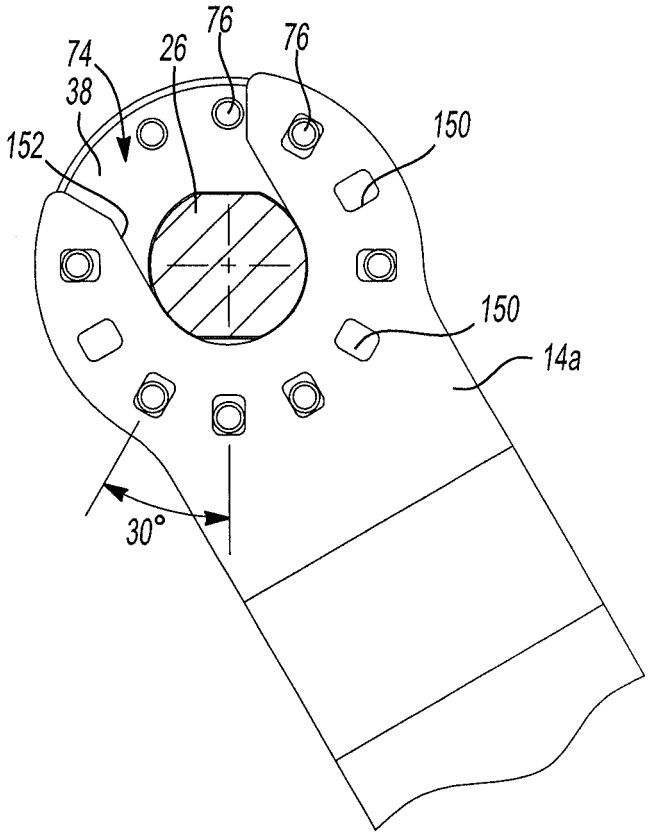

Fig-14

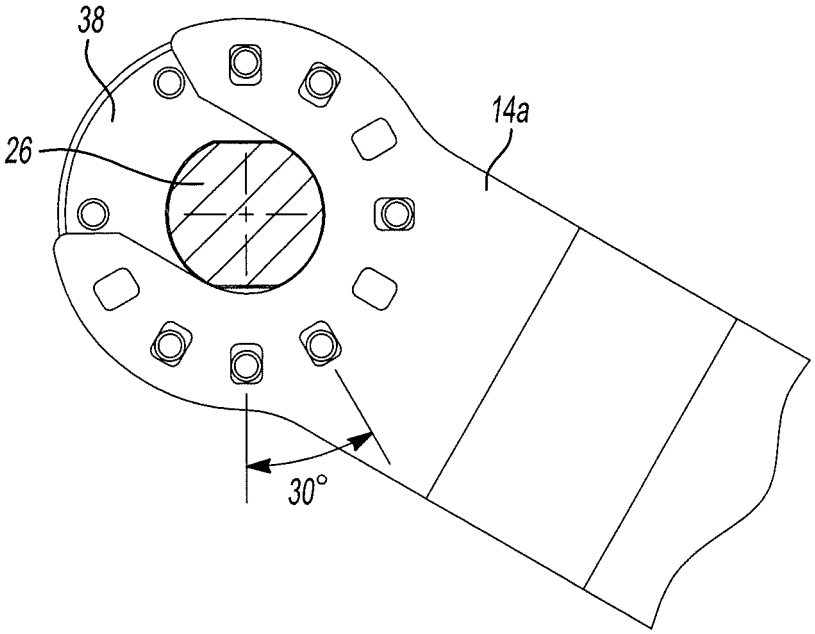

Fig-15

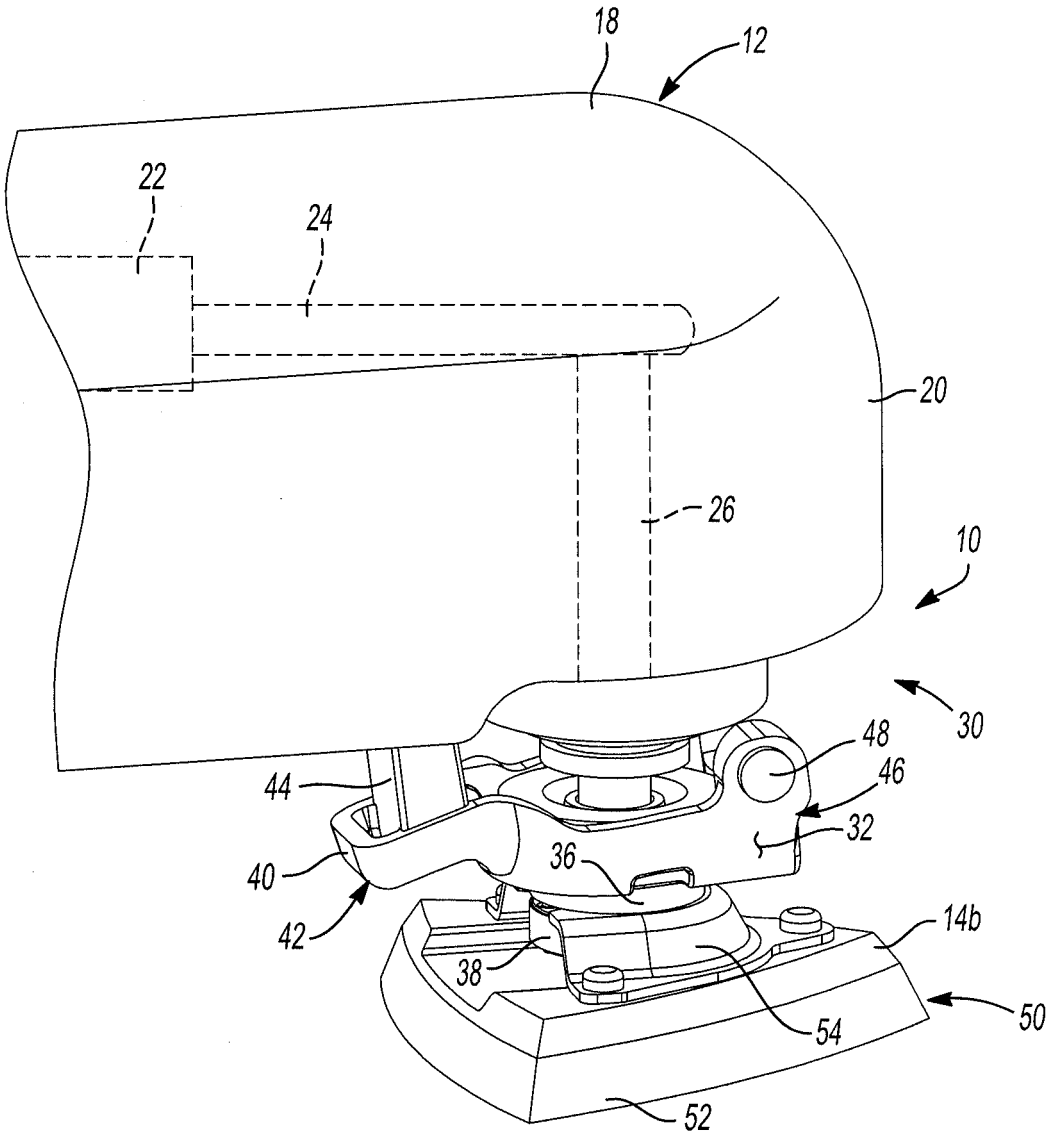

Fig-16

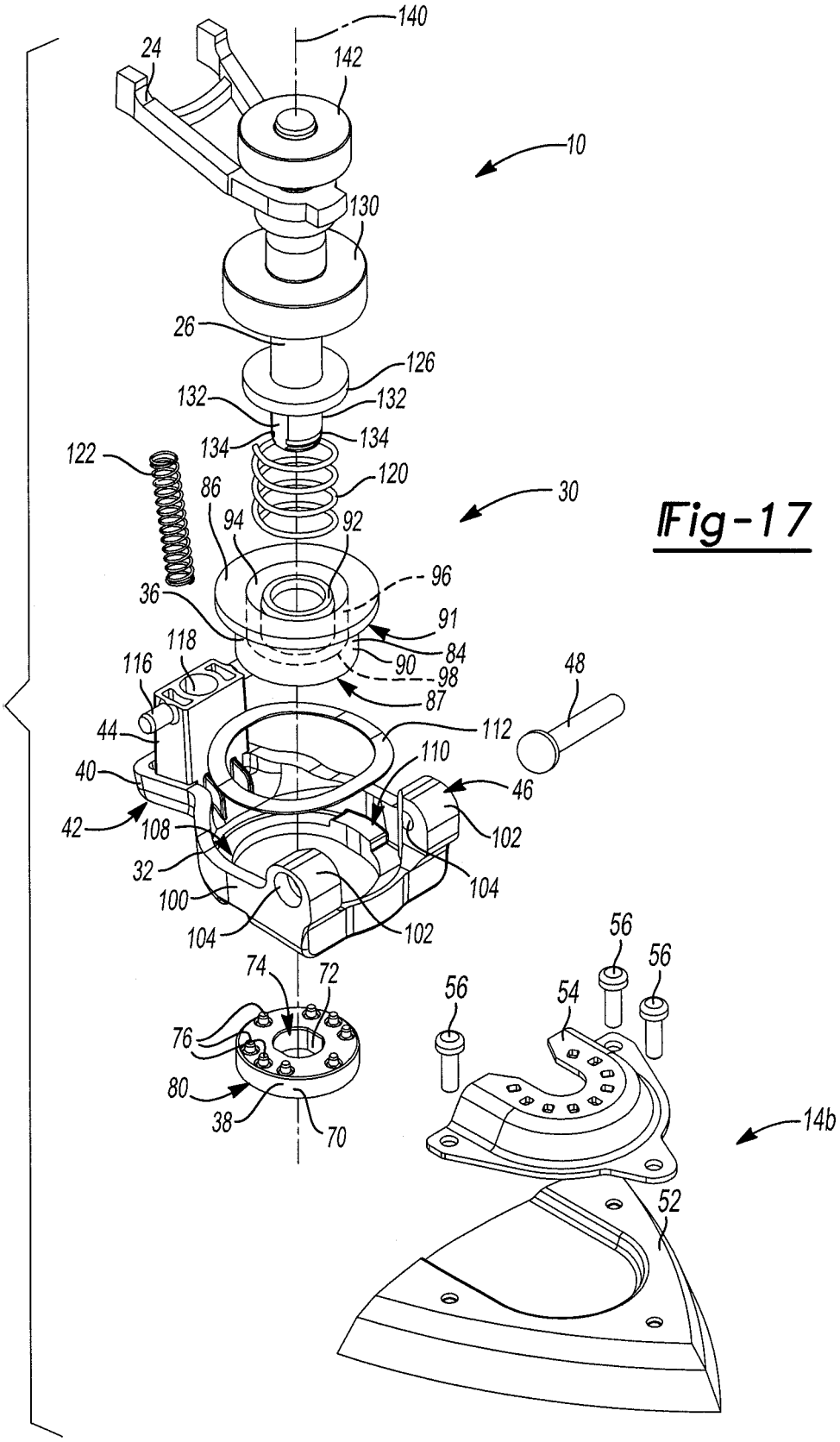
140
24
142
10
130
26
126
132
132
134
134
122
120
86
30
94
92
96
36
91
118
84
116
90
98
48
87
44
112
110
40
46
42
108
102
32
104
100
104
102
56
56
74
72
56
54
76
80
38
70
14b
52

Fig-17

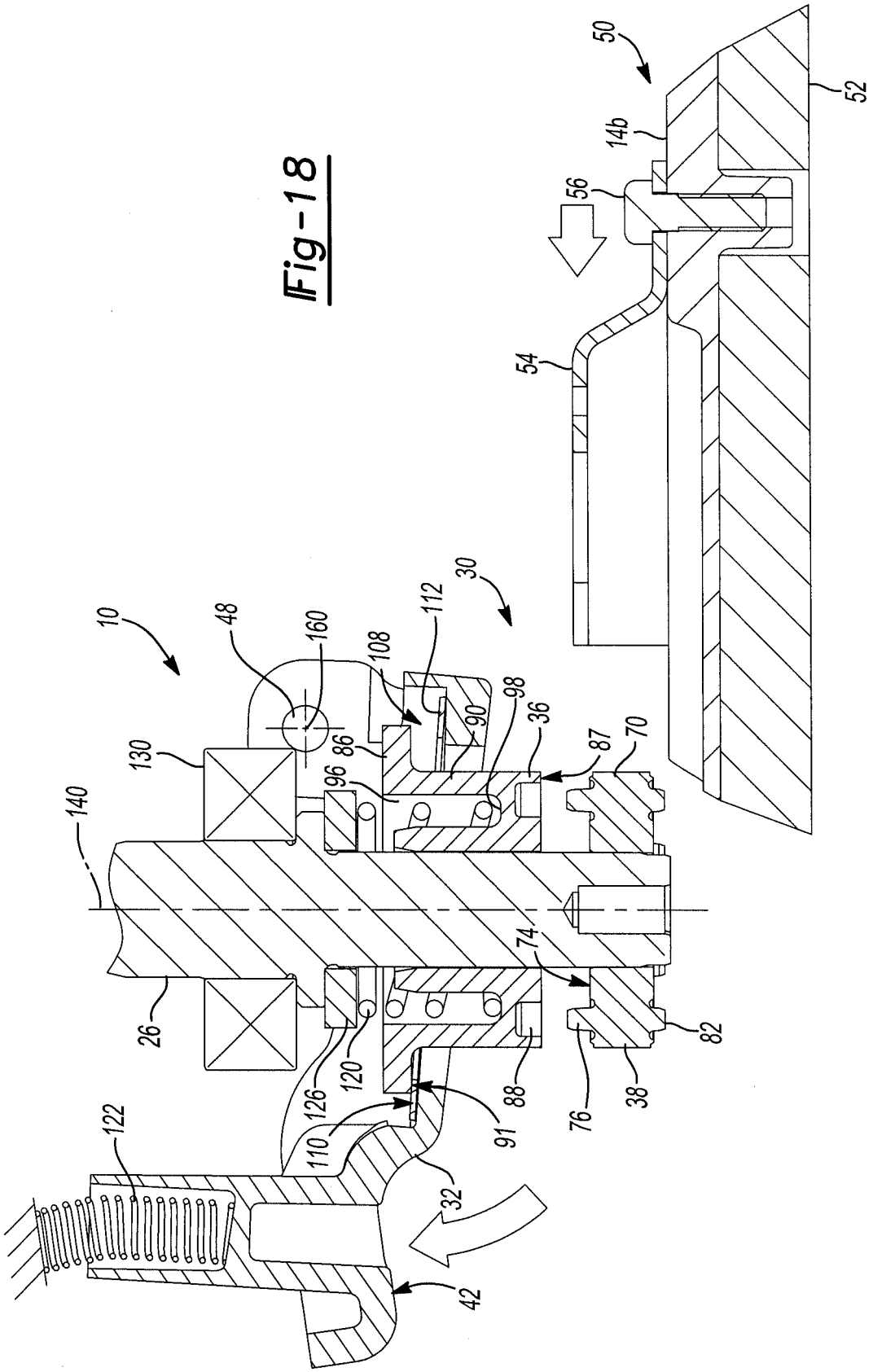
10
30
48
160
108
112
90
98
36
87
70
86
96
130
140
26
74
82
38
76
88
91
120
126
110
32
42
122
50
52
14b
56
54

Fig-18

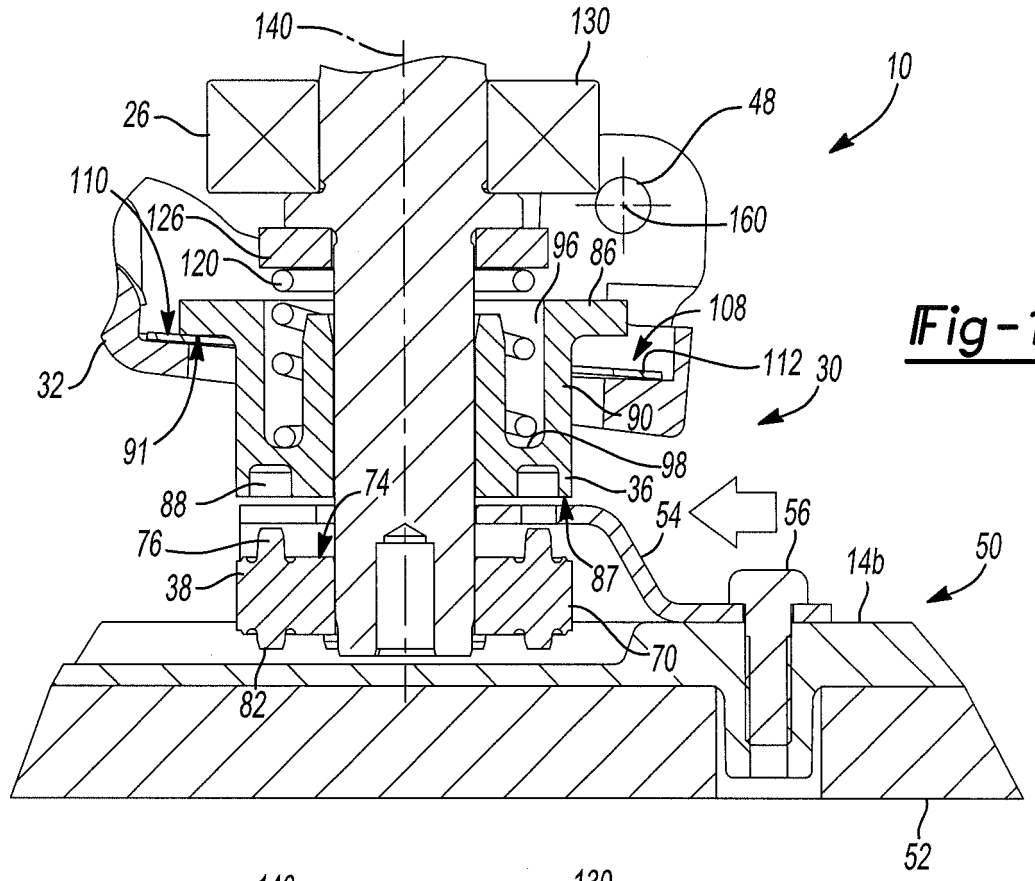
140
130
10
26
48
110
126
160
120
96
86
108
112
30
32
90
91
98
88
74
36
54
56
76
87
14b
50
38
70
82
52

Fig-19

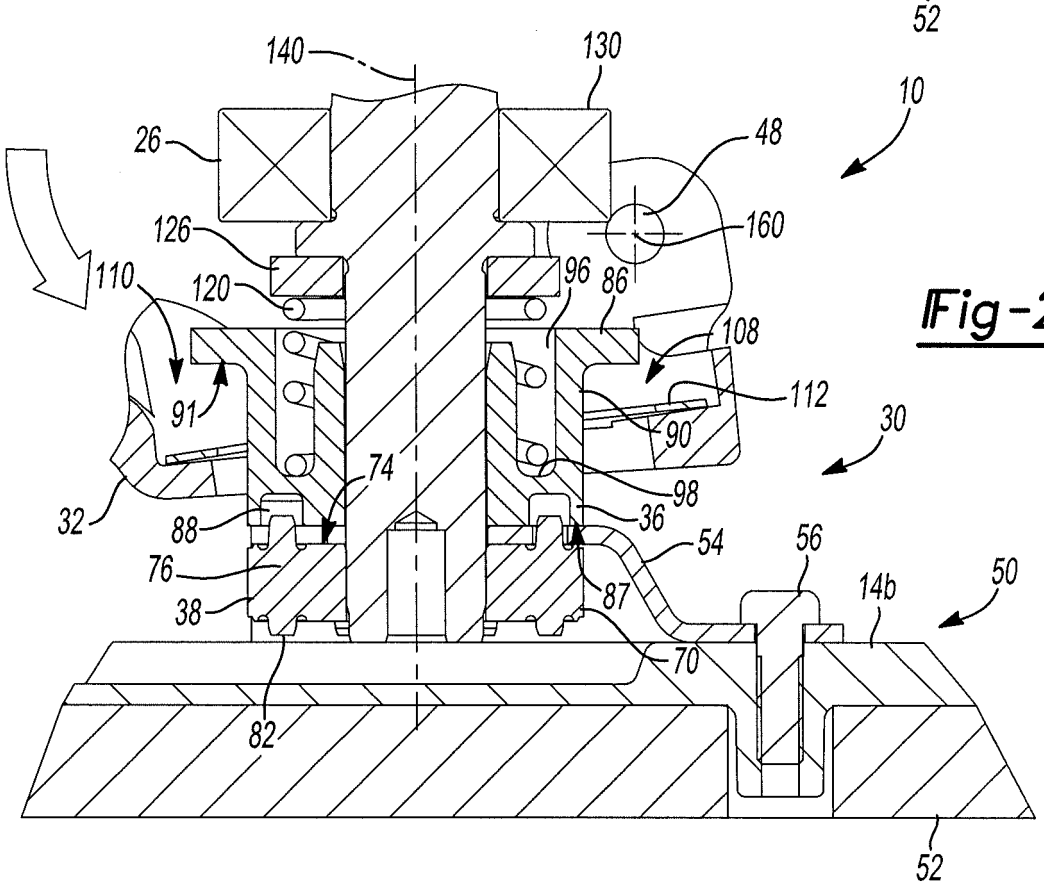
140
130
10
26
48
126
160
110
120
96
86
108
112
91
90
30
74
98
32
88
36
54
56
76
87
14b
50
38
70
82
52

Fig-20

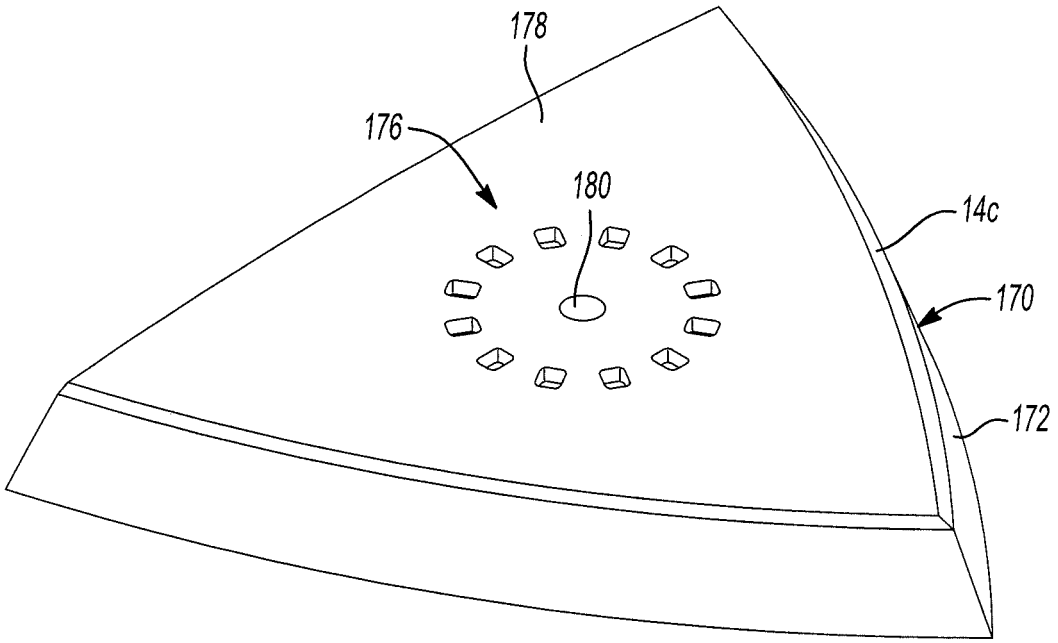

Fig-21

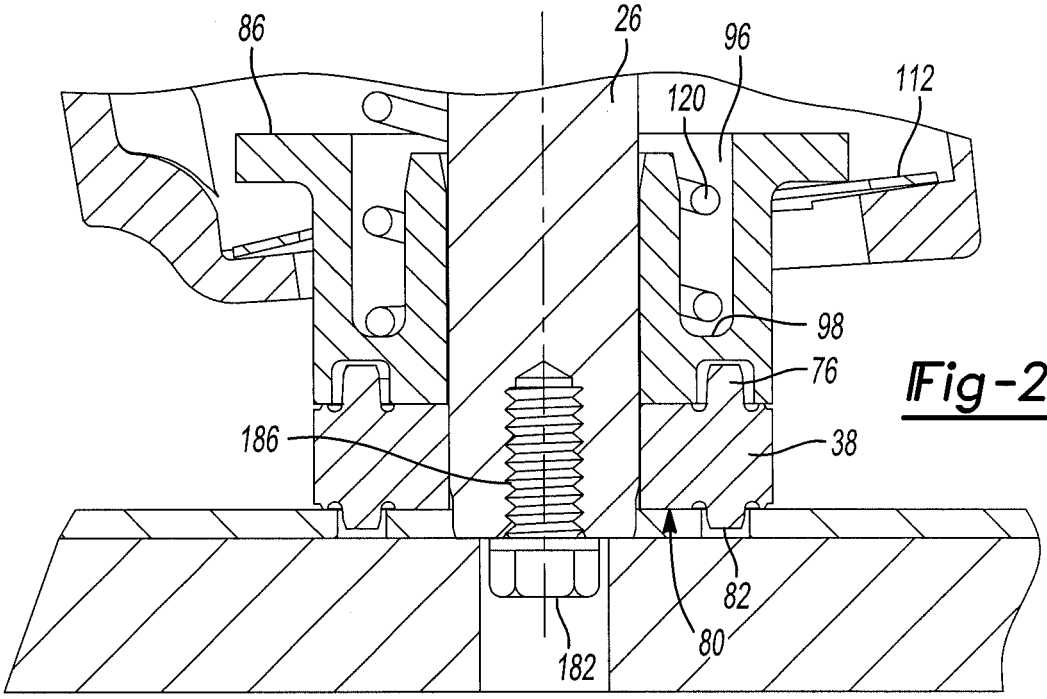

Fig-22

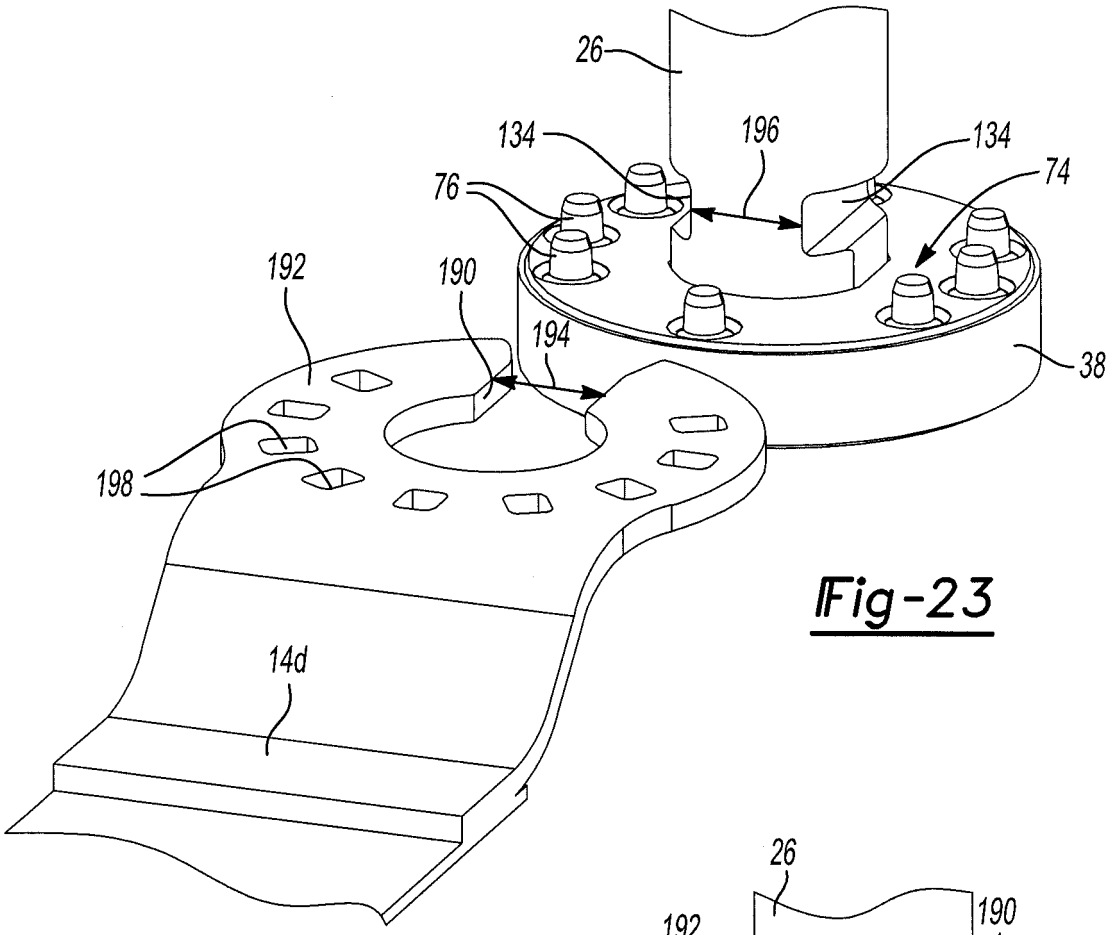
26
134
196
134
76
74
192
190
194
38
198
14d

Fig-23

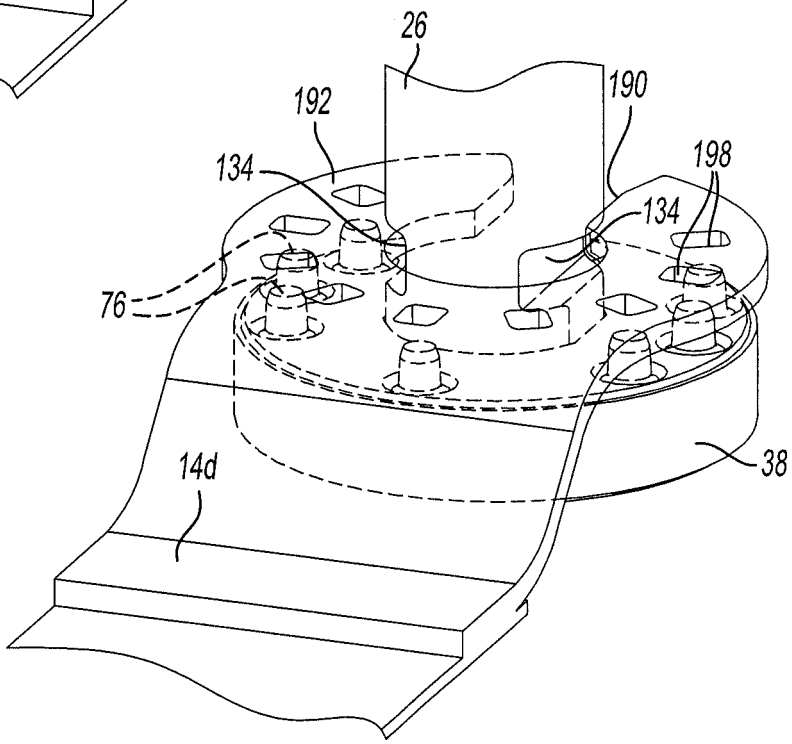
26
192
190
134
198
134
76
38
14d

Fig-24

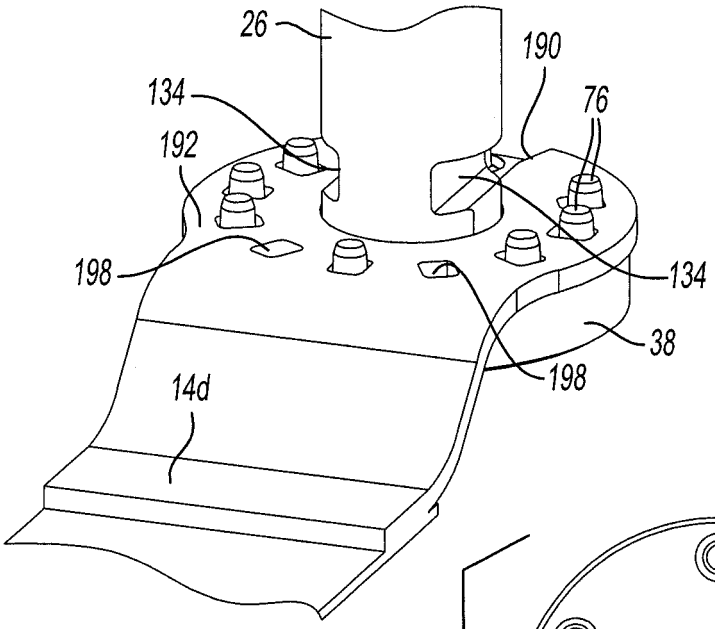

Fig-25

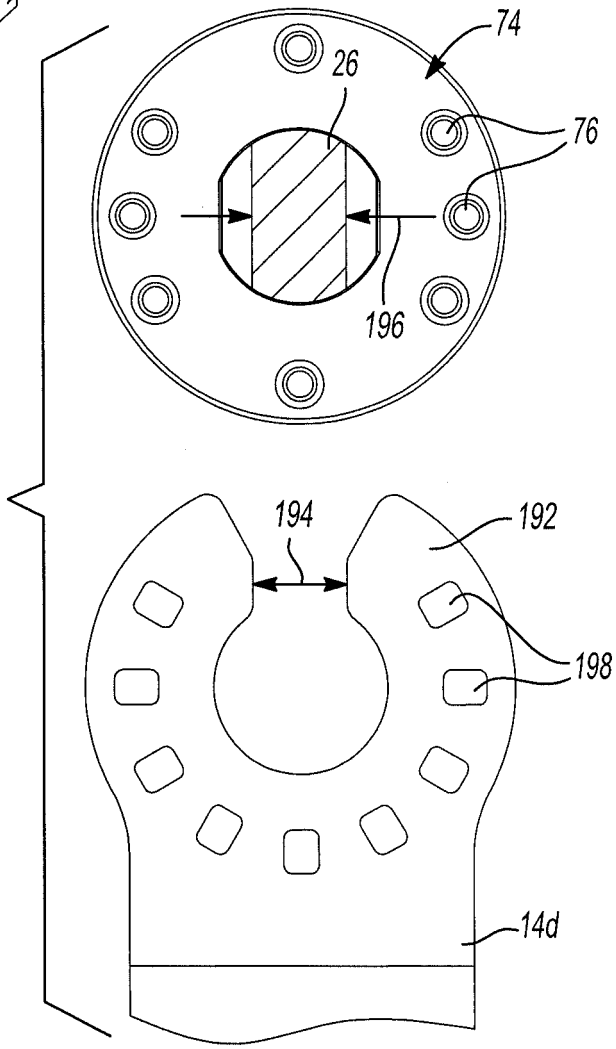

Fig-26

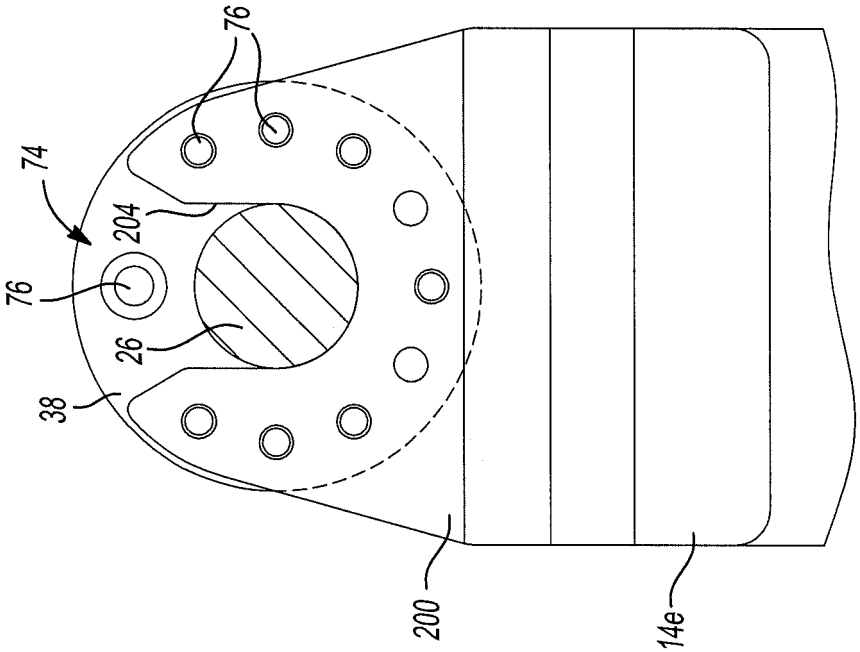

Fig-28

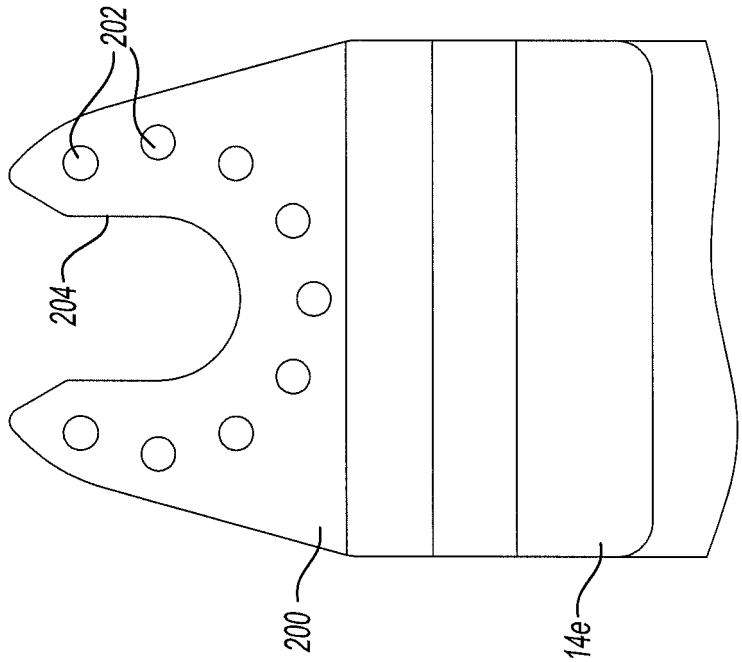

Fig-27

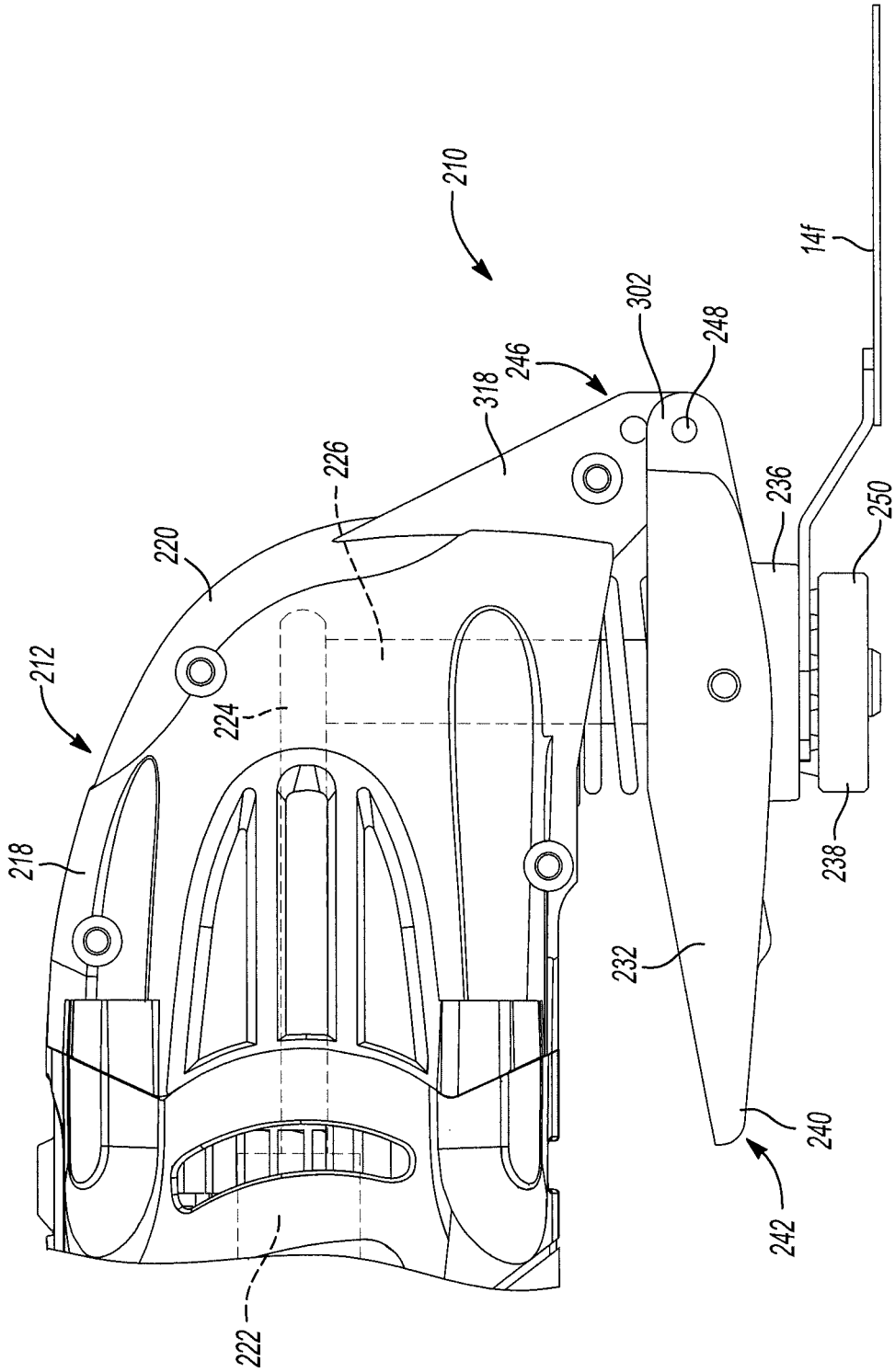
210
14f
302
248
246
318
226
236
250
220
212
224
218
238
232
240
242
222

Fig-29

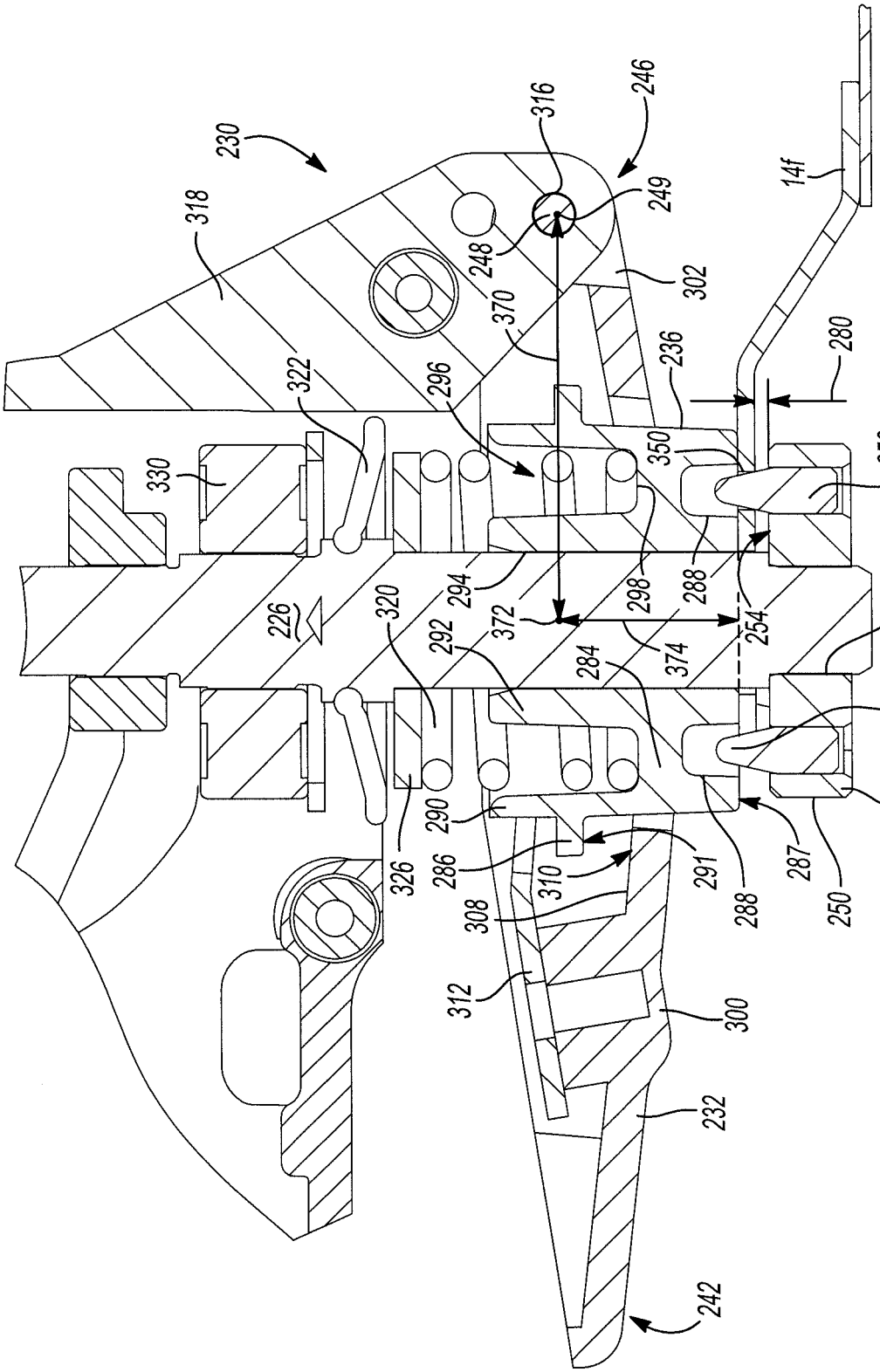
230
318
316
246
249
248
302
370
14f
280
236
322
296
330
350
256
294
298
288
252
226
320
292
372
254
374
284
258
290
286
310
291
287
238
326
308
288
250
312
300
232
242

Fig-30

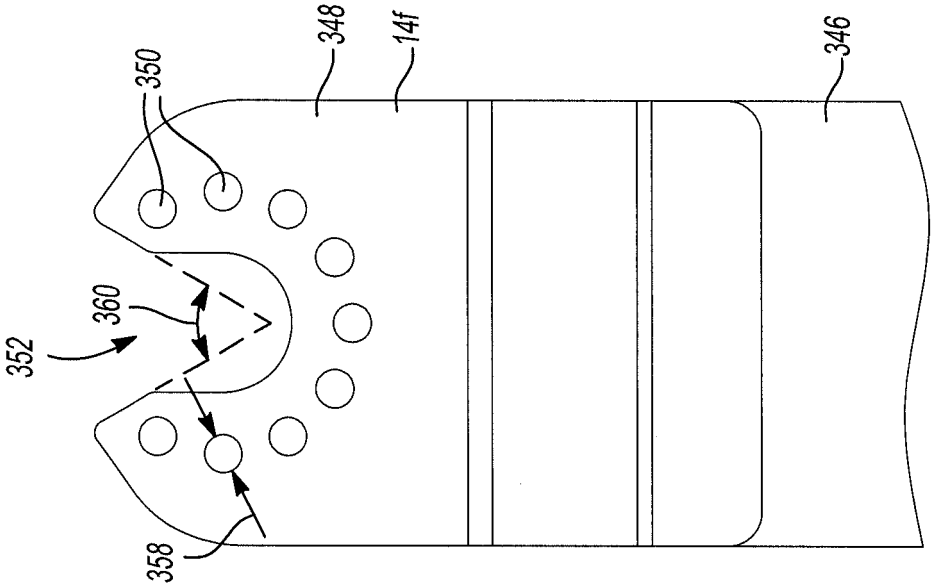
352
360
358
350
348
14f
346

Fig-32

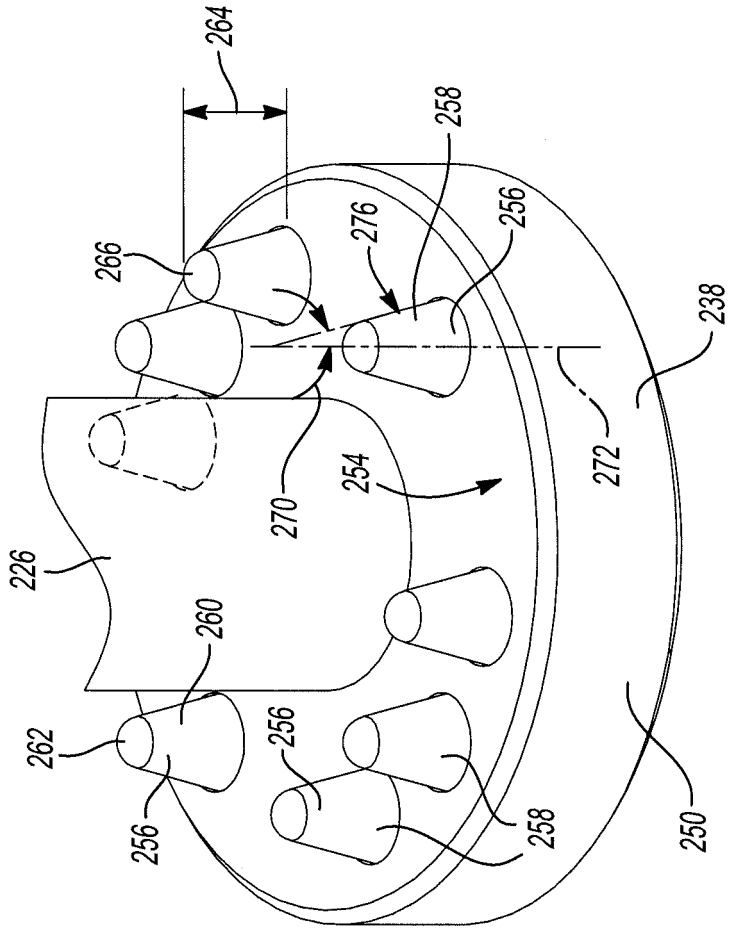
264
266
276
258
256
238
272
270
254
226
260
262
256
256
258
250

Fig-31

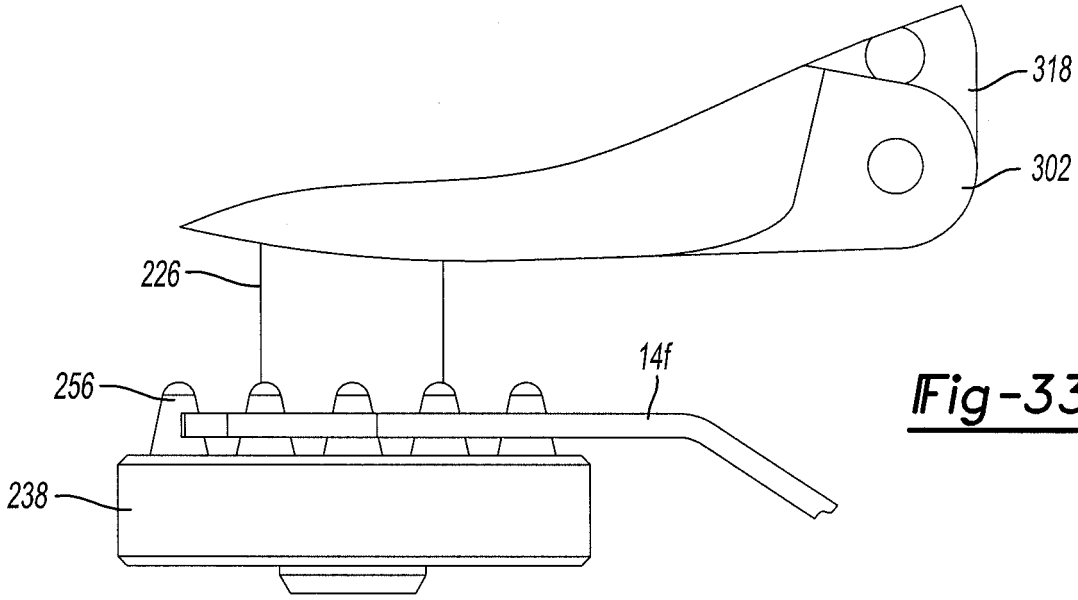
318
302
226
14f
256
238

Fig-33

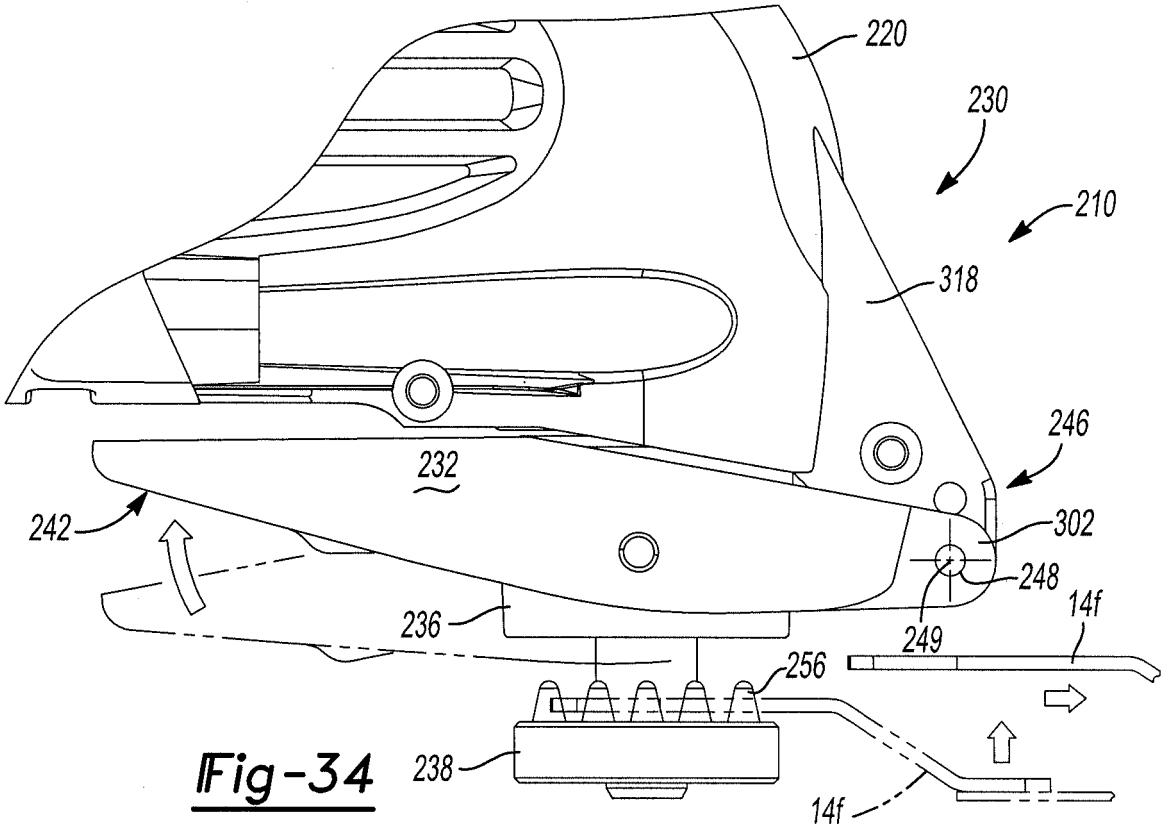
220
230
210
318
246
232
242
302
248
249
14f
236
256
238
14f

Fig-34

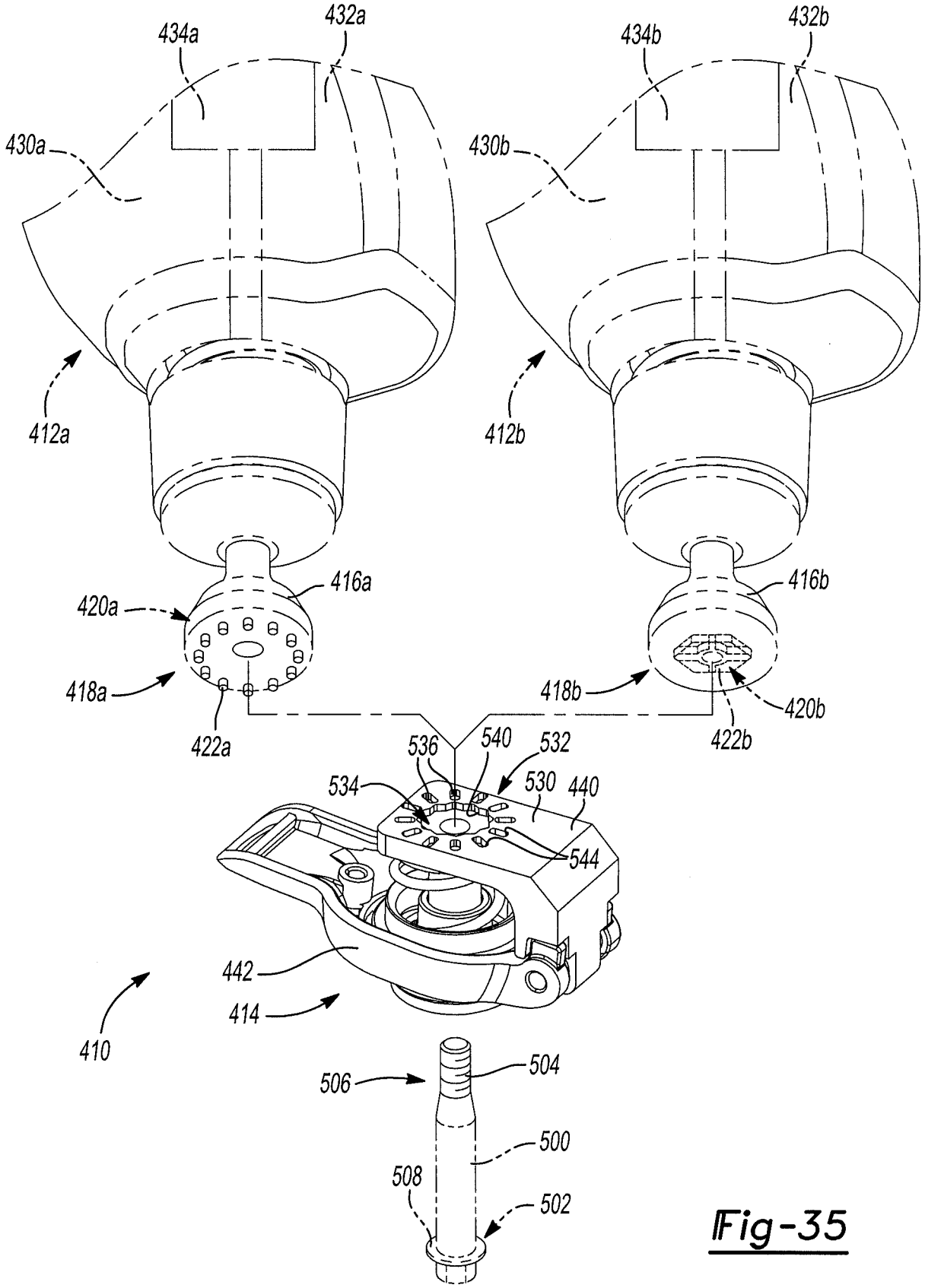
434a
432a
434b
432b
430a
430b
412a
412b
416a
416b
420a
418a
422a
418b
420b
422b
536
540
532
534
530
440
544
442
414
410
506
504
500
508
502

Fig-35

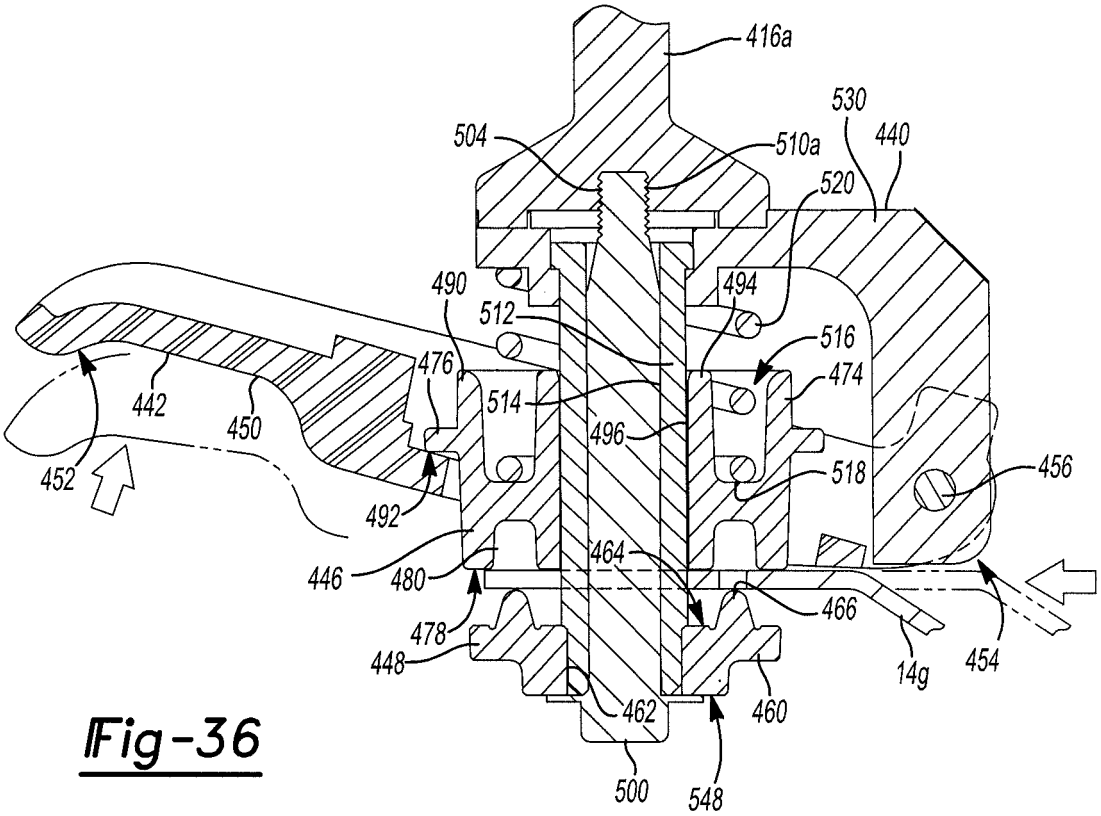
416a
530
504
510a
440
520
490
494
512
516
476
474
514
442
450
496
518
456
452
492
464
446
480
466
478
448
14g
454
462
460
500
548

Fig-36

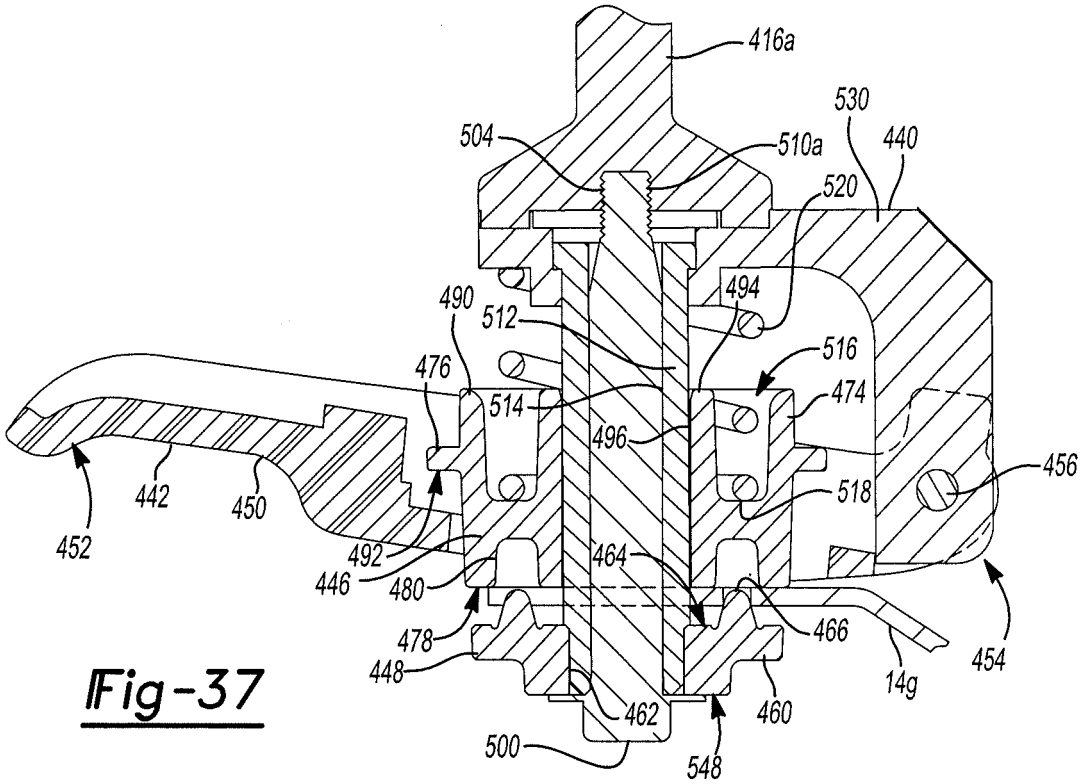
416a
530
504
510a
440
520
490
494
512
516
476
474
514
496
442
450
518
456
452
492
464
446
480
466
478
448
14g
454
462
460
500
548

Fig-37

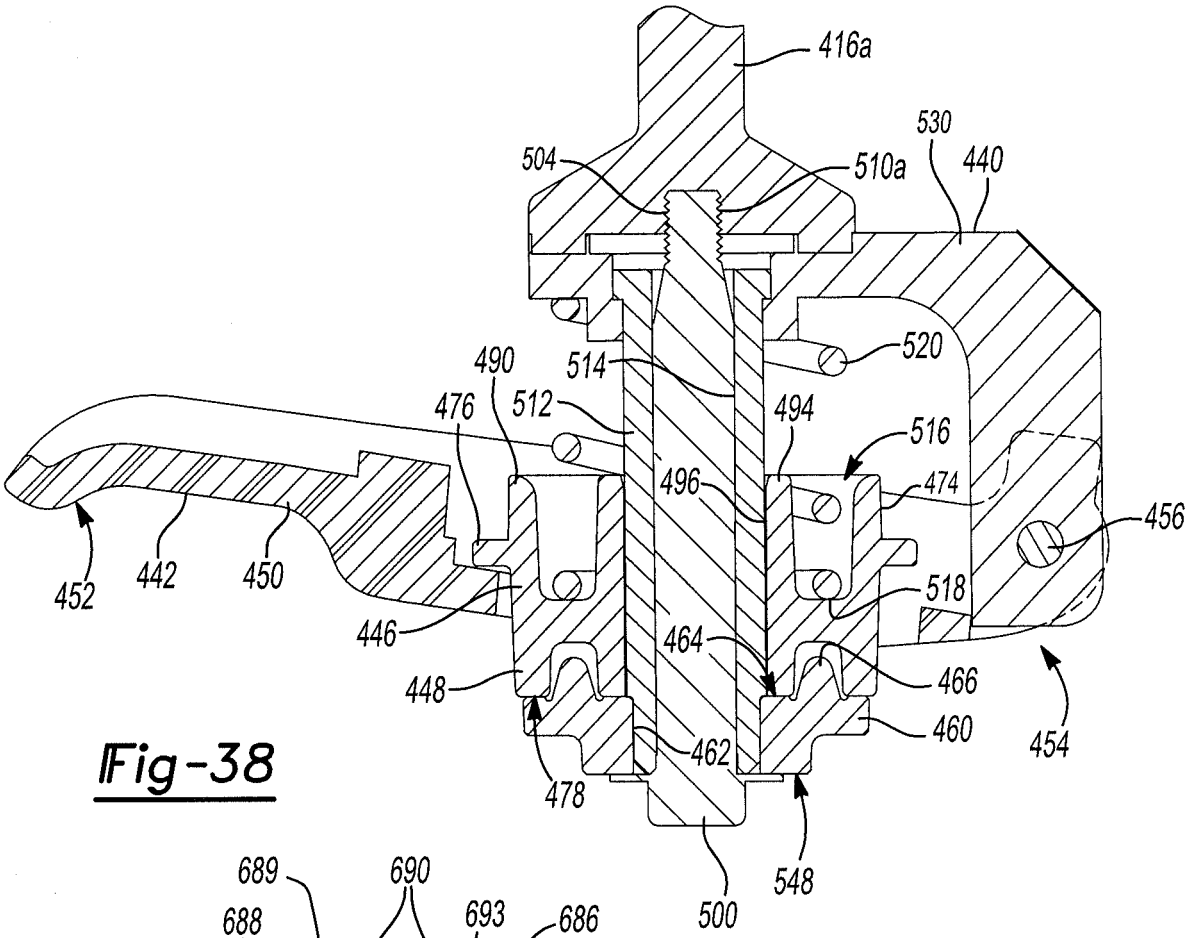
416a
530
504
510a
440
520
490
514
476
512
494
516
496
474
456
452
442
450
518
446
464
466
448
460
454
462
478
548
500

Fig-38

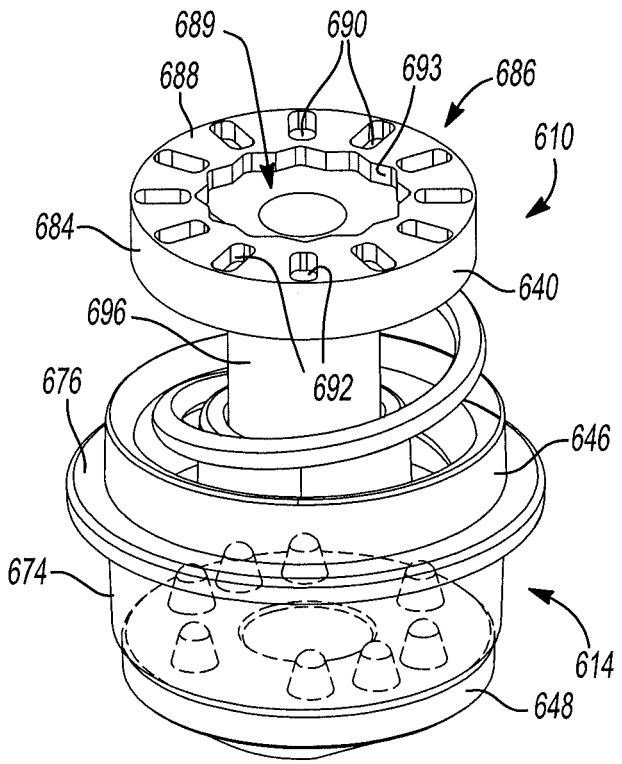
689
690
688
693
686
610
684
640
696
692
676
646
674
614
648

Fig-39

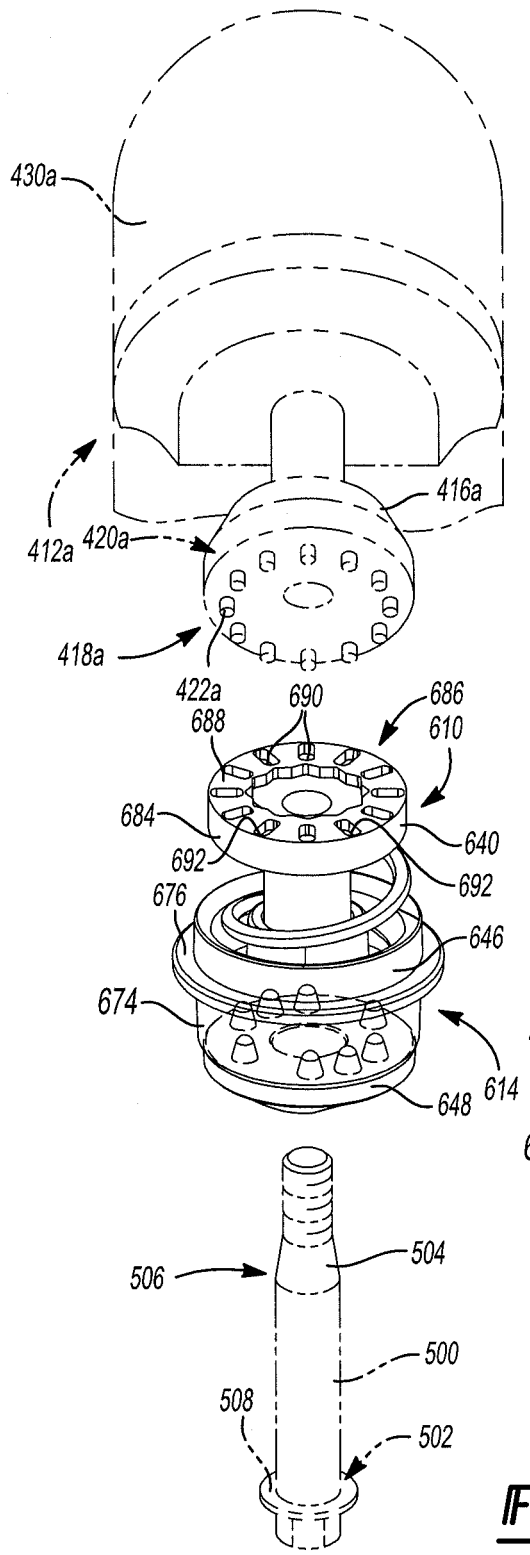
430a
416a
412a
420a
418a
422a
690
686
688
610
684
640
692
692
676
646
674
614
648
506
504
500
508
502

Fig-40

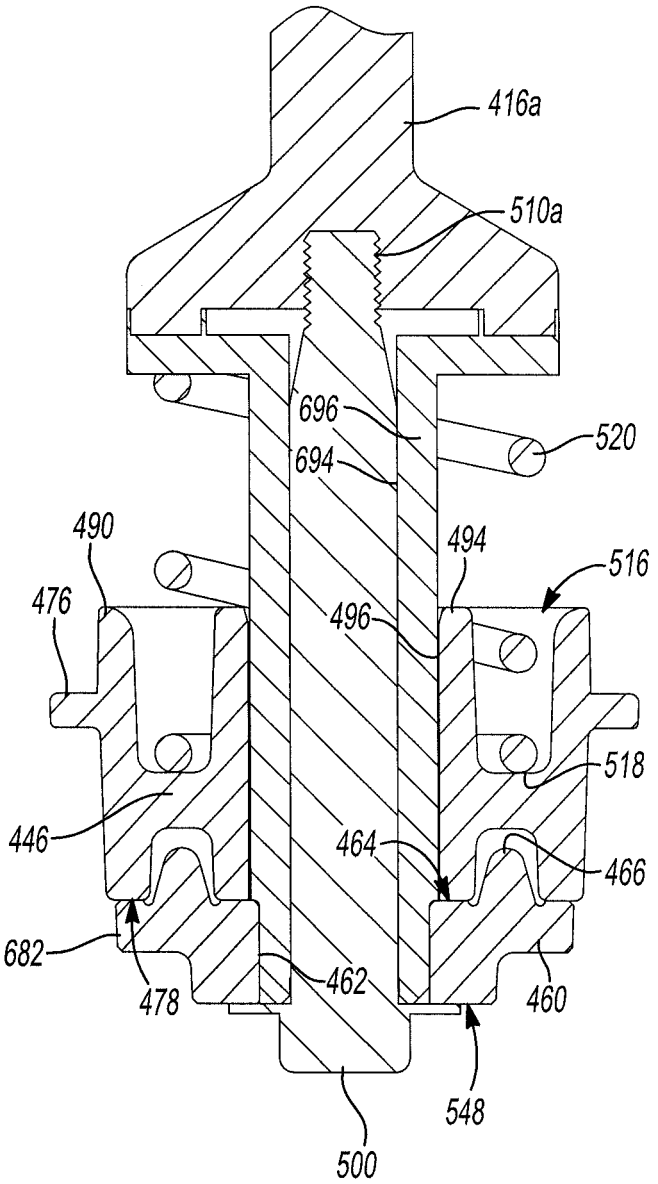
416a
510a
696
520
694
490
494
516
476
496
518
446
464
466
682
478
462
460
548
500

Fig-41

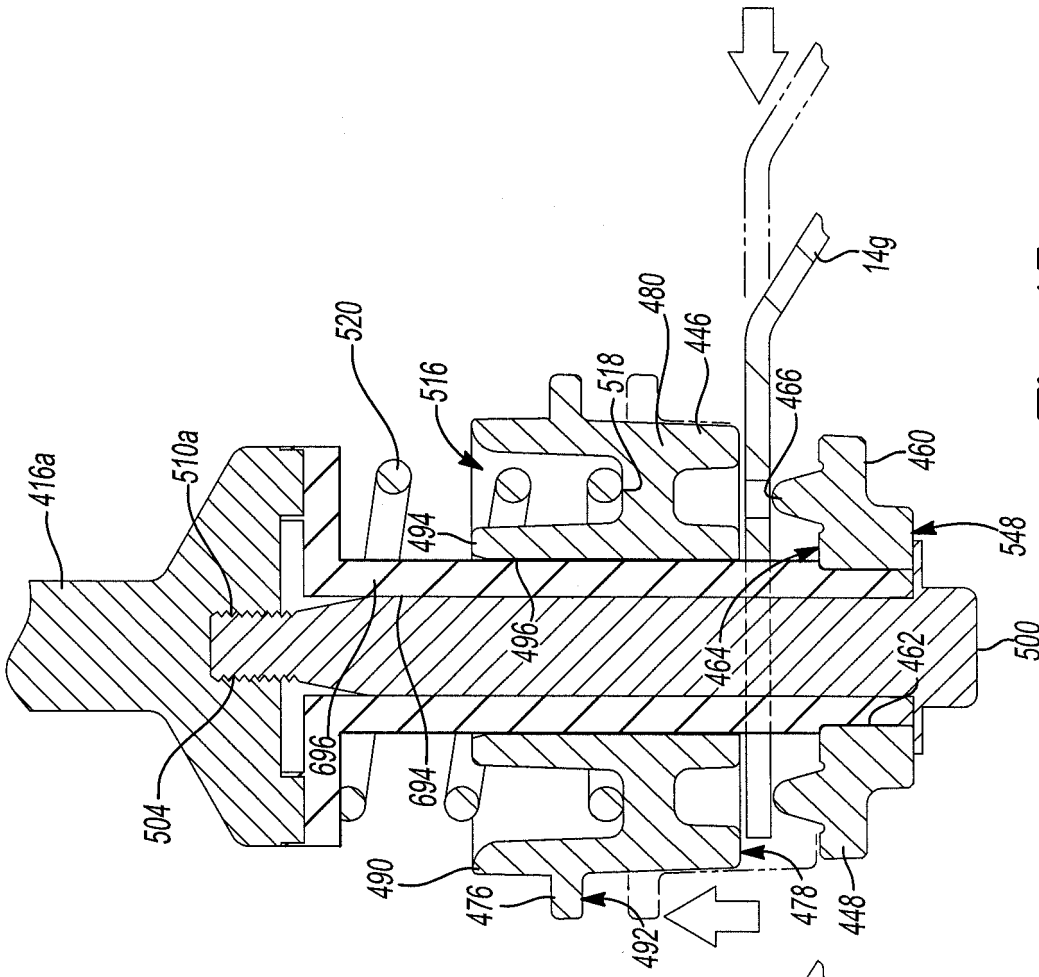
416a
510a
520
516
518
480
446
466
14g
460
548
494
496
464
462
500
504
696
694
490
476
492
478
448

Fig-43

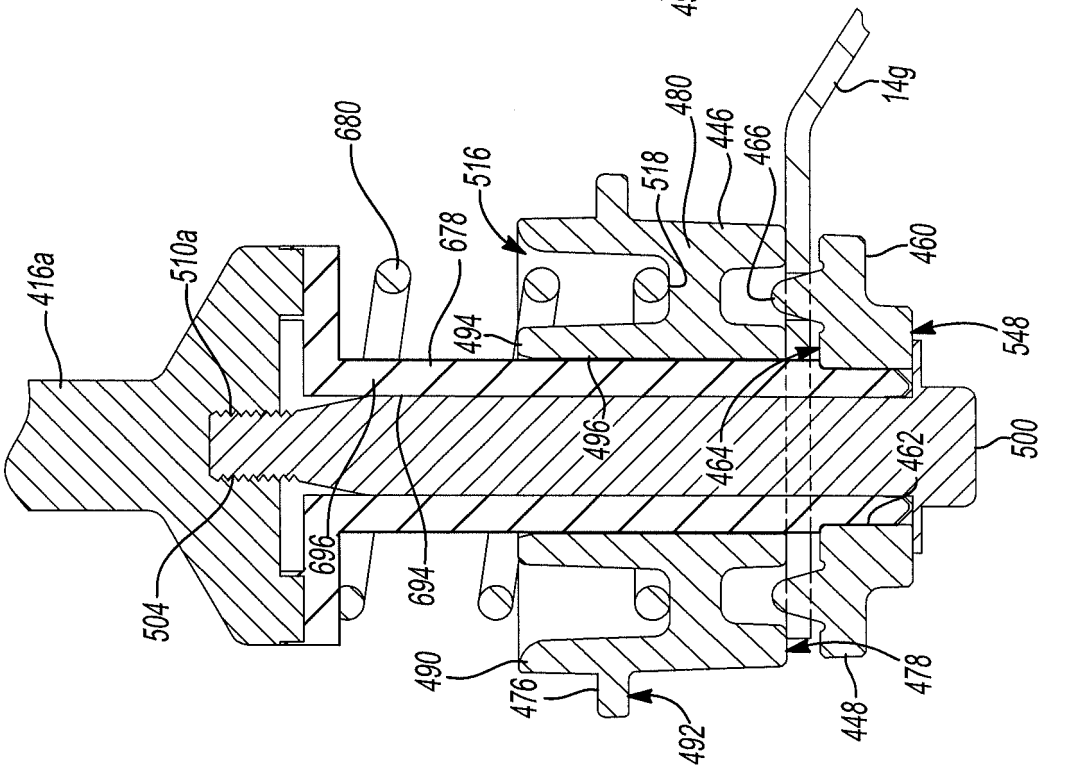
416a
510a
680
678
516
518
480
446
466
14g
460
548
494
496
464
462
500
504
696
694
490
476
492
448
478

Fig-42

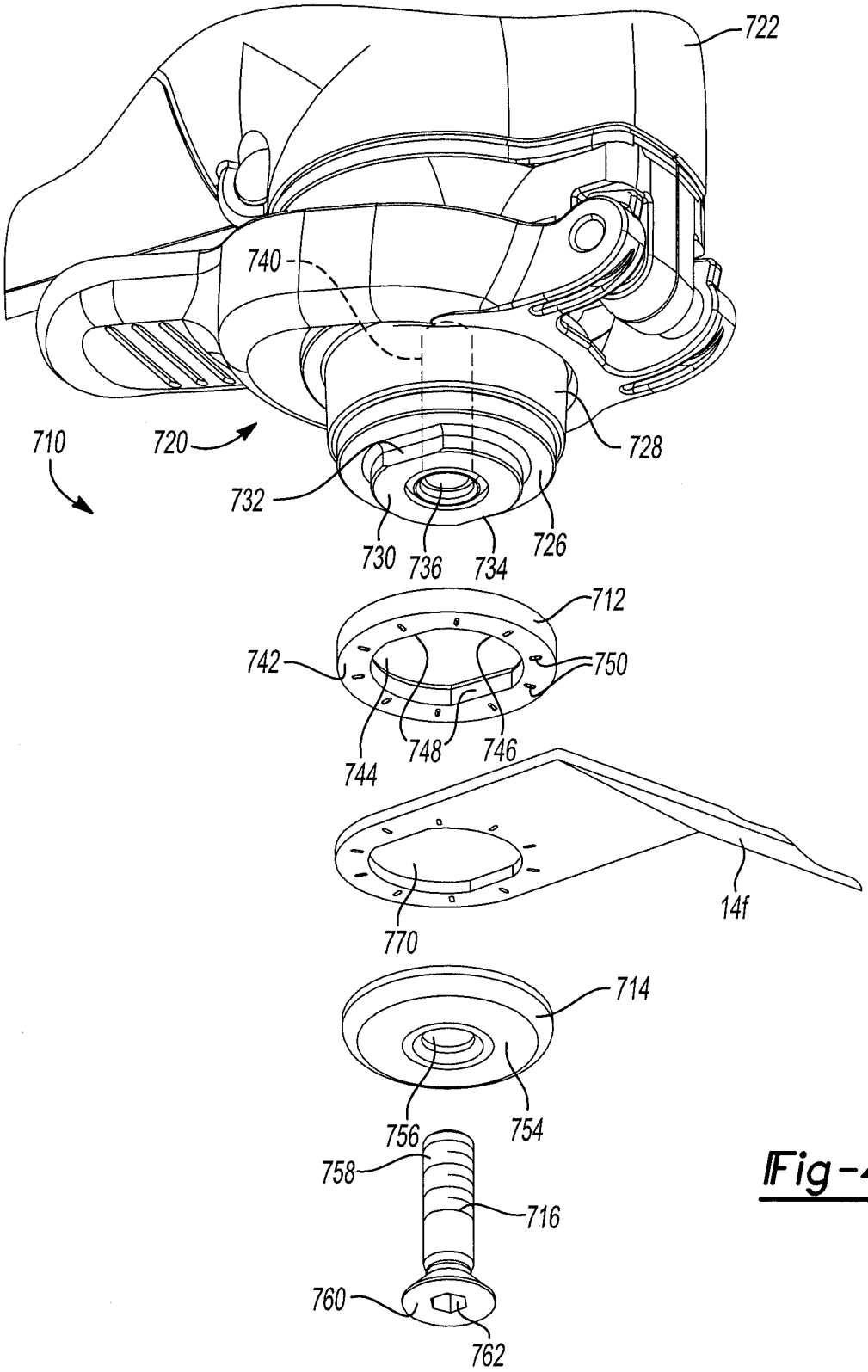
722
740
710
720
728
732
730
736
734
726
712
742
750
744
748
746
14f
770
714
756
754
758
716
760
762

Fig-44

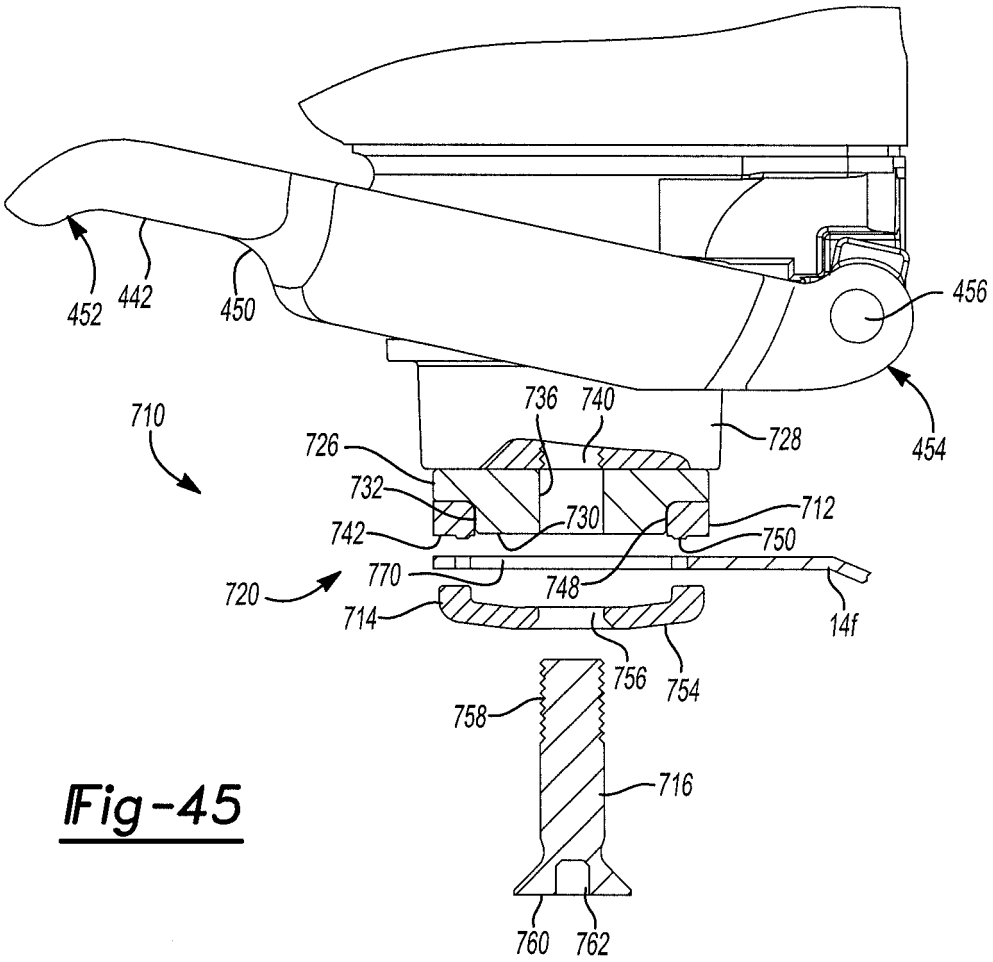
452
442
450
456
454
710
736
740
728
726
732
730
712
742
750
720
770
748
714
14f
756
754
758
716
760
762

Fig-45

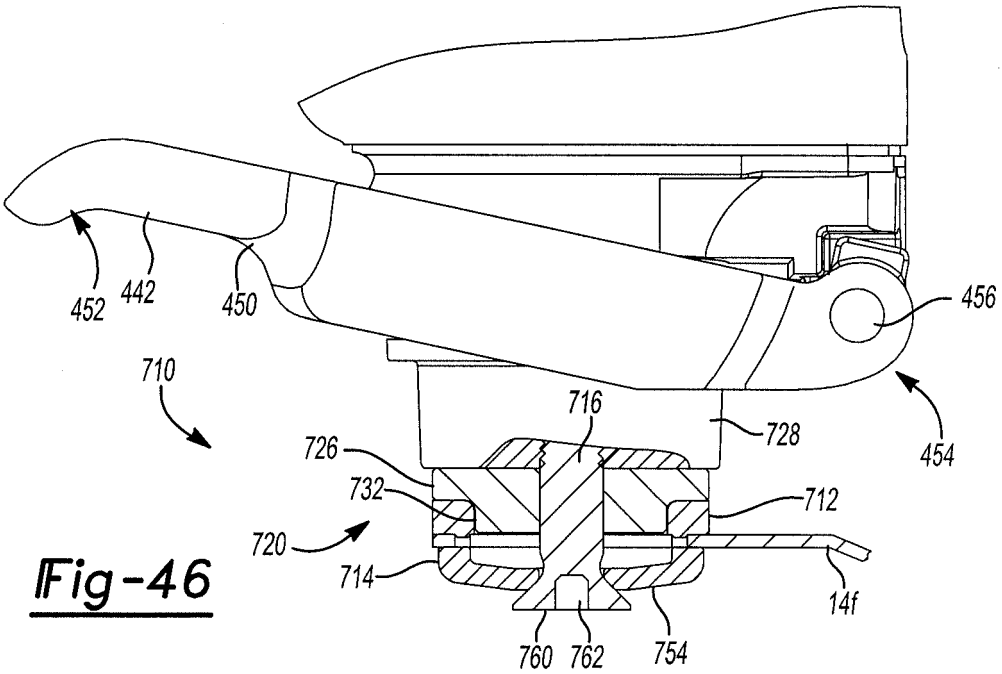
452
442
450
456
710
716
728
454
726
732
712
720
714
14f
760
762
754

Fig-46

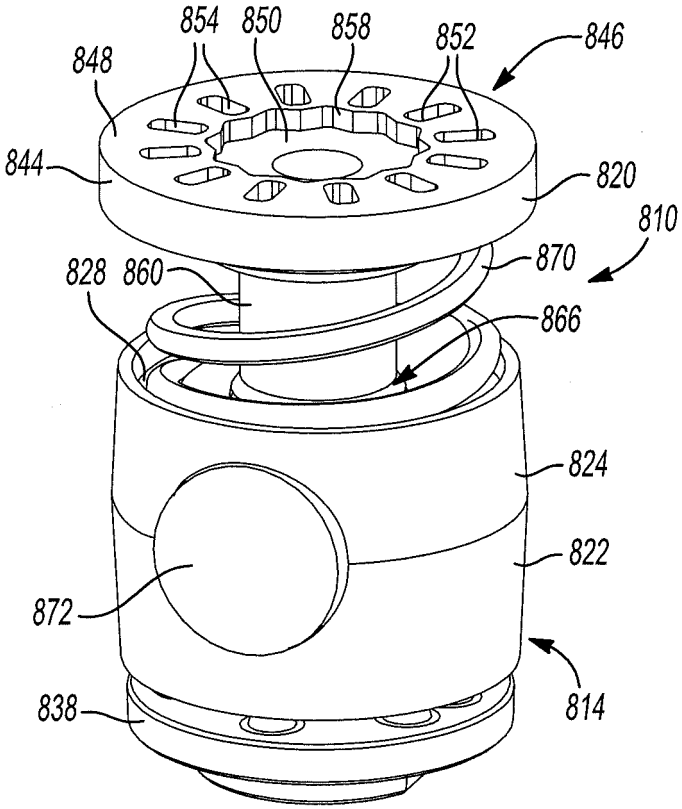
854
850
858
852
846
848
844
820
810
870
828
860
866
824
822
872
814
838

Fig-47

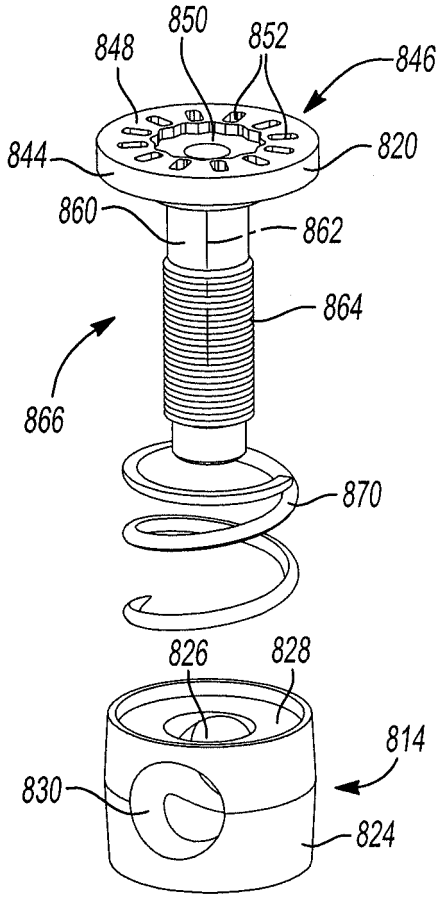
850
852
848
846
844
820
860
862
864
866
870
826
828
814
830
824

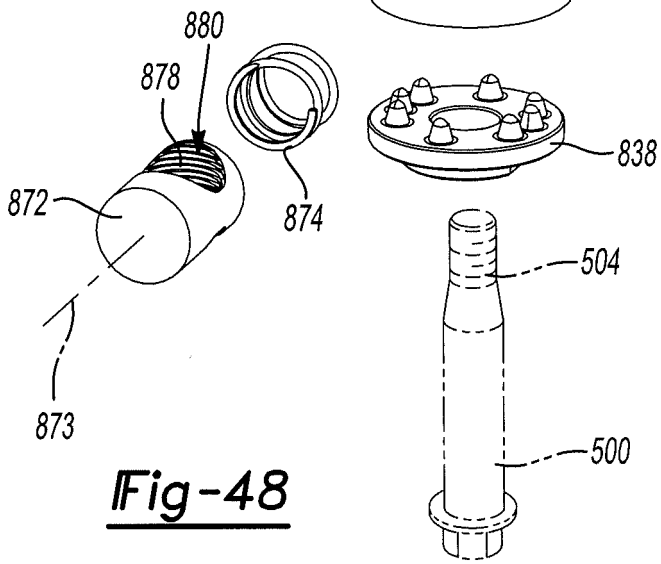
880
878
838
872
874
504
873
500

Fig-48

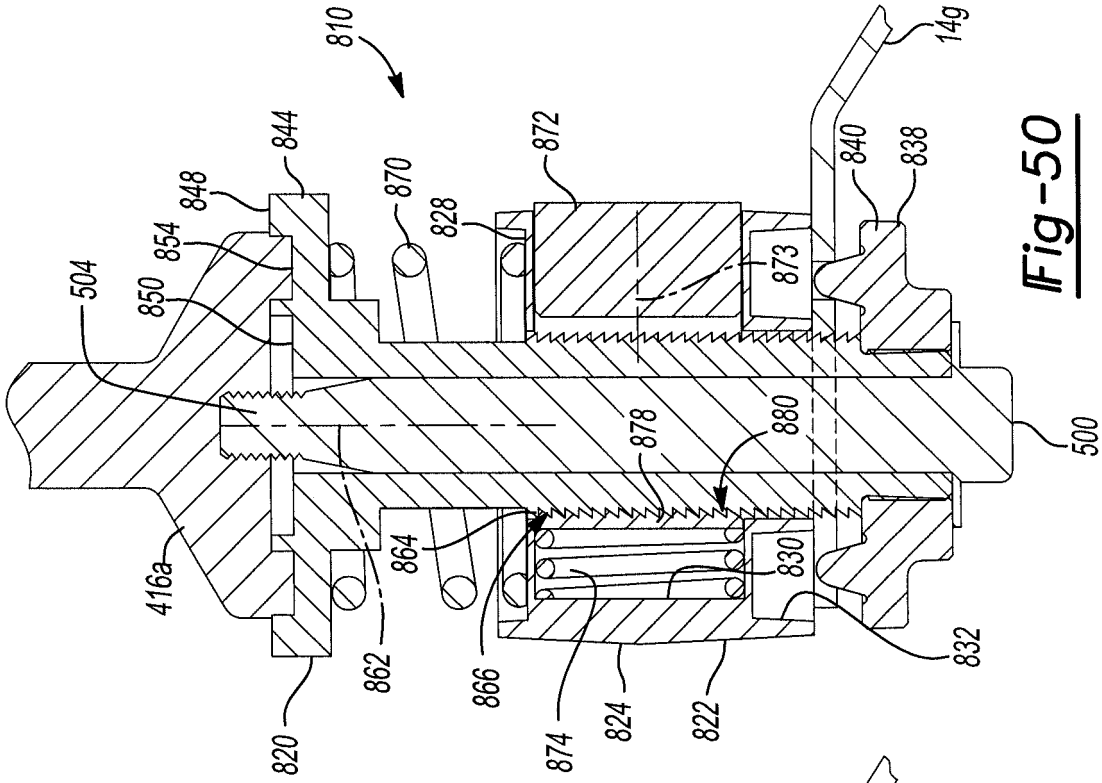
810
844
848
854
850
504
870
828
872
873
840
838
14g
500
878
880
864
830
416a
862
866
874
824
822
832
820

Fig-50

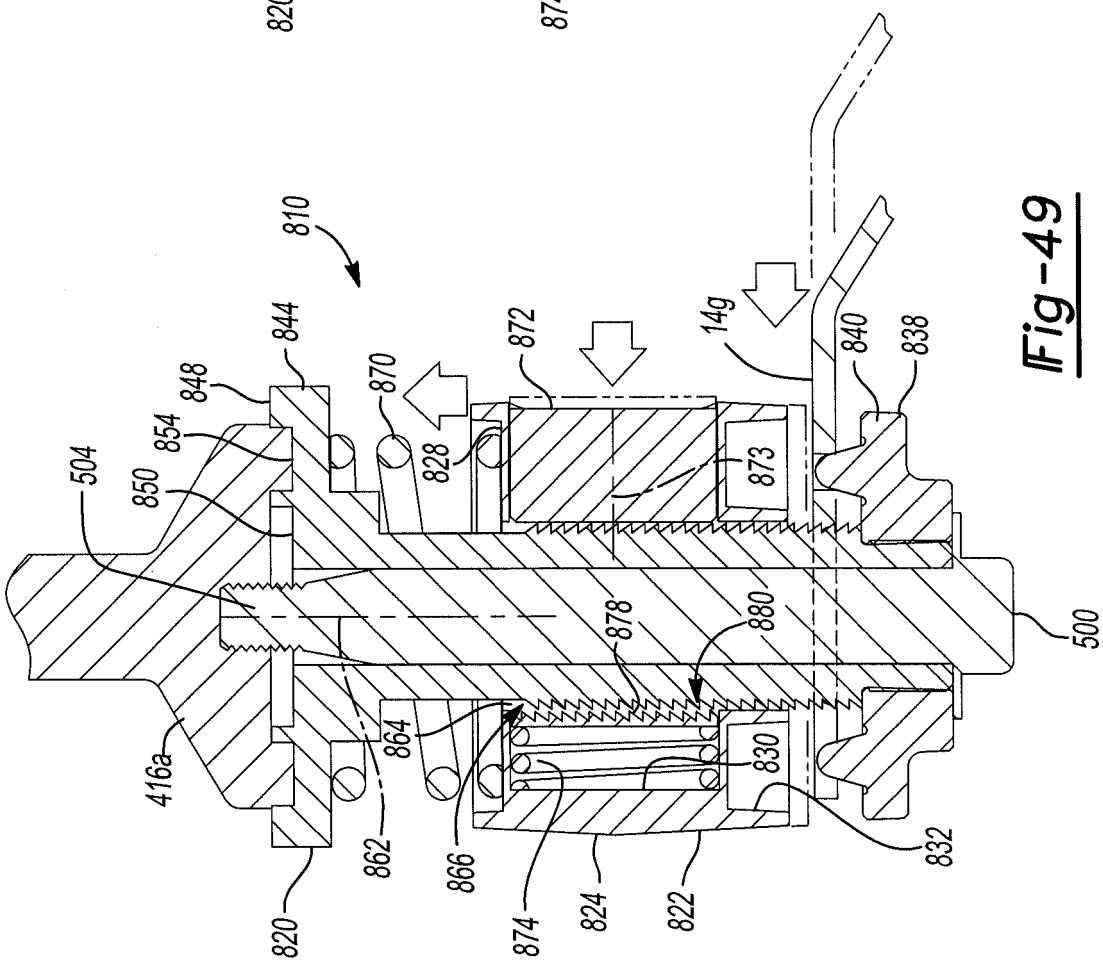
810
844
848
854
850
504
870
828
872
873
14g
840
838
500
878
880
864
830
416a
862
866
874
824
822
832
820

Fig-49

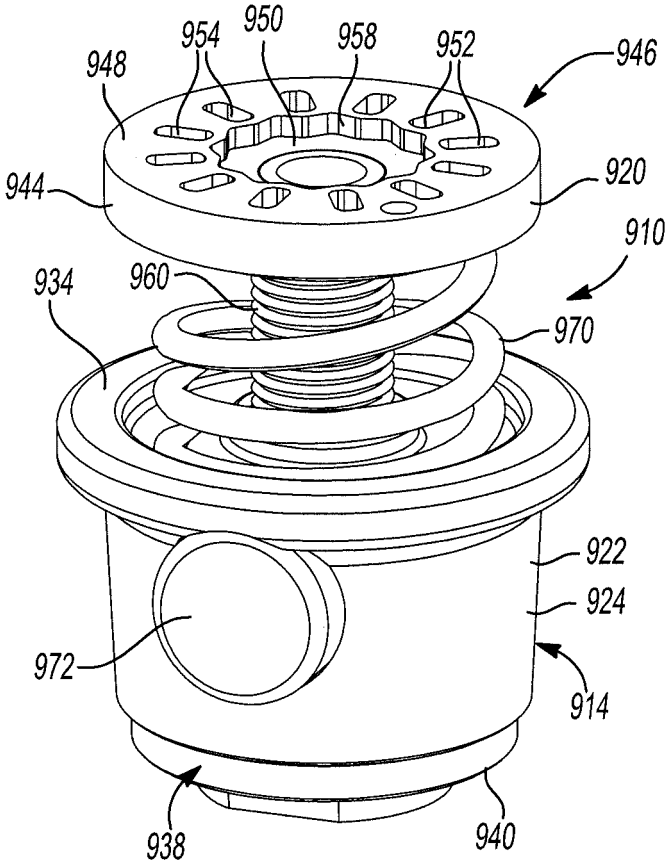
948
954
950
958
952
946
944
920
910
934
960
970
922
924
972
914
938
940

Fig-51

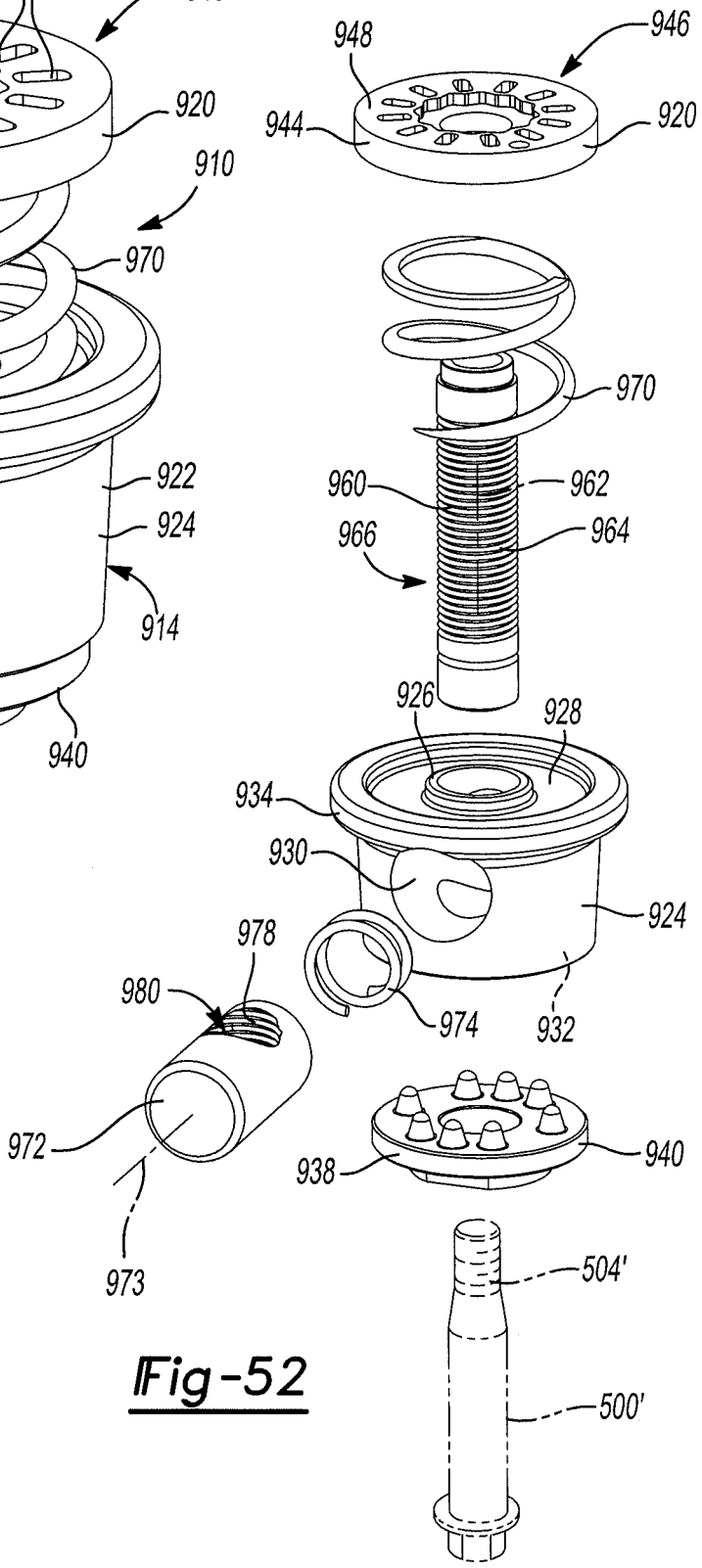
948
946
944
920
970
960
962
966
964
926
928
934
930
924
978
980
974
932
972
938
940
973
504'
500'

Fig-52

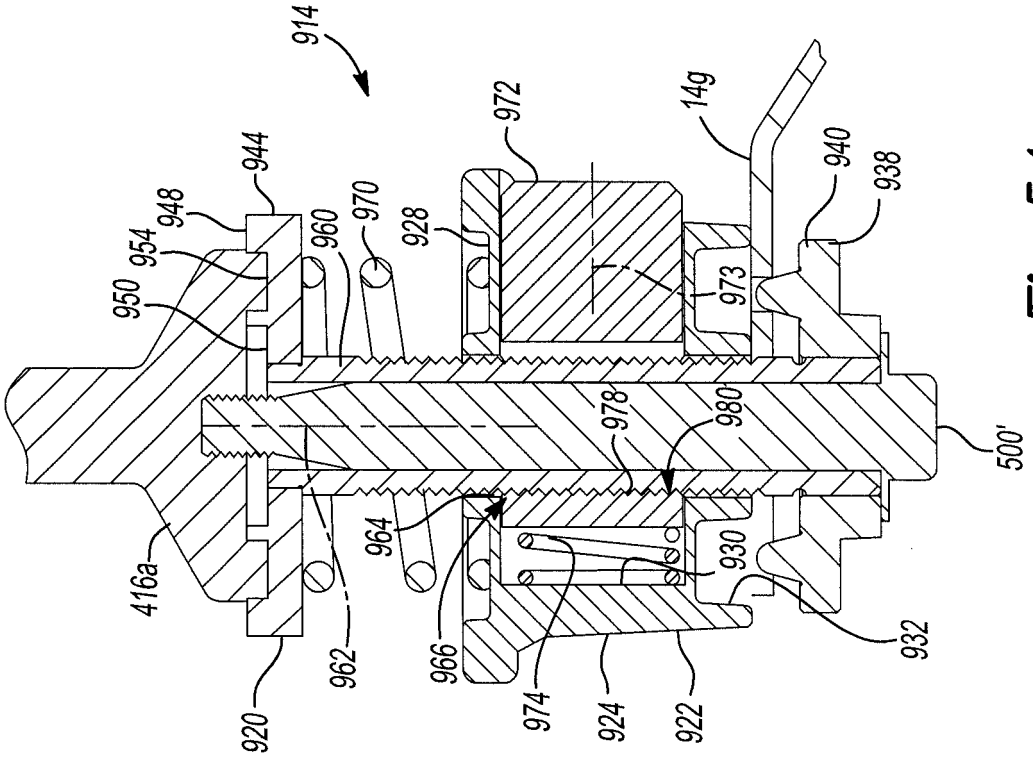
914
944
948
954
950
960
970
928
972
14g
940
938
973
978
980
500'
964
930
932
416a
962
966
974
924
922
920

Fig-54

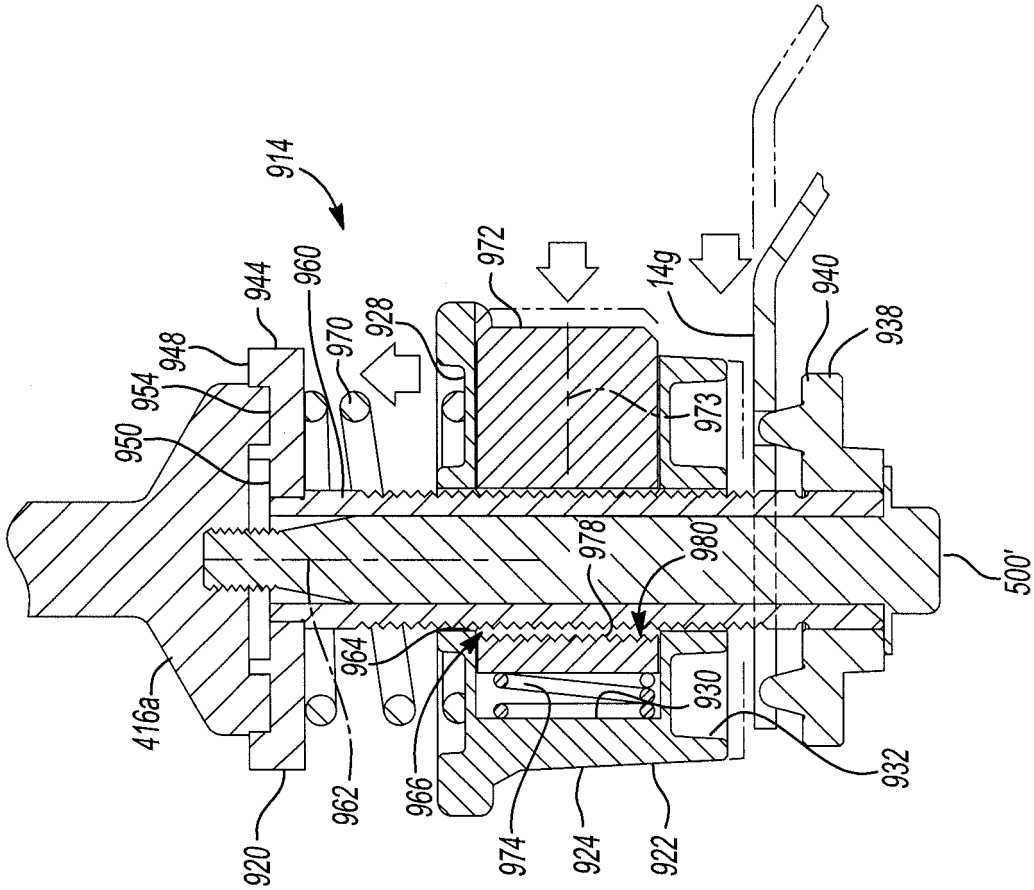
914
944
960
948
954
950
970
928
972
14g
940
938
973
978
980
500'
964
930
932
416a
962
966
974
924
922
920

Fig-53

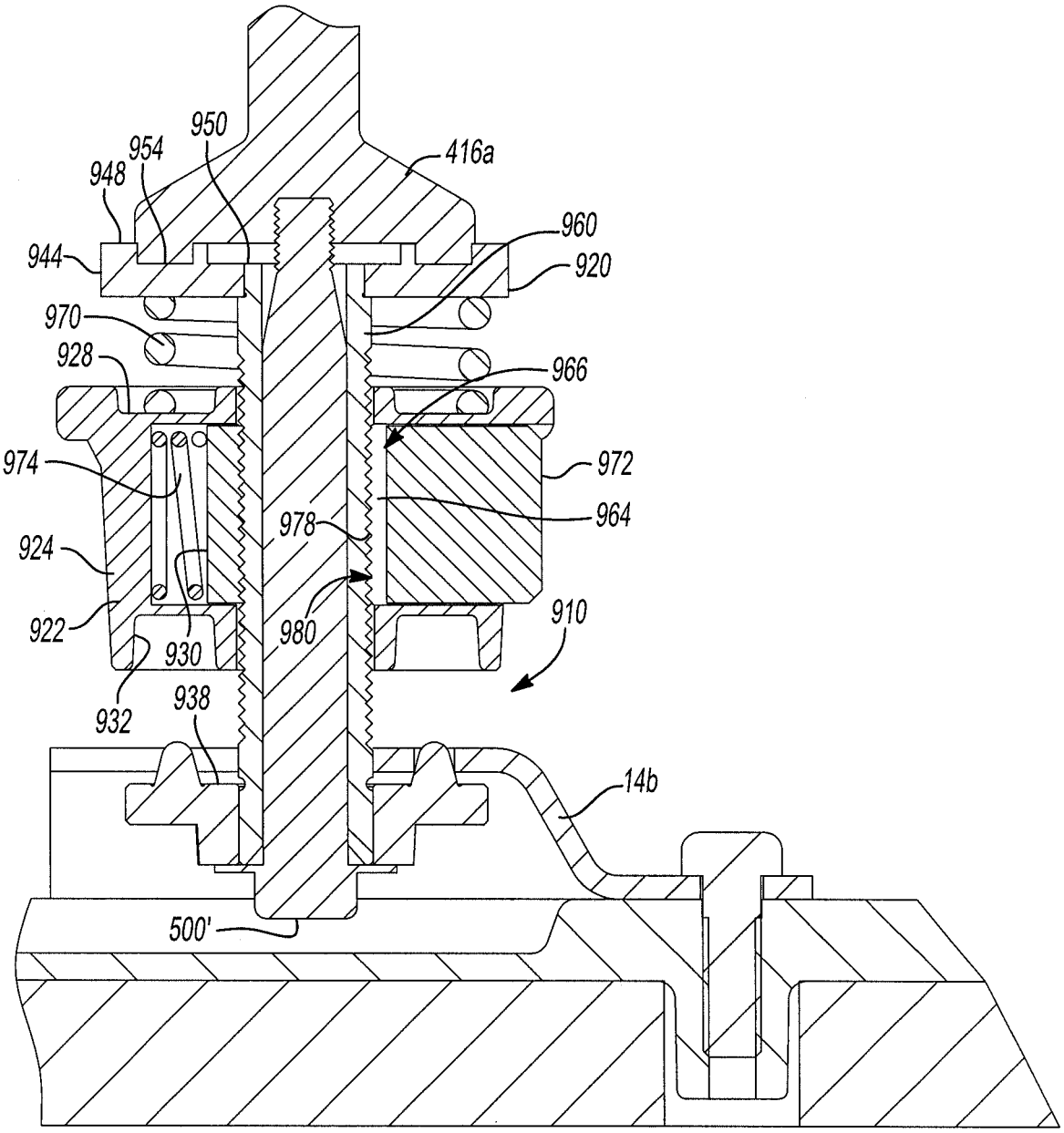
950
954
948
416a
960
944
920
970
928
966
974
972
964
978
924
910
922
980
930
932
938
14b
500'

Fig-55

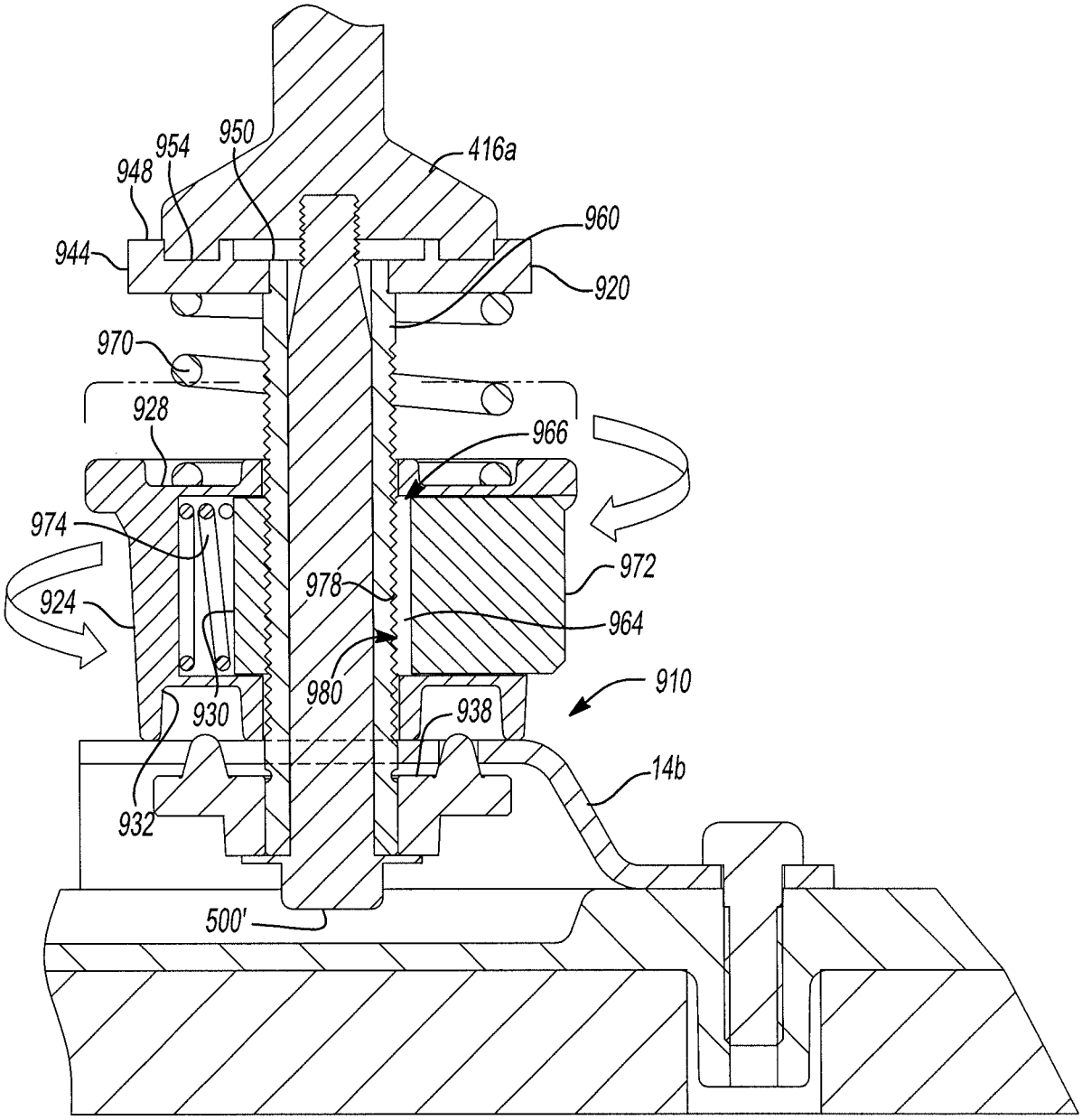
954
950
948
416a
960
944
920
970
928
966
974
972
978
924
964
980
910
930
938
14b
932
500'

Fig-56

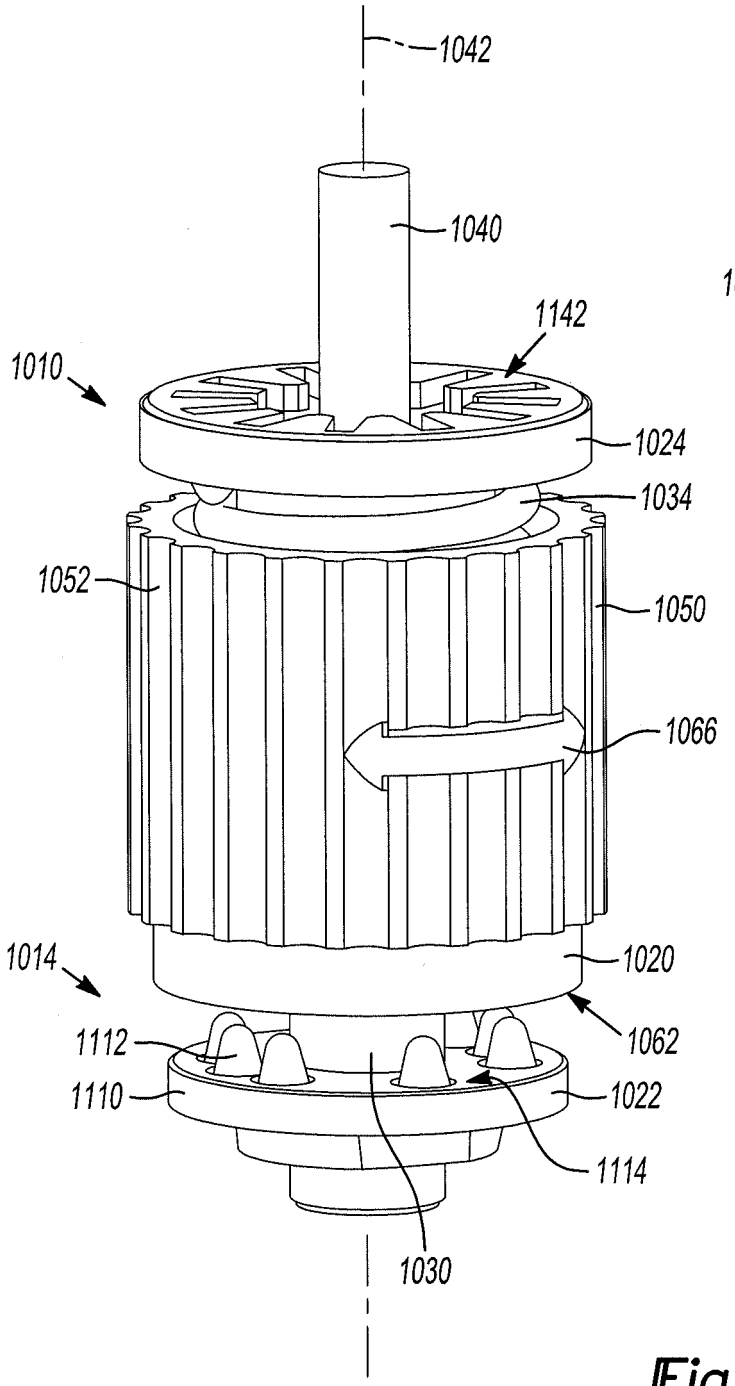
1042
1040
1142
1010
1024
1034
1052
1050
1066
1014
1020
1062
1112
1110
1022
1114
1030

Fig-57

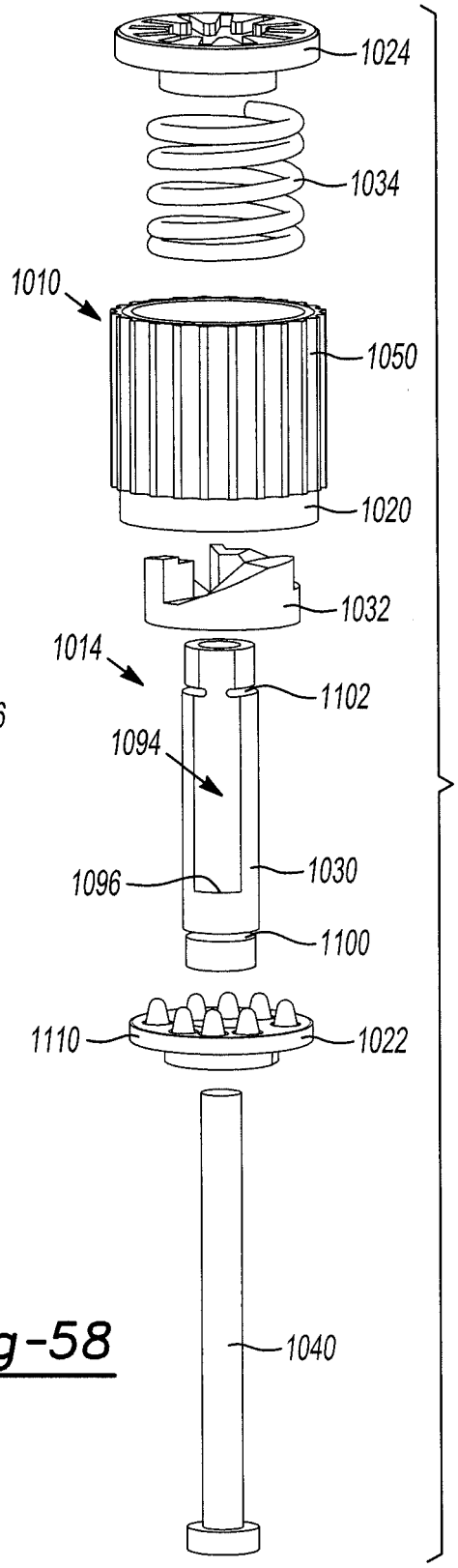
1024
1034
1010
1050
1020
1032
1014
1102
1094
1096
1030
1100
1110
1022
1040

Fig-58

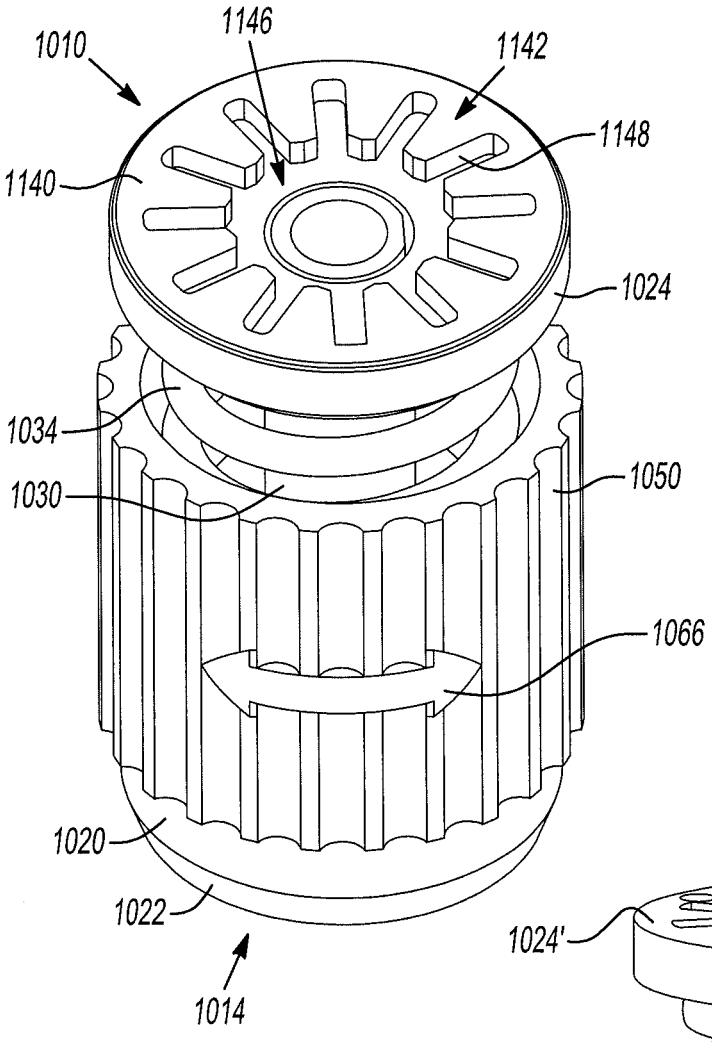
1010
1146
1142
1148
1140
1024
1034
1030
1050
1066
1020
1022
1014

Fig-59

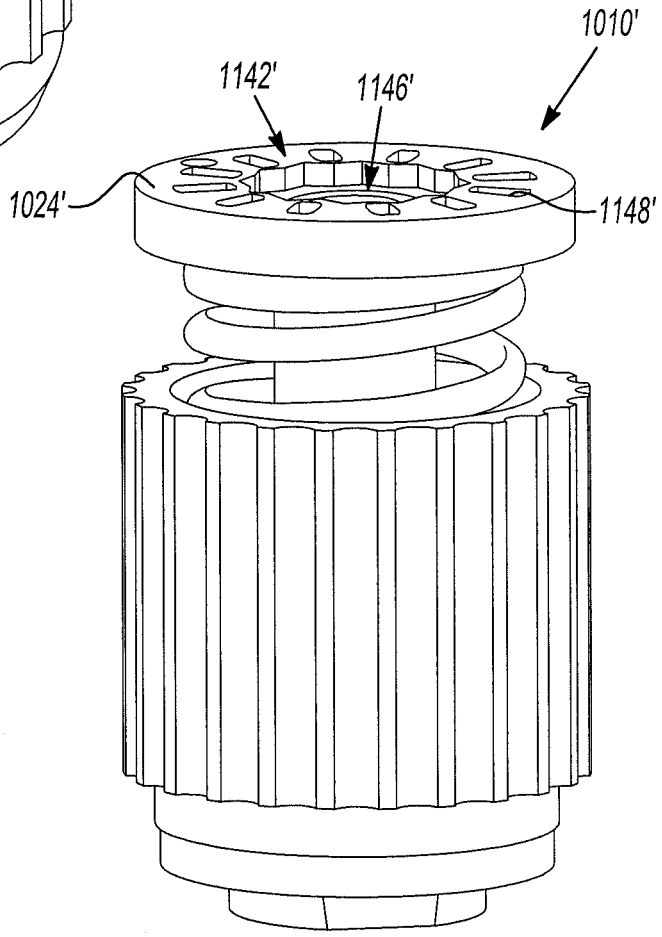
1010'
1142'
1146'
1024'
1148'

Fig-60

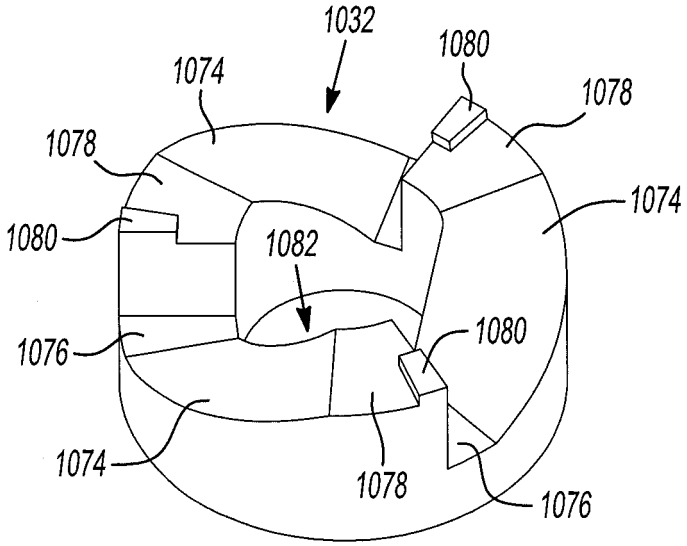

Fig-61

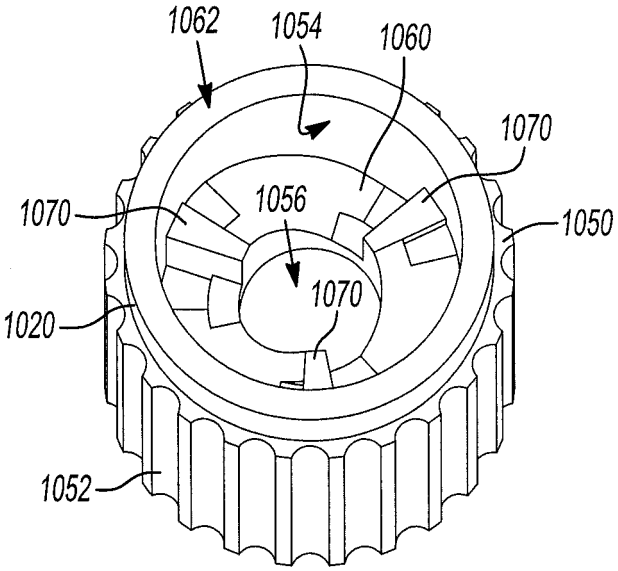

Fig-62

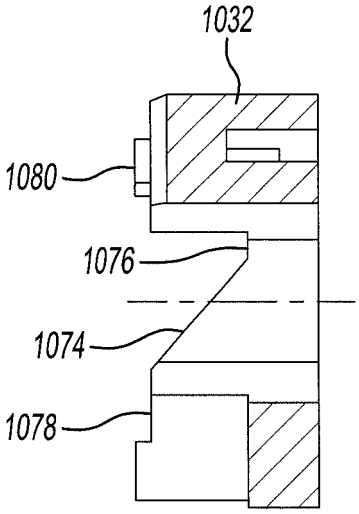

Fig-63

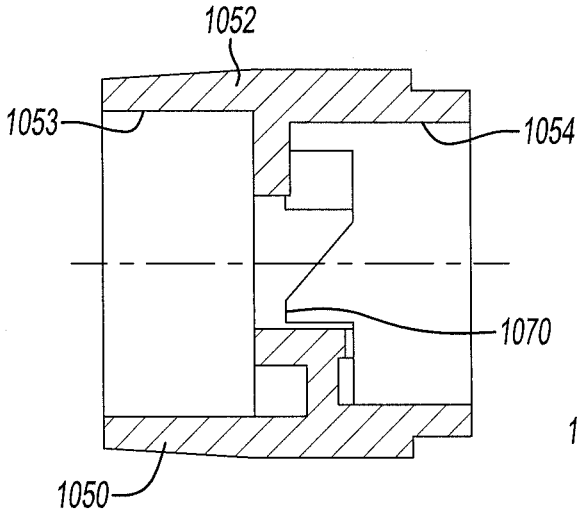

Fig-64

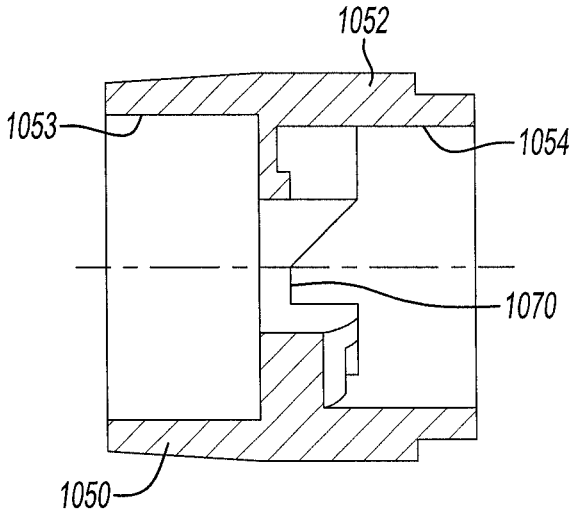

Fig-65

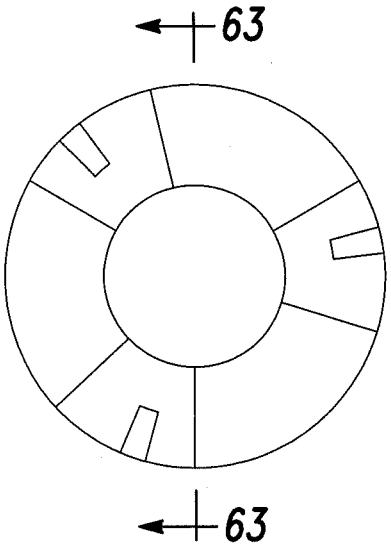

Fig-66

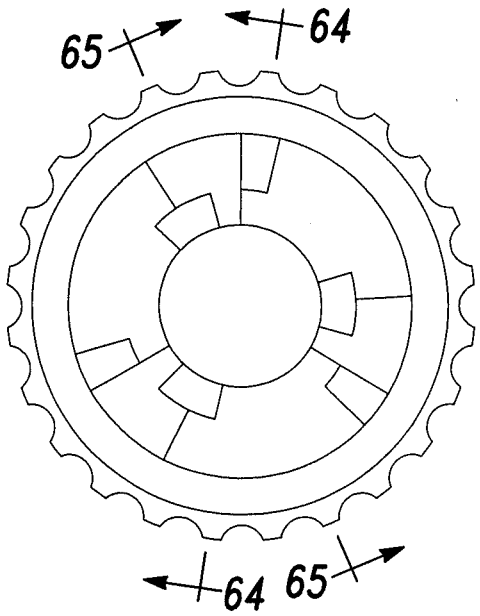

Fig-67

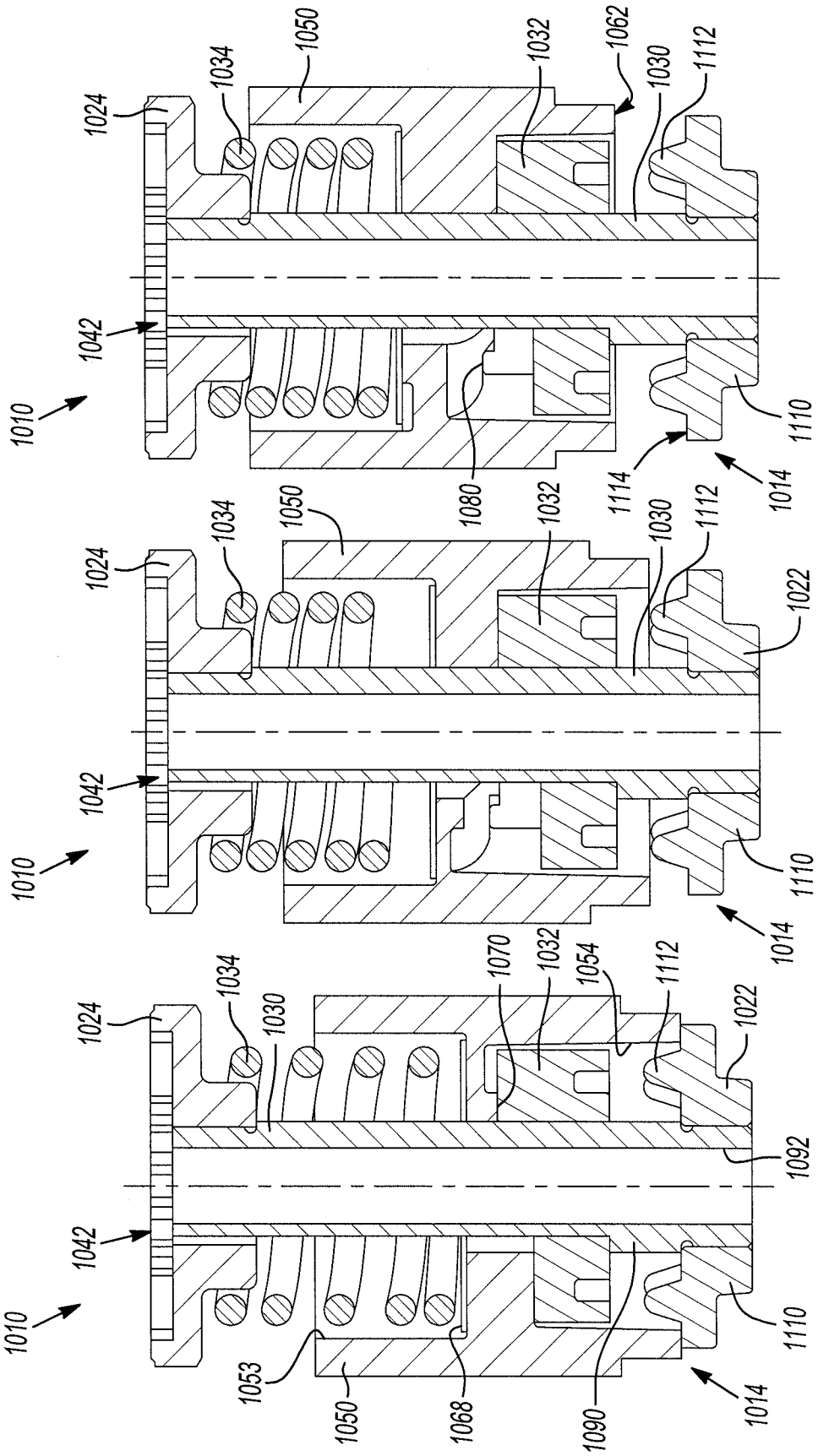

Fig-70

Fig-69

Fig-68

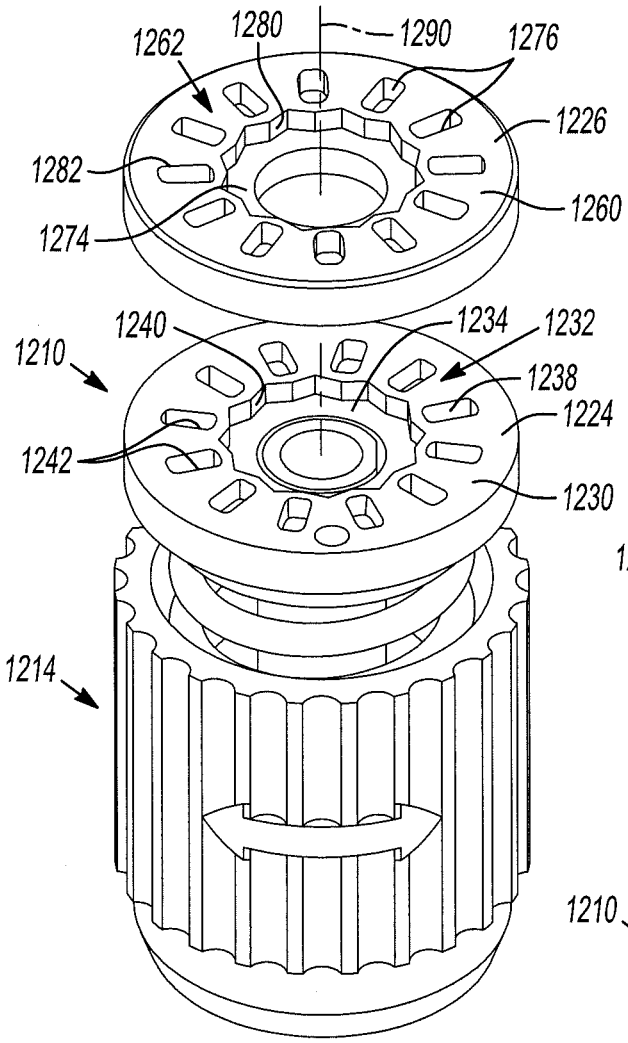
1262
1280
1290
1276
1226
1282
1260
1274
1240
1234
1232
1210
1238
1224
1242
1230
1214

Fig-71

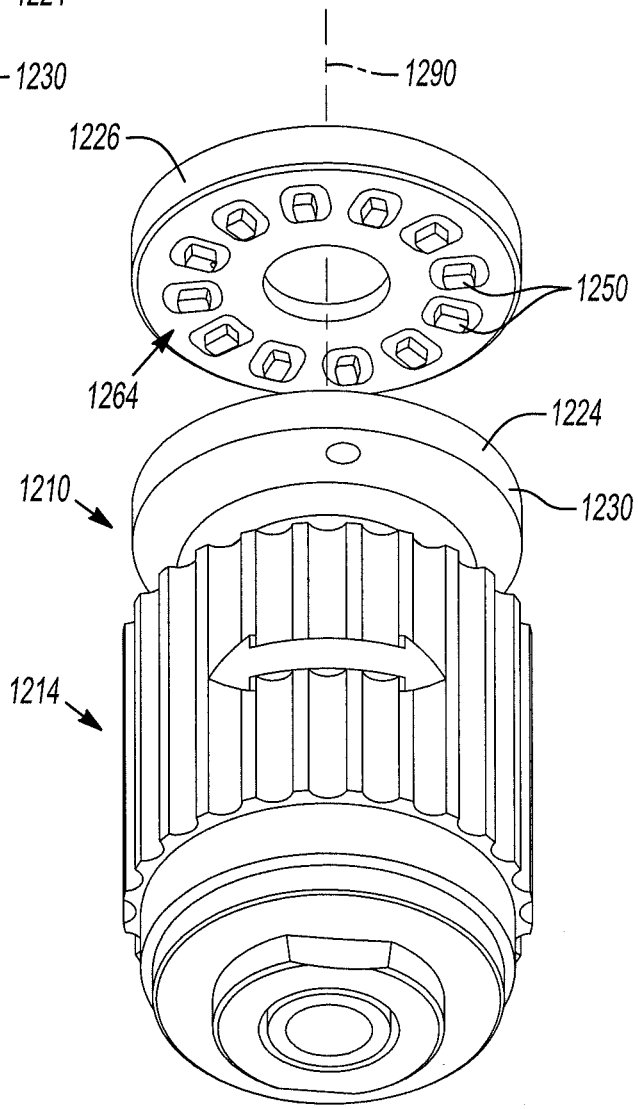
1290
1226
1250
1264
1224
1210
1230
1214

Fig-72

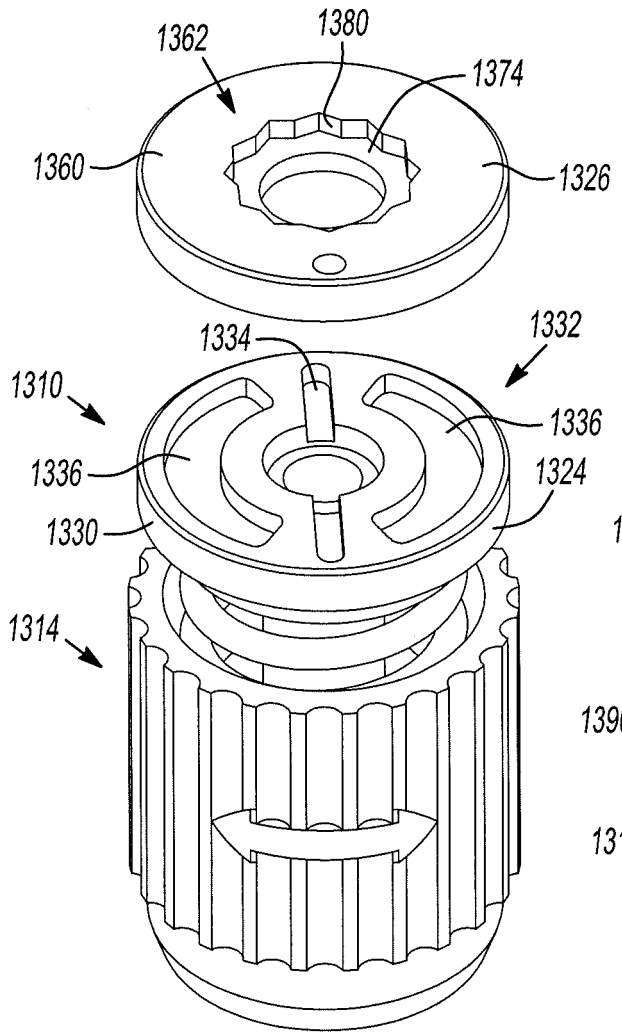
1362
1380
1374
1360
1326
1334
1332
1310
1336
1336
1324
1330
1314

Fig-73

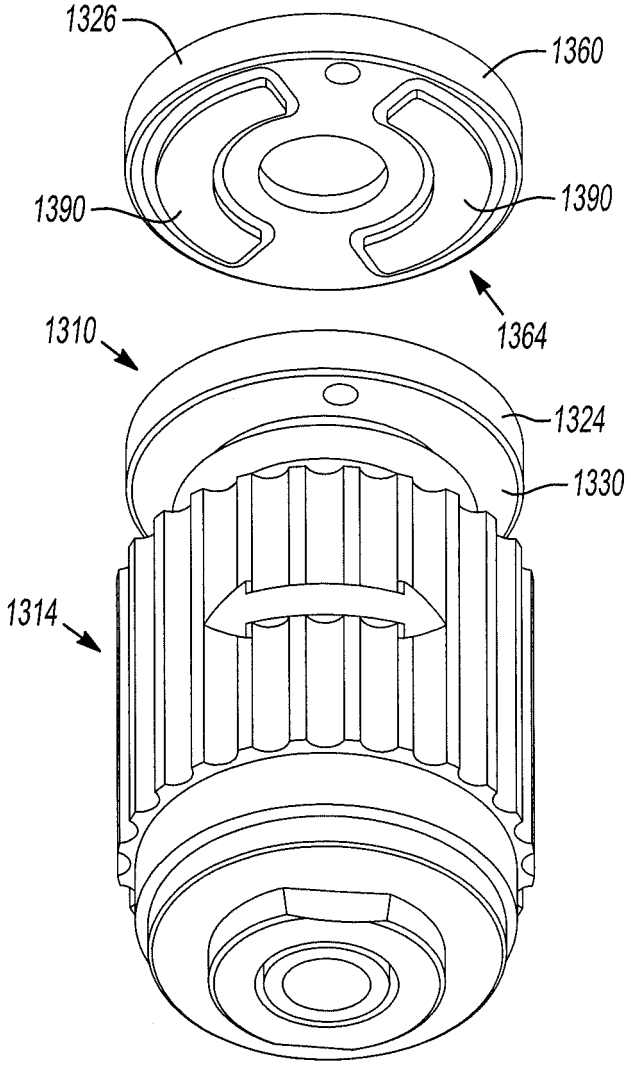
1326
1360
1390
1390
1364
1310
1324
1330
1314

Fig-74

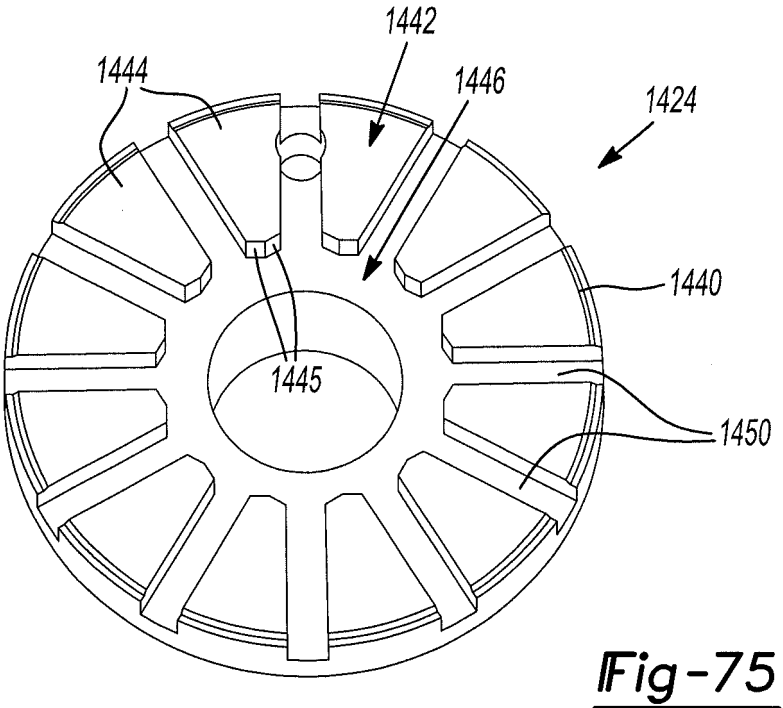
1442
1444
1446
1424
1440
1445
1450

Fig-75

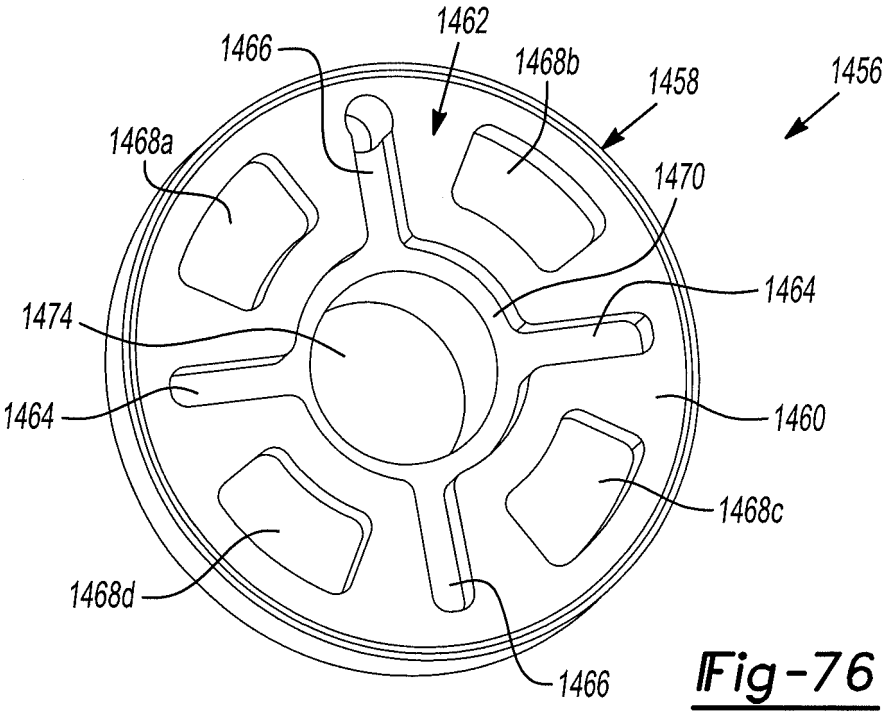
1462
1466
1468b
1458
1456
1468a
1470
1464
1474
1464
1460
1468c
1468d
1466

Fig-76

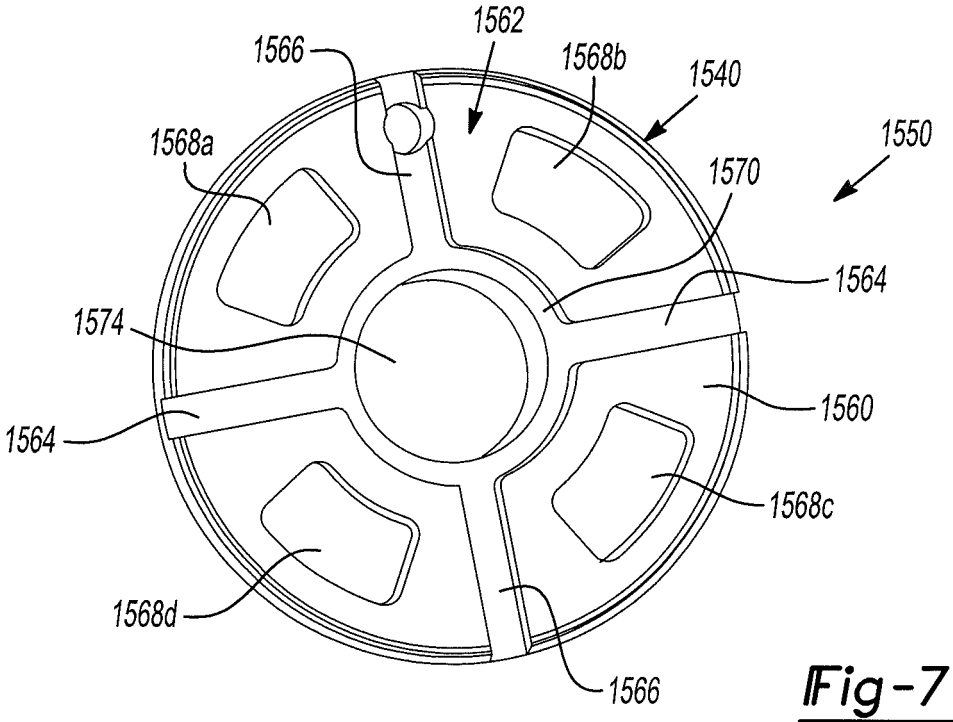
1562
1566
1568b
1540
1550
1568a
1570
1564
1574
1560
1564
1568c
1568d
1566

Fig-77

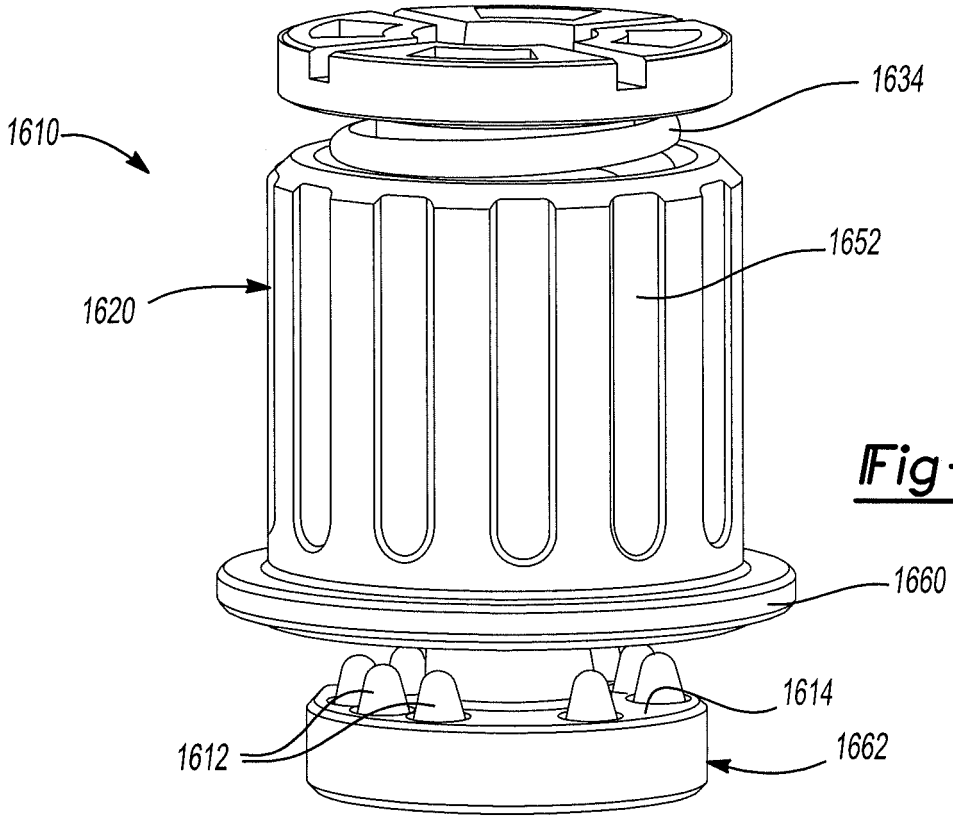
1634
1610
1652
1620
1660
1614
1612
1662

Fig-78

REFERENCES CITED IN THE DESCRIPTION

This list of references cited by the applicant is for the reader's convenience only. It does not form part of the European patent document. Even though great care has been taken in compiling the references, errors or omissions cannot be excluded and the EPO disclaims all liability in this regard.

Patent documents cited in the description

- US 20110266759 A1 **[0004]**
- DE 202011051408 U1 **[0005]**