(19) Europäisches Patentamt
European Patent Office
Office européen des brevets

(11) EP 1 440 909 B2

(12) **NEW EUROPEAN PATENT SPECIFICATION**
After opposition procedure

(45) Date of publication and mention of the opposition decision:
03.11.2010 Bulletin 2010/44

(45) Mention of the grant of the patent:
13.12.2006 Bulletin 2006/50

(21) Application number: **04250377.1**

(22) Date of filing: **23.01.2004**

(51) Int Cl.:
B65B 43/42 *(2006.01)* ***B65B 59/00*** *(2006.01)*
B65D 85/804 *(2006.01)*

(54) **Cartridge system for the preparation of beverages and method of manufacturing said system**

Patronensystem zur Zubereitung von Getränken und Verfahren zur Herstellung von diesem System

Système de cartouche pour la préparation de boissons et méthode de fabrication de ce système

(84) Designated Contracting States:
AT BE BG CH CY CZ DE DK EE ES FI FR GB GR HU IE IT LI LU MC NL PT RO SE SI SK TR

(30) Priority: **24.01.2003 GB 0301745**

(43) Date of publication of application:
28.07.2004 Bulletin 2004/31

(73) Proprietor: **Kraft Foods R&D, Inc.**
81737 Munich (DE)

(72) Inventors:
- **Halliday, Andrew**
  Banbury OX16 7QU (GB)
- **Ballard, Colin**
  Banbury OX16 7QU (GB)
- **Panesar, Satwinder**
  Banbury OX16 7QU (GB)

(74) Representative: **Thomson, Neil David et al**
Boult Wade Tennant
Verulam Gardens
70 Gray's Inn Road
London WC1X 8BT (GB)

(56) References cited:
EP-A- 1 101 430 **WO-A-02/44956**
WO-A-02/074661 **WO-A-03/059778**
FR-A- 2 322 796 **US-A- 5 242 702**

EP 1 440 909 B2

Description

[0001] The present invention relates to a cartridge system for the preparation of beverages and, in particular, to sealed cartridges which are formed from substantially air- and water-impermeable materials and which contain one or more ingredients for the preparation of beverages. There is also disclosed a method of manufacturing a cartridge system.

[0002] It has previously been proposed to seal beverage preparation ingredients in individual air-impermeable packages. For example, cartridges or capsules containing compacted ground coffee are known for use in certain coffee preparation machines which are generally termed "espresso" machines. In the production of coffee using these preparation machines the coffee cartridge is placed in a brewing chamber and hot water is passed though the cartridge at relatively high pressures, thereby extracting the aromatic coffee constituents from the ground coffee to produce the coffee beverage. Typically, such machines operate at a pressure of greater than 6 x 10^5 Pa. The preparation machines of the type described have to date been relatively expensive since components of the machine, such as the water pumps and seals, must be able to withstand the high pressures.

[0003] US5242702 describes a beverage cartridge comprising an outer member and an inner member and a lid.

[0004] In WO01/58786 there is described a cartridge for the preparation of beverages which operates at a pressure generally in the range 0.7 to 2.0 x 10^5 Pa. However, the cartridge is designed for use in a beverage preparation machine for the commercial or industrial market and is relatively expensive and not able to dispense many beverage types. Hence, there remains a requirement for a system for the preparation of beverages wherein the cartridges and beverage preparation machine of the system are suitable, in particular, for the domestic market in terms of cost, performance and reliability. There is also a need for a beverage preparation machine for such a system which is simple to operate and reliable in operation and can produce a wide range of beverage types.

[0005] Accordingly, the present invention provides a method of manufacturing a cartridge for dispensation of a beverage as defined in claim 1 of the claims appended hereto.

[0006] It will be understood that by the term "cartridge" as used herein is meant any package, container, sachet or receptacle which contains one or more beverage ingredients in the manner described. The cartridge may be rigid, semi-rigid or flexible.

[0007] The cartridge of the present invention contains one or more beverage ingredients suitable for the formation of a beverage product. The beverage product may be, for example, one of coffee, tea, chocolate or a dairy-based beverage including milk. The beverage ingredients may be powdered, ground, leaf-based or liquid. The beverage ingredients may be insoluble or soluble. Examples include roast and ground coffee, leaf tea, powdered cocoa solids and soup, liquid milk-based beverages, carbonated drinks and concentrated fruit juices.

[0008] The method of manufacture of the present invention provides an economical means for producing cartridges for the dispensation of one of a plurality of beverages. Advantageously, the cartridge is easily assembled from the main components of the inner member, the outer member, the beverage ingredient and the lid. Different types of outer member, inner member and lid are manufactured depending on the beverage ingredient to be dispensed. However, the differing types of inner member, outer member and lid are interchangeable so that individual cartridges may be assembled from specific combinations of the stock components. This results in a reduced number of total components that need to be manufactured without affecting the flexibility of the type of cartridges that can be produced. For example, the same type of outer member may be used for dispensing filter coffee and espresso-style coffee.

[0009] The cost of manufacturing the range of beverage cartridges is reduced by using interchangeable components. In addition, the types of outer member share substantially the same external shape and configuration so that all cartridges in the range can be dispensed using the same beverage preparation machine.

[0010] Optionally the method further comprises in step b. joining a filter member to the first type and/or second type of inner member.

[0011] The first type of outer member may be suitable for containing roast and ground beverage ingredients or the like. The second type of outer member may be suitable for containing soluble or liquid beverage ingredients or the like.

[0012] The first type of inner member is suitable for filtering roast and ground beverage ingredients and the like. The second type of inner member is suitable for filtering roast and ground beverage ingredients and the like and for entraining a plurality of air bubbles in the dispensed beverage.

[0013] The first and second type of inner member may comprise a frame having a filter disposed thereupon, and wherein a peripheral rim of the frame is conjoined to the selected type of outer member by welding.

[0014] By using separate components for the inner and outer members which are then conjoined on assembly by a welding process the manufacture of each component and the assembly of the cartridge can be optimised. This is particularly advantageous in the present cartridge where very small tolerances are desirable since the beverage flow path through the cartridge is defined by the interface between the outer member and the inner member. In addition the components of the inner member and the outer member may more easily be sterilised prior to assembly when they are separated. Once the components are welded together a number of small-apertured, tortuous pathways are created which cannot effectively be sterilised using known methods. The ability to sterilise the components is a particularly

advantageous feature where the cartridges are used for dispensing dairy-based beverages. A welded arrangement provides a quick to assemble but secure method of conjoining the inner member and outer member. Advantageously, the welding method avoids the need for glues or other such adhesives in the interior of the cartridge which will be exposed to the beverage ingredients.

[0015] Preferably, the second type of inner member comprises means for producing a jet of the beverage, which means comprises an aperture in a beverage flow path between an inlet and an outlet of the cartridge.

[0016] Preferably, the method further comprises manufacturing and storing a third type of inner member. The third type of inner member may be suitable for dispensing soluble beverage ingredients and the like.

[0017] Preferably, the method further comprises manufacturing and storing a fourth type of inner member. The fourth type of inner member may be suitable for dispensing a liquid beverage ingredients and the like.

[0018] The third or fourth type of inner member may comprise a skirt surrounding an outlet, the skirt comprising an upper extension having an upper rim which engages, on assembly of the cartridge, a co-operating formation of the selected type of outer member to form a snap-fit arrangement for conjoining the third or fourth type of inner member to the selected type of outer member.

[0019] The present invention also provides a cartridge system as defined in claim 12, wherein each cartridge comprises an outer member, an inner member, one or more beverage ingredients and a lid, characterised in that the first and second types of inner member are interchangeable.

[0020] In the following description the terms "upper" and "lower" and equivalents will be used to describe the relational positioning of features of the invention. The terms "upper" and "lower" and equivalents should be understood to refer to the cartridge (or other components) in its normal orientation for insertion into a beverage preparation machine and subsequent dispensing as shown, for example, in Figure 4. In particular, "upper" and "lower" refer, respectively, to relative positions nearer or further from a top surface 11 of the cartridge. In addition, the terms "inner" and "outer" and equivalents will be used to describe the relational positioning of features of the invention. The terms "inner" and "outer" and equivalents should be understood to refer to relative positions in the cartridge (or other components) being, respectively, nearer or further from a centre or major axis X of the cartridge 1 (or other component).

[0021] Embodiments of the present invention will now be described, by way of example only, with reference to the accompanying drawings, in which:

Figure 1 is cross-sectional drawing of an outer member of first and second embodiments of cartridge according to the present invention;
Figure 2 is a cross-sectional drawing of a detail of the outer member of Figure 1 showing an inwardly directed cylindrical extension;
Figure 3 is a cross-sectional drawing of a detail of the outer member of Figure 1 showing a slot;
Figure 4 is a perspective view from above of the outer member of Figure 1;
Figure 5 is a perspective view from above of the outer member of Figure 1 in an inverted orientation;
Figure 6 is a plan view from above of the outer member of Figure 1;
Figure 7 is a cross-sectional drawing of an inner member of the first embodiment of cartridge;
Figure 8 is a perspective view from above of the inner member of Figure 7;
Figure 9 is a perspective view from above of the inner member of Figure 7 in an inverted orientation;
Figure 10 is a plan view from above of the inner member of Figure 7;
Figure 11 is a cross-sectional drawing of the first embodiment of cartridge in an assembled condition;
Figure 12 is a cross-sectional drawing of an inner member of the second embodiment of cartridge;
Figure 13 is a cross-sectional drawing of a detail of the inner member of Figure 12 showing an aperture;
Figure 14 is a perspective view from above of the inner member of Figure 12;
Figure 15 is a perspective view from above of the inner member of Figure 12 in an inverted orientation;
Figure 16 is another cross-sectional drawing of the inner member of Figure 12;
Figure 17 is a cross-sectional drawing of another detail of the inner member of Figure 12 showing an air inlet;
Figure 18 is a cross-sectional drawing of the second embodiment of cartridge in an assembled condition;
Figure 19 is cross-sectional drawing of an outer member of third and fourth embodiments of cartridge according to the present invention;
Figure 20 is a cross-sectional drawing of a detail of the outer member of Figure 19 showing an inwardly directed cylindrical extension;
Figure 21 is a plan view from above of the outer member of Figure 19;
Figure 22 is a perspective view from above of the outer member of Figure 19;
Figure 23 is a perspective view from above of the outer member of Figure 19 in an inverted orientation;
Figure 24 is a cross-sectional drawing of an inner member of the third embodiment of cartridge;
Figure 25 is a plan view from above of the inner member of Figure 24;
Figure 26 is a cross-sectional drawing of a detail of the inner member of Figure 24 showing an in-turned upper rim;

Figure 27 is a perspective view from above of the inner member of Figure 24;
Figure 28 is a perspective view from above of the inner member of Figure 24 in an inverted orientation;
Figure 29 is a cross-sectional drawing of the third embodiment of cartridge in an assembled condition;
Figure 30 is a cross-sectional drawing of an inner member of the fourth embodiment of cartridge;
Figure 31 is a plan view from above of the inner member of Figure 30;
Figure 32 is a perspective view from above of the inner member of Figure 30;
Figure 33 is a perspective view from above of the inner member of Figure 30 in an inverted orientation;
Figure 34 is a cross-sectional drawing of the fourth embodiment of cartridge in an assembled condition;
Figure 35a is a graph of concentration vs. operating cycle time;
Figure 35b is a graph of foamability vs. operating cycle time; and
Figure 35c is a graph of temperature vs. operating cycle time.

[0022] As shown in Figure 11, the cartridge 1 of the present invention generally comprises an outer member 2, an inner member 3 and a laminate 5. The outer member 2, inner member 3 and laminate 5 are assembled to form the cartridge 1 which has an interior 120 for containing one or more beverage ingredients, an inlet 121, an outlet 122 and a beverage flow path linking the inlet 121 to the outlet 122 and which passes through the interior 120. The inlet 121 and outlet 122 are initially sealed by the laminate 5 and are opened in use by piercing or cutting of the laminate 5. The beverage flow path is defined by spatial inter-relationships between the outer member 2, inner member 3 and laminate 5 as discussed below. Other components may optionally be included in the cartridge 1, such as a filter 4, as will be described further below.

[0023] A first version of cartridge 1 is shown in Figures 1 to 11. The first version of the cartridge 1 is particularly designed for use in dispensing filtered products such as roast and ground coffee or leaf tea. However, this version of the cartridge 1 and the other versions described below may be used with other products such as chocolate, coffee, tea, sweeteners, cordials, flavourings, alcoholic beverages, flavoured milk, fruit juices, squashes, sauces and desserts.

[0024] As can be seen from Figure 5, the overall shape of the cartridge 1 is generally circular or disc-shaped with the diameter of the cartridge 1 being significantly greater than its height. A major axis X passes through the centre of the outer member as shown in Figure 1. Typically the overall diameter of the outer member 2 is 74.5 mm ±6mm and the overall height is 16 mm ±3mm. Typically the volume of the cartridge 1 when assembled is 30.2 ml ±20%.

[0025] The outer member 2 generally comprises a bowl-shaped shell 10 having a curved annular wall 13, a closed top 11 and an open bottom 12. The diameter of the outer member 2 is smaller at the top 11 compared to the diameter at the bottom 12, resulting from a flaring of the annular wall 13 as one traverses from the closed top 11 to the open bottom 12. The annular wall 13 and closed bottom 11 together define a receptacle having an interior 34.

[0026] A hollow inwardly directed cylindrical extension 18 is provided in the closed top 11 centred on the major axis X. As more clearly shown in Figure 2, the cylindrical extension 18 comprises a stepped profile having first, second and third portions 19, 20 and 21. The first portion 19 is right circular cylindrical. The second portion 20 is frusto-conical in shape and is inwardly tapered. The third portion 21 is another right circular cylinder and is closed off by a lower face 31. The diameter of the first, second and third portion 19, 20 and 21 incrementally decreases such that the diameter of the cylindrical extension 18 decreases as one traverses from the top 11 to the closed lower face 31 of the cylindrical extension 18. A generally horizontal shoulder 32 is formed on the cylindrical extension 18 at the junction between the second and third portions 20 and 21.

[0027] An outwardly extending shoulder 33 is formed in the outer member 2 towards the bottom 12. The outwardly extending shoulder 33 forms a secondary wall 15 co-axial with the annular wall 13 so as to define an annular track forming a manifold 16 between the secondary wall 15 and the annular wall 13. The manifold 16 passes around the circumference of the outer member 2. A series of slots 17 are provided in the annular wall 13 level with the manifold 16 to provide gas and liquid communication between the manifold 16 and the interior 34 of the outer member 2. As shown in Figure 3, the slots 17 comprise vertical slits in the annular wall 13. Between 20 and 40 slots are provided. In the embodiment shown thirty-seven slots 17 are provided generally equi-spaced around the circumference of the manifold 16. The slots 17 are preferably between 1.4 and 1.8 mm in length. Typically the length of each slot is 1.6 mm representing 10% of the overall height of the outer member 2. The width of each slot is between 0.25 and 0.35 mm. Typically, the width of each slot is 0.3 mm. The width of the slots 17 is sufficiently narrow to prevent the beverage ingredients passing therethrough into the manifold 16 either during storage or in use.

[0028] An inlet chamber 26 is formed in the outer member 2 at the periphery of the outer member 2. A cylindrical wall 27 is provided, as most clearly shown in Figure 5, which defines the inlet chamber 26 within, and partitions the inlet chamber 26 from, the interior 34 of the outer member 2. The cylindrical wall 27 has a closed upper face 28 which is formed on a plane perpendicular to the major axis X and an open lower end 29 co-planar with the bottom 12 of the outer member 2. The inlet chamber 26 communicates with the manifold 16 via two slots 30 as shown in Figure 1. Alternatively, between one and four slots may be used to communicate between the manifold 16 and the inlet chamber 26.

[0029] A lower end of the outwardly extending shoulder 33 is provided with an outwardly extending flange 35 which

extends perpendicularly to the major axis X. Typically the flange 35 has a width of between 2 and 4 mm. A portion of the flange 35 is enlarged to form a handle 24 by which the outer member 2 may be held. The handle 24 is provided with an upturned rim 25 to improve grip.

[0030] The outer member 2 is formed as a single integral piece from high density polyethylene, polypropylene, polystyrene, polyester, or a laminate of two or more of these materials. A suitable polypropylene is the range of polymers available from DSM UK Limited (Redditch, United Kingdom). The outer member may be opaque, transparent or translucent. The manufacturing process may be injection moulding.

[0031] The inner member 3 as shown in Figures 7 to 10, comprises an annular frame 41 and a downwardly extending cylindrical funnel 40. A major axis X passes through the centre of the inner member 3 as shown in Figure 7.

[0032] As best shown in Figure 8, the annular frame 41 comprises an outer rim 51 and an inner hub 52 joined by ten equi-spaced radial spokes 53. The inner hub 52 is integral with and extends from the cylindrical funnel 40. Filtration apertures 55 are formed in the annular frame 41 between the radial spokes 53. A filter 4 is disposed on the annular frame 41 so as to cover the filtration apertures 55. The filter is preferably made from a material with a high wet strength, for example a non-woven fibre material of polyester. Other materials which may be used include a water-impermeable cellulosic material, such as a cellulosic material comprising woven paper fibres. The woven paper fibres may be admixed with fibres of polypropylene, polyvinyl chloride and/or polyethylene. The incorporation of these plastic materials into the cellulosic material renders the cellulosic material heat-sealable. The filter 4 may also be treated or coated with a material which is activated by heat and/or pressure so that it can be sealed to the annular frame 41 in this way.

[0033] As shown in the cross-sectional profile of Figure 7, the inner hub 52 is located at a lower position than the outer rim 51, resulting in the annular frame 41 having a sloping lower profile.

[0034] The upper surface of each spoke 53 is provided with an upstanding web 54 which divides a void space above the annular frame 41 into a plurality of passages 57. Each passage 57 is bounded on either side by a web 54 and on a lower face by the filter 4. The passages 57 extend from the outer rim 51 downwardly towards, and open into, the cylindrical funnel 40 at openings 56 defined by the inner extremities of the webs 54.

[0035] The cylindrical funnel 40 comprises an outer tube 42 surrounding an inner discharge spout 43. The outer tube 42 forms the exterior of the cylindrical funnel 40. The discharge spout 43 is joined to the outer tube 42 at an upper end of the discharge spout 43 by means of an annular flange 47. The discharge spout 43 comprises an inlet 45 at an upper end which communicates with the openings 56 of the passages 57 and an outlet 44 at a lower end through which the prepared beverage is discharged into a cup or other receptacle. The discharge spout 43 comprises a frusto-conical portion 48 at an upper end and a cylindrical portion 58 at a lower end. The cylindrical portion 58 may have a slight taper such that it narrows towards the outlet 44. The frusto-conical portion 48 helps to channel beverage from the passages 57 down towards the outlet 44 without inducing turbulence to the beverage. An upper surface of the frusto-conical portion 48 is provided with four support webs 49 equi-spaced around the circumference of the cylindrical funnel 40. The support webs 49 define channels 50 therebetween. The upper edges of the support webs 49 are level with one another and perpendicular to the major axis X.

[0036] The inner member 3 may be formed as a single integral piece from polypropylene or a similar material as described above and by injection moulding in the same manner as the outer member 2.

[0037] Alternatively, the inner member 3 and/or the outer member 2 may be made from a biodegradable polymer. Examples of suitable materials include degradable polyethylene (for example, SPITEK supplied by Symphony Environmental, Borehamwood, United Kingdom), biodegradable polyester amide (for example, BAK 1095 supplied by Symphony Environmental), poly lactic acids (PLA supplied by Cargil, Minnesota, USA), starch-based polymers, cellulose derivatives and polypeptides.

[0038] The laminate 5 is formed from two layers, a first layer of aluminium and a second layer of cast polypropylene. The aluminium layer is between 0.02 and 0.07 mm in thickness. The cast polypropylene layer is between 0.025 and 0.065 mm in thickness. In one embodiment the aluminium layer is 0.06 mm and the polypropylene layer is 0.025 mm thick. This laminate is particularly advantageous as it has a high resistance to curling during assembly. As a result the laminate 5 may be pre-cut to the correct size and shape and subsequently transferred to the assembly station on the production line without undergoing distortion. Consequently, the laminate 5 is particularly well suited to welding. Other laminate materials may be used including PET/Aluminium/PP, PE/EVOH/PP, PET/metallised/PP and Aluminium/PP laminates. Roll laminate stock may be used instead of die cut stock.

[0039] The cartridge 1 may be closed by a rigid or semi-rigid lid instead of a flexible laminate.

[0040] Assembly of the cartridge 1 involves the following steps:

a) the inner member 3 is inserted into the outer member 2;
b) the filter 4 is cut to shape and placed onto the inner member 3 so to be received over the cylindrical funnel 40 and come to rest against the annular frame 41;
c) the inner member 3, outer member 2 and filter 4 are joined by ultrasonic welding;
d) the cartridge 1 is filled with one or more beverage ingredients;

e) the laminate 5 is affixed to the outer member 2.

[0041] These steps will be discussed in greater detail below.

[0042] The outer member 2 is orientated with the open bottom 12 directed upwards. The inner member 3 is then inserted into the outer member 2 with the outer rim 51 being received as a loose fit in an axial extension 14 at top 11 of the cartridge 1. The cylindrical extension 18 of the outer member 2 is at the same time received in the upper portion of the cylindrical funnel 40 of the inner member 3. The third portion 21 of the cylindrical extension 18 is seated inside the cylindrical funnel 40 with the closed lower face 31 of the cylindrical extension 18 bearing against the support webs 49 of the inner member 3. The filter 4 is then placed over the inner member 3 such that the filter material contacts the annular rim 51. An ultrasonic welding process is then used to join the filter 4 to the inner member 3 and at the same time, and in the same process step, the inner member 3 to the outer member 2. The inner member 3 and filter 4 are welded around the outer rim 51. The inner member 3 and outer member 2 are joined by means of weld lines around the outer rim 51 and also the upper edges of the webs 54.

[0043] As shown most clearly in Figure 11, the outer member 2 and inner member 3 when joined together define a void space 130 in the interior 120 below the annular flange 41 and exterior the cylindrical funnel 40 which forms a filtration chamber. The filtration chamber 130 and passages 57 above the annular frame 41 are separated by the filter paper 4.

[0044] The filtration chamber 130 contains the one or more beverage ingredients 200. The one or more beverage ingredients are packed into the filtration chamber 130. For a filtered style beverage the ingredient is typically roast and ground coffee or leaf tea. The density of packing of the beverage ingredients in the filtration chamber 130 can be varied as desired. Typically, for a filtered coffee product the filtration chamber contains between 5.0 and 10.2 grams of roast and ground coffee in a filtration bed of thickness of typically 5 to 14 mm. Optionally, the interior 120 may contain one or more bodies, such as spheres, which are freely movable within the interior 120 to aid mixing by inducing turbulence and breaking down deposits of beverage ingredients during discharge of the beverage.

[0045] The laminate 5 is then affixed to the outer member 2 by forming a weld 126 around the periphery of the laminate 5 to join the laminate 5 to the lower surface of the outwardly extending flange 35. The weld 126 is extended to seal the laminate 5 against the lower edge of the cylindrical wall 27 of the inlet chamber 26. Further, a weld 125 is formed between the laminate 5 and the lower edge of the outer tube 42 of the cylindrical funnel 40. The laminate 5 forms the lower wall of the filtration chamber 130 and also seals the inlet chamber 26 and cylindrical funnel 40. However, a small gap 123 exists prior to dispensation between the laminate 5 and the lower edge of the discharge spout 43. A variety of welding methods may be used, such as heat and ultrasonic welding, depending on the material characteristics of the laminate 5.

[0046] Advantageously, the inner member 3 spans between the outer member 2 and the laminate 5. The inner member 3 is formed from a material of relative rigidity, such as polypropylene. As such, the inner member 3 forms a load-bearing member that acts to keep the laminate 5 and outer member 2 spaced apart when the cartridge 1 is compressed. It is preferred that the cartridge 1 is subjected to a compressive load of between 130 and 280N in use. The compressive force acts to prevent the cartridge failing under internal pressurisation and also serves to squeeze the inner member 3 and outer member 2 together. This ensures that the internal dimensions of passageways and apertures in the cartridge 1 are fixed and unable to change during pressurisation of the cartridge 1.

[0047] To use the cartridge 1 it is first inserted into a beverage preparation machine and the inlet 121 and outlet 122 are opened by piercing members of the beverage preparation machine which perforate and fold back the laminate 5. An aqueous medium, typically water, under pressure enters the cartridge 1 through the inlet 121 into the inlet chamber 26 at a pressure of between 0.1-2.0 bar (10-200 KPa). From there the water is directed to flow through the slots 30 and round the manifold 16 and into the filtration chamber 130 of the cartridge 1 through the plurality of slots 17. The water is forced radially inwardly through the filtration chamber 130 and mixes with the beverage ingredients 200 contained therein. The water is at the same time forced upwardly through the beverage ingredients. The beverage formed by passage of the water through the beverage ingredients passes through the filter 4 and filtration apertures 55 into the passages 57 lying above the annular frame 41. The sealing of the filter 4 onto the spokes 53 and the welding of the rim 51 with the outer member 2 ensures that there are no short-circuits and all the beverage has to pass through the filter 4.

[0048] The beverage then flows downwardly along the radial passages 57 formed between the webs 54 and through the openings 56 and into the cylindrical funnel 40. The beverage passes along the channels 50 between the support webs 47 and down the discharge spout 43 to the outlet 44 where the beverage is discharged into a receptacle such as a cup.

[0049] Preferably, the beverage preparation machine comprises an air purge facility, wherein compressed air is forced through the cartridge 1 at the end of the operating cycle to flush out the remaining beverage into the receptacle.

[0050] A second version of cartridge 1 is shown in Figures 12 to 18. The second version of the cartridge 1 is particularly designed for use in dispensing espresso-style products such as roast and ground coffee where it is desirable to produce a beverage having a froth of tiny bubbles known as a crema. Many of the features of the second version of the cartridge 1 are the same as in the first version and like numerals have been used to reference like features. In the following description the differences between the first and second versions will be discussed. Common features which function

in the same manner will not be discussed in detail.

[0051] The outer member 2 is of the same construction as in the first version of cartridge 1 and as shown in Figures 1 to 6.

[0052] The annular frame 41 of the inner member 3 is the same as in the first version. Also, a filter 4 is disposed on the annular frame 41 so as to cover the filtration apertures 55. The outer tube 42 of the cylindrical funnel 40 is also as before. However, there are a number of differences in the construction of the inner member 2 of the second version compared to the first version. As shown in Figure 16, the discharge spout 43 is provided with a partition 65 which extends part way up the discharge spout 43 from the outlet 44. The partition 65 helps to prevent the beverage spraying and/or splashing as it exits the discharge spout 43. The profile of the discharge spout 43 is also different and comprises a stepped profile with a distinct dog-leg 66 near an upper end of the tube 43.

[0053] A rim 67 is provided upstanding from the annular flange 47 joining the outer tube 42 to the discharge spout 43. The rim 67 surrounds the inlet 45 to the discharge spout 43 and defines an annular channel 69 between the rim 67 and the upper portion of the outer tube 42. The rim 67 is provided with an inwardly directed shoulder 68. At one point around the circumference of the rim 67 an aperture 70 is provided in the form of a slot which extends from an upper edge of rim 67 to a point marginally below the level of the shoulder 68 as most clearly shown in Figures 12 and 13. The slot has a width of 0.64 mm.

[0054] An air inlet 71 is provided in annular flange 47 circumferentially aligned with the aperture 70 as shown in Figures 16 and 17. The air inlet 71 comprises an aperture passing through the flange 47 so as to provide communication between a point above the flange 47 and the void space below the flange 47 between the outer tube 42 and discharge spout 43. Preferably, and as shown, the air inlet 71 comprises an upper frusto-conical portion 73 and a lower cylindrical portion 72. The air inlet 71 is typically formed by a mould tool such as a pin. The tapered profile of the air inlet 71 allows the mould tool to be more easily removed from the moulded component. The wall of the outer tube 42 in the vicinity of the air inlet 71 is shaped to form a chute 75 leading from the air inlet 71 to the inlet 45 of the discharge spout 43. As shown in Figure 17, a canted shoulder 74 is formed between the air inlet 71 and the chute 75 to ensure that the jet of beverage issuing from the slot 70 does not immediately foul on the upper surface of the flange 47 in the immediate vicinity of the air inlet 71.

[0055] The assembly procedure for the second version of cartridge 1 is similar to the assembly of the first version. However, there are certain differences. As shown in Figure 18, the third portion 21 of the cylindrical extension 18 is seated inside the support rim 67 rather than against support webs. The shoulder 32 of the cylindrical extension 18 between the second portion 20 and third portion 21 bears against the upper edge of the support rim 67 of the inner member 3. An interface zone 124 is thus formed between the inner member 3 and the outer member 2 comprising a face seal between the cylindrical extension 18 and the support rim 67 which extends around nearly the whole circumference of the cartridge 1. The seal between the cylindrical extension 18 and the support rim 67 is not fluid-tight though since the slot 70 in the support rim 67 extends through the support rim 67 and downwardly to a point marginally below the shoulder 68. Consequently the interface fit between the cylindrical extension 18 and the support rim 67 transforms the slot 70 into an aperture 128, as most clearly shown in Figure 18, providing gas and liquid communication between the annular channel 69 and the discharge spout 43. The aperture is typically 0.64 mm wide by 0.69 mm long.

[0056] Operation of the second version of cartridge 1 to dispense a beverage is similar to the operation of the first version but with certain differences. Beverage in the radial passages 57 flows downwardly along the passages 57 formed between the webs 54 and through the openings 56 and into the annular channel 69 of the cylindrical funnel 40. From the annular channel 69 the beverage is forced under pressure through the aperture 128 by the back pressure of beverage collecting in the filtration chamber 130 and passages 57. The beverage is thus forced through aperture 128 as a jet and into an expansion chamber formed by the upper end of the discharge spout 43. As shown in Figure 18, the jet of beverage passes directly over the air inlet 71. As the beverage enters the discharge spout 43 the pressure of the beverage jet drops. As a result air is entrained into the beverage stream in the form of a multitude of small air bubbles as the air is drawn up through the air inlet 71. The jet of beverage issuing from the aperture 128 is funnelled downwards to the outlet 44 where the beverage is discharged into a receptacle such as a cup where the air bubbles form the desired crema. Thus, the aperture 128 and the air inlet 71 together form an eductor which acts to entrain air into the beverage. Flow of beverage into the eductor should be kept as smooth as possible to reduce pressure losses. Advantageously, the walls of the eductor should be made concave to reduce losses due to 'wall effect' friction. The dimensional tolerance of the aperture 128 is small. Preferably the aperture size is fixed plus or minus 0.02 mm^2. Hairs, fibrils or other surface irregularities can be provided within or at the exit of the eductor to increase the effective cross-sectional area which has been found to increase the degree of air entrainment.

[0057] A third version of cartridge 1 is shown in Figures 19 to 29. The third version of the cartridge 1 is particularly designed for use in dispensing soluble products which may be in powdered, liquid, syrup, gel or similar form. The soluble product is dissolved by or forms a suspension in, an aqueous medium such as water when the aqueous medium is passed, in use, through the cartridge 1. Examples of beverages include chocolate, coffee, milk, tea, soup or other rehydratable or aqueous-soluble products. Many of the features of the third version of the cartridge 1 are the same as in the previous versions and like numerals have been used to reference like features. In the following description the

differences between the third and previous versions will be discussed. Common features which function in the same manner will not be discussed in detail.

[0058] Compared to the outer member 2 of the previous versions, the hollow inwardly directed cylindrical extension 18 of the outer member 2 of the third version has a larger overall diameter as shown in Figure 20. In particular the diameter of the first portion 19 is typically between 16 and 18 mm compared to 13.2 mm for the outer member 2 of the previous versions. In addition, the first portion 19 is provided with a convex outer surface 19a, or bulge, as most clearly shown in Figure 20, the function of which will be described below. The diameter of the third portions 21 of the cartridges 1 are however the same resulting in the area of the shoulder 32 being greater in this, the third version of the cartridge 1. Typically the volume of the cartridge 1 when assembled is 32.5 ml ±20%.

[0059] The number and positioning of the slots in the lower end of the annular wall 13 is also different. Between 3 and 5 slots are provided. In the embodiment as shown in Figure 23, four slots 36 are provided equi-spaced around the circumference of the manifold 16. The slots 36 are slightly wider than in the previous versions of the cartridge 1 being between 0.35 and 0.45 mm, preferably 0.4 mm wide.

[0060] In other respects the outer members 2 of the cartridges 1 are the same.

[0061] The construction of the cylindrical funnel 40 of the inner member 3 is the same as in the first version of cartridge 1 with an outer tube 42, discharge spout 45, annular flange 47 and support webs 49 being provided. The only difference is that the discharge spout 45 is shaped with an upper frusto-conical section 92 and a lower cylindrical section 93.

[0062] In contrast to the previous versions and as shown in Figures 24 to 28, the annular frame 41 is replaced by a skirt portion 80 which surrounds the cylindrical funnel 40 and is joined thereto by means of eight radial struts 87 which adjoin the cylindrical funnel 40 at or near the annular flange 47. A cylindrical extension 81 of the skirt portion 80 extends upwardly from the struts 87 to define a chamber 90 with an open upper face. An upper rim 91 of the cylindrical extension 81 has an in-turned profile as shown in Figure 26. An annular wall 82 of the skirt portion 80 extends downwardly from the struts 87 to define an annular channel 86 between the skirt portion 80 and the outer tube 42.

[0063] The annular wall 82 comprises at a lower end an exterior flange 83 which lies perpendicular to the major axis X. A rim 84 depends downwardly from a lower surface of the flange 83 and contains five apertures 85 which are circumferentially equi-spaced around the rim 84. Thus, the rim 84 is provided with a castellated lower profile.

[0064] Apertures 89 are provided between the struts 87 allowing communication between the chamber 90 and the annular channel 86.

[0065] The assembly procedure for the third version of cartridge 1 is similar to the assembly of the first version but with certain differences. The outer member 2 and inner member 3 are push-fitted together as shown in Figure 29 and retained by means of a snap-fit arrangement rather than welded together. On joining the two members the inwardly directed cylindrical extension 18 is received inside the upper cylindrical extension 81 of the skirt portion 80. The inner member 3 is retained in the outer member 2 by frictional interengagement of the convex outer surface 19a of the first portion 19 of the cylindrical extension 18 with the in-turned rim 91 of the upper cylindrical extension 81. With the inner member 3 located in the outer member 2 a mixing chamber 134 is defined located exterior to the skirt portion 80. The mixing chamber 134 contains the beverage ingredients 200 prior to dispensation. It should be noted that the four inlets 36 and the five apertures 85 are staggered circumferentially with respect to one another. The radial location of the two parts relative to each other need not be determined or fixed during assembly since the use of four inlets 36 and five apertures 85 ensures that misalignment occurs between the inlets and apertures whatever the relative rotational positioning of the components.

[0066] The one or more beverage ingredients are packed into the mixing chamber 134 of the cartridge. The density of packing of the beverage ingredients in the mixing chamber 134 can be varied as desired.

[0067] The laminate 5 is then affixed to the outer member 2 and inner member 3 in the same manner as described above in the previous versions.

[0068] In use, water enters the mixing chamber 134 through the four slots 36 in the same manner as previous versions of the cartridge. The water is forced radially inwardly through the mixing chamber and mixes with the beverage ingredients contained therein. The product is dissolved or mixed in the water and forms the beverage in the mixing chamber 134 and is then driven though the apertures 85 into the annular channel 86 by back pressure of beverage and water in the mixing chamber 134. The circumferential staggering of the four inlet slots 36 and the five apertures 85 ensures that jets of water are not able to pass radially directly from the inlet slots 36 to the apertures 85 without first circulating within the mixing chamber 134. In this way the degree and consistency of dissolution or mixing of the product is significantly increased. The beverage is forced upwardly in the annular channel 86, through the apertures 89 between the struts 87 and into the chamber 90. The beverage passes from chamber 90 through the inlets 45 between the support webs 49 into the discharge spout 43 and towards the outlet 44 where the beverage is discharged into a receptacle such as a cup. The cartridge finds particular application with beverage ingredients in the form of viscous liquids or gels. In one application a liquid chocolate ingredient is contained in the cartridge 1 with a viscosity of between 1700 and 3900mPa at ambient temperature and between 5000 and 10000mPa at 0°C and a refractive solids of 67 Brix ±3. In another application liquid coffee is contained in the cartridge 1 with a viscosity of between 70 and 2000mPa at ambient and

between 80 and 5000mPa at 0°C where the coffee has a total solids level of between 40 and 70%. The liquid coffee ingredient may contain between 0.1 and 2.0% by weight sodium bicarbonate, preferably between 0.5 and 1.0% by weight. The sodium bicarbonate acts to maintain the pH level of the coffee at or below 4.8 enabling a shelf-life for coffee-filled cartridges of up to 12 months.

[0069] A fourth version of cartridge 1 is shown in Figures 30 to 34. The fourth version of the cartridge 1 is particularly designed for use in dispensing liquid products such as concentrated liquid milk. Many of the features of the fourth version of the cartridge 1 are the same as in the previous versions and like numerals have been used to reference like features. In the following description the differences between the fourth and previous versions will be discussed. Common features which function in the same manner will not be discussed in detail.

[0070] The outer member 2 is the same as in the third version of cartridge 1 and as shown in Figures 19 to 23.

[0071] The cylindrical funnel 40 of the inner member 3 is similar to that shown in the second version of cartridge 1 but with certain differences. As shown in Figure 30 the discharge spout 43 is shaped with an upper frusto-conical section 106 and a lower cylindrical section 107. Three axial ribs 105 are provided on the inner surface of the discharge spout 43 to direct the dispensed beverage downwards towards the outlet 44 and prevent the discharged beverage from spinning within the spout. Consequently, the ribs 105 act as baffles. As in the second version of cartridge 1, an air inlet 71 is provided through the annular flange 47. However, the chute 75 beneath the air inlet 71 is more elongated than in the second version.

[0072] A skirt portion 80 is provided similar to that shown in the third version of the cartridge 1 described above. Between 5 and 12 apertures 85 are provided in the rim 84. Typically ten apertures are provided rather than the five provided in the third version of cartridge 1.

[0073] An annular bowl 100 is provided extending from and integral with the flange 83 of the skirt portion 80. The annular bowl 100 comprises a flared body 101 with an open upper mouth 104 which is directed upwards. Four feed apertures 103 shown in Figures 30 and 31 are located in the body 101 at or near the lower end of the bowl 100 where it joins the skirt portion 80. Preferably, the feed apertures are equi-spaced around the circumference of the bowl 100.

[0074] The laminate 5 is of the type described above in the previous embodiments.

[0075] The assembly procedure for the fourth version of cartridge 1 is the same as that for the third version.

[0076] Operation of the fourth version of cartridge is similar to that of the third version. The water enters the cartridge 1 and the mixing chamber 134 in the same manner as before. There the water mixes with and dilutes the liquid product which is then forced out below the bowl 100 and through the apertures 85 towards the outlet 44 as described above. The proportion of the liquid product initially contained within the annular bowl 100 as shown in Figure 34 is not subject to immediate dilution by the water entering the mixing chamber 134. Rather, the diluted liquid product in the lower part of the mixing chamber 134 will tend to exit through apertures 85 rather than be forced up and into the annular bowl 100 through upper mouth 104. Consequently, the liquid product in the annular bowl 100 will remain relatively concentrated during the initial stages of the operating cycle compared to the product in the lower part of the mixing chamber 134. The liquid product in the annular bowl 100 drips through the feed apertures 103 under gravity into the stream of product exiting the mixing chamber 134 through the apertures 85 and below the bowl 100. The annular bowl 100 acts to even out the concentration of the diluted liquid product entering the cylindrical funnel 40 by holding back a proportion of the concentrated liquid product and releasing it into the exiting liquid stream flow path steadily throughout the operating cycle as illustrated in Figure 35a where the concentration of the milk measured as a percentage of the total solids present is shown during an operating cycle of approximately 15 seconds. Line a illustrates the concentration profile with the bowl 100 whilst line b illustrates a cartridge without the bowl 100. As can be seen the concentration profile with the cup 100 is more even during the operating cycle and there is no immediate large drop in concentration as occurs without the bowl 100. The initial concentration of the milk is typically 30-35% SS and at the end of the cycle 10% SS. This results in a dilution ratio of around 3 to 1, although dilution ratios of between 1 to 1 and 6 to 1 are possible with the present invention. For other liquid beverage ingredients the concentrations may vary. For example for liquid chocolate the initial concentration is approximately 67% SS and at the end of the cycle 12-15% SS. This results in a dilution ratio (ratio of aqueous medium to beverage ingredient in dispensed beverage) of around 5 to 1, although dilution ratios of between 2 to 1 and 10 to 1 are possible with the present invention. For liquid coffee the initial concentration is between 40-67% and the concentration at the end of dispense 1-2% SS. This results in a dilution ratio of between 20 to 1 and 70 to 1, although dilution ratios of between 10 to 1 and 100 to 1 are possible with the present invention.

[0077] From the annular channel 86 the beverage is forced under pressure through the aperture 128 by the back pressure of beverage collecting in the filtration chamber 134 and chamber 90. The beverage is thus forced through aperture 128 as a jet and into an expansion chamber formed by the upper end of the discharge spout 43. As shown in Figure 34, the jet of beverage passes directly over the air inlet 71. As the beverage enters the discharge spout 43 the pressure of the beverage jet drops. As a result air is entrained into the beverage stream in the form of a multitude of small air bubbles as the air is drawn up through the air inlet 71. The jet of beverage issuing from the aperture 128 is funnelled downwards to the outlet 44 where the beverage is discharged into a receptacle such as a cup where the air bubbles form the desired frothy appearance.

[0078] Advantageously, the inner member 3, outer member 2, laminate 5 and filter 4 can all be readily sterilised due to the components being separable and not individually comprising tortuous passageways or narrow crevices. Rather, it is only after conjoining the components, after sterilisation, that the necessary passageways are formed. This is particularly important where the beverage ingredient is a dairy-based product such as liquid milk concentrate.

[0079] The fourth embodiment of beverage cartridge is particularly advantageous for dispensing a concentrated dairy-based liquid product such as liquid milk. Previously, powdered milk products have been provided in the form of sachets for adding to a pre-prepared beverage. However, for a cappuccino-style beverage it is necessary to foam the milk. This has been achieved previously by passing steam through a liquid milk product. However this necessitates the provision of a steam supply which increases the cost and complexity of the machine used to dispense the beverage. The use of steam also increases the risk of injury during operation of the cartridge. Accordingly the present invention provides for a beverage cartridge having a concentrated dairy-based liquid product therein. It has been found that by concentrating the milk product a greater amount of foam can be produced for a particular volume of milk when compared to fresh or UHT milk. This reduces the size required for the milk cartridge. Fresh semi-skimmed milk contains approximately 1.6% fat and 10% total solids. The concentrated liquid milk preparations of the present invention contain between 1.5 and 12% fat and 25 to 40% total solids. In a typical example, the preparation contains 4% fat and 30% total solids. The concentrated milk preparations are suitable for foaming using a low pressure preparation machine as will be described below. In particular, foaming of the milk is achieved at pressures below 2 bar (200 KPa), preferably approximately 1.5 bar (150 KPa) using the cartridge of the fourth embodiment described above.

[0080] The foaming of the concentrated milk is particularly advantageous for beverages such as cappuccinos and milk shakes. Preferably the passing of the milk through the aperture 128 and over the air inlet 71 and the optional use of the bowl 100 enables foaming levels of greater than 40%, preferably greater than 70% for milk. For liquid chocolate foaming levels of greater than 70% are possible. For liquid coffee foaming levels of greater than 70% are possible. The foamability level is measured as the ratio of the volume of the foam produced to the volume of liquid beverage ingredient dispensed. For example, where 138.3ml of beverage is dispensed, of which 58.3ml is foam the foamability is measured as [58.3/(138.3-58.3)]*100 = 72.9%. The foamability of the milk (and other liquid ingredients) is enhanced by the provision of the bowl 100 as can be seen in Figure 35b. The foamability of the milk dispensed with the bowl 100 present (line a) is greater than that of milk dispensed without the bowl present (line b). This is because the foamability of the milk is positively correlated to the concentration of the milk and as shown in Figure 35a the bowl 100 maintains a higher concentration of the milk a larger part of the operating cycle. It is also known that foamability of the milk is positively correlated to temperature of the aqueous medium as shown in Figure 35c. Thus the bowl 100 is advantageous since more of the milk remains in the cartridge until near the end of the operating cycle when the aqueous medium is at its hottest. This again improves foamability.

[0081] The cartridge of the fourth embodiment is also advantageous in dispensing liquid coffee products.

[0082] It has been found that the embodiments of beverage cartridge of the present invention advantageously provide an improved consistency of the brewed beverage when compared to prior art cartridges. Reference is made to Table 1 below which shows the results of brew yields for twenty samples each of cartridges A and B containing roast and ground coffee. Cartridge A is a beverage cartridge according to the first embodiment of the present invention. Cartridge B is a prior art beverage cartridge as described in the applicant's document WO01/58786. The refractive index of the brewed beverage is measured in Brix units and converted to a percentage of soluble solids (%SS) using standard tables and formulae. In the examples below:

$$\%SS = 0.7774 * (\text{Brix value}) + 0.0569.$$

$$\%\ \text{Yield} = (\%SS * \text{Brew Volume (g)})/(100 * \text{Coffee Weight (g)})$$

Table 1

CARTRIDGE A					
Sample	Brew Volume (g)	Coffee Weight (g)	Brix	% SS (*)	% Yield
1	105.6	6.5	1.58	1.29	20.88

(continued)

CARTRIDGE A					
Sample	Brew Volume (g)	Coffee Weight (g)	Brix	% SS (*)	% Yield
2	104.24	6.5	1.64	1.33	21.36
3	100.95	6.5	1.67	1.36	21.05
4	102.23	6.5	1.71	1.39	21.80
5	100.49	6.5	1.73	1.40	21.67
6	107.54	6.5	1.59	1.29	21.39
7	102.70	6.5	1.67	1.36	21.41
8	97.77	6.5	1.86	1.50	22.61
9	97.82	6.5	1.7	1.38	20.75
10	97.83	6.5	1.67	1.36	20.40
11	97.6	6.5	1.78	1.44	21.63
12	106.64	6.5	1.61	1.31	21.47
13	99.26	6.5	1.54	1.25	19.15
14	97.29	6.5	1.59	1.29	19.35
15	101.54	6.5	1.51	1.23	19.23
16	104.23	6.5	1.61	1.31	20.98
17	97.5	6.5	1.73	1.40	21.03
18	100.83	6.5	1.68	1.36	21.14
19	101.67	6.5	1.67	1.36	21.20
20	101.32	6.5	1.68	1.36	21.24
				AVERAGE	20.99
CARTRIDGE B					
Sample	Brew Volume (g)	Coffee Weight (g)	Brix	% SS (*)	% Yield
1	100.65	6.5	1.87	1.511	23.39
2	95.85	6.5	1.86	1.503	22.16
3	98.4	6.5	1.8	1.456	22.04
4	92.43	6.5	2.3	1.845	26.23
5	100.26	6.5	1.72	1.394	21.50
6	98.05	6.5	2.05	1.651	24.90
7	99.49	6.5	1.96	1.581	24.19
8	95.62	6.5	2.3	1.845	27.14
9	94.28	6.5	2.17	1.744	25.29
10	96.13	6.5	1.72	1.394	20.62
11	96.86	6.5	1.81	1.464	21.82
12	94.03	6.5	2.2	1.767	25.56
13	96.28	6.5	1.78	1.441	21.34
14	95.85	6.5	1.95	1.573	23.19

(continued)

CARTRIDGE B					
Sample	Brew Volume (g)	Coffee Weight (g)	Brix	% SS (*)	% Yield
15	95.36	6.5	1.88	1.518	22.28
16	92.73	6.5	1.89	1.526	21.77
17	88	6.5	1.59	1.293	17.50
18	93.5	6.5	2.08	1.674	24.08
19	100.88	6.5	1.75	1.417	22.00
20	84.77	6.5	2.37	1.899	24.77
				AVERAGE	23.09

[0083] Performing a t-test statistical analysis on the above data gives the following results:

Table 2

t-Test: Two-Sample Assuming Equal Variances		
	% Yield (Cartridge A)	*% Yield (Cartridge B)*
Mean	20.99	23.09
Variance	0.77	5.04
Observations	20	20
Pooled Variance	2.90	
Hypothesized Mean Difference	0	
df	38	
t Stat	-3.90	
P(T<=t) one-tail	0.000188	
t Critical one-tail	1.686	
P(T<=t) two-tail	0.000376	
t Critical two-tail	2.0244	
Standard Deviation	0.876	2.245

[0084] The analysis shows that the consistency of % yield, which equates to brew strength, for the cartridges of the present invention is significantly better (at a 95% confidence level) than the prior art cartridges, with a standard deviation of 0.88% compared to 2.24%. This means that beverages brewed with the cartridges of the present invention have a more repeatable and uniform strength. This is preferred by consumers who like their drinks to taste the same time after time and do not want arbitrary changes in brew strength.

[0085] The materials of the cartridges described above may be provided with a barrier coating to improve their resistance to oxygen and/or moisture and/or other contaminant ingress. The barrier coating may also improve the resistance to leakage of the beverage ingredients from within the cartridges and/or reduce the degree of leaching of extractibles from the cartridge materials which might adversely affect the beverage ingredients. The barrier coating may be of a material selected from the group of PET, Polyamide, EVOH, PVDC or a metallised material. The barrier coating may be applied by a number of mechanisms including but not limited to vapour deposition, vacuum deposition, plasma coating, co-extrusion, in-mould labelling and two/multi-stage moulding.

Claims

1. A method of manufacturing a cartridge (1) for dispensation of a beverage comprising the steps of:

a. manufacturing a plurality of outer members (2) comprising at least a first type of outer member and a second type of outer member having differing shape or configurations;
b. manufacturing a plurality of inner members (3) comprising at least a first type of inner member and a second

type of inner member having differing shape or configurations;
c. storing said plurality of outer members and said inner members;
d. selecting one of the first type of outer member or the second type of outer member from the plurality of outer members;
e. selecting one of the first type of inner member or the second type of inner member from the plurality of inner members;
f. conjoining the selected inner member to the selected outer member such that the inner member is within the outer member;
g. filling the outer member with one or more beverage ingredients (200) selected from a plurality of beverage ingredients; and
h. sealing the outer member with a lid (5) to form the cartridge, **characterised in that** the first and second types of inner member are interchangeable, wherein the first type of inner member (3) is suitable for filtering roast and ground beverage ingredients and the like, and wherein the second type of inner member (3) is suitable for filtering roast and ground beverage ingredients and the like and for entraining a plurality of air bubbles in the dispensed beverage.

2. A method as claimed in claim 1 further comprising in step b. of joining a filter member (4) to the first type and/or second type of inner member (3).

3. A method as claimed in claim 1 or claim 2 wherein the first type of outer member (2) is suitable for containing roast and ground beverage ingredients or the like.

4. A method as claimed in any preceding claim wherein the second type of outer member (2) is suitable for containing soluble or liquid beverage ingredients or the like.

5. A method as claimed in any preceding claim wherein the first and second type of inner member (3) comprise a frame (41) having a filter (4) disposed thereupon, and wherein a peripheral rim (51) of the frame is conjoined to the selected type of outer member by welding.

6. A method as claimed in claim 5 wherein the second type of inner member (3) comprises means (70) for producing a jet of the beverage, which means comprises an aperture in a beverage flow path between an inlet and an outlet of the cartridge.

7. A method as claimed in any preceding claim further comprising manufacturing and storing a third type of inner member (3) .

8. A method as claimed in claim 7 wherein the third type of inner member is suitable for dispensing soluble beverage ingredients and the like.

9. A method as claimed in any of claims 7 to 8 further comprising manufacturing and storing a fourth type of inner member (3).

10. A method as claimed in claim 9 wherein the fourth type of inner member (3) is suitable for dispensing a liquid beverage ingredients and the like.

11. A method as claimed in any of claims 7 to 10 wherein the third or fourth type of inner member (3) comprises a skirt (80) surrounding an outlet, the skirt comprising an upper extension (81) having an upper rim (91) which engages, on assembly of the cartridge, a co-operating formation (19) of the selected type of outer member (2) to form a snap-fit arrangement for conjoining the third or fourth type of inner member to the selected type of outer member.

12. A cartridge system comprising a plurality of cartridges for dispensing a plurality of beverages the cartridge system comprising:

a. a plurality of outer members (3) comprising at least a first type of outer member and a second type of outer member having differing shape or configurations;
b. a plurality of inner members (2) comprising at least a first type of inner member and a second type of inner member having differing shape or configurations;
c. a plurality of beverage ingredients (200); and

d. a plurality of lids (5) wherein each cartridge comprises an outer member, an inner member, one or more beverage ingredients and a lid to seal the cartridge, **characterised in that** the first and second types of inner member are interchangeable, wherein the first type of inner member (3) is suitable for filtering roast and ground beverage ingredients and the like, and wherein the second type of inner member (3) is suitable for filtering roast and ground beverage ingredients and the like and comprises means entraining a plurality of air bubbles in the dispensed beverage.

13. A cartridge system as claimed in claim 12 wherein each cartridge further comprises a filter (4).

14. A cartridge system as claimed in claim 12 or claim 13 wherein the first type of outer member (3) is suitable for containing roast and ground beverage ingredients or the like.

15. A cartridge system as claimed in any of claims 12 to 14 wherein the second type of outer member (3) is suitable for containing soluble or liquid beverage ingredients or the like.

16. A cartridge system as claimed in any of claims 12 to 15 wherein the first and second type of inner member (3) comprise a frame (41) having a filter (4) disposed thereupon, and wherein a peripheral rim (51) of the frame is conjoined to the selected type of outer member by welding.

17. A cartridge system as claimed in any of claims 12 to 16 wherein the second type of inner member (3) comprises means (70) for producing a jet of the beverage, which means comprises an aperture in a beverage flow path between an inlet and an outlet of the cartridge.

18. A cartridge system as claimed in any of claims 12 to 17 further comprising a third type of inner member (3).

19. A cartridge system as claimed in claim 18 wherein the third type of inner member (3) is suitable for dispensing soluble beverage ingredients and the like.

20. A cartridge system as claimed in any of claims 18 to 19 further comprising a fourth type of inner member (3).

21. A cartridge system as claimed in claim 20 wherein the fourth type of inner member (3) is suitable for dispensing a liquid beverage ingredients and the like.

22. A cartridge system as claimed in claim 20 or claim 21 wherein the fourth type of inner member (3) comprises means entraining a plurality of air bubbles in the dispensed beverage.

23. A cartridge system as claimed in any of claims 18 to 21 wherein the third or fourth type of inner member (3) comprises a skirt (80) surrounding an outlet, the skirt comprising an upper extension (81) having an upper rim (91) which engages, on assembly of the cartridge, a co-operating formation (19) of the selected type of outer member to form a snap-fit arrangement for conjoining the third or fourth type of inner member to the selected type of outer member.

Patentansprüche

1. Verfahren zur Herstellung einer Patrone für die Ausgabe eines Getränks, umfassend die folgenden Schritte:

a) Herstellen einer Vielzahl äußerer Elemente (2), die mindestens eine erste Art von äußerem Element und eine zweite Art von äußerem Element mit unterschiedlicher Form oder Gestaltungen umfassen;
b) Herstellen einer Vielzahl innerer Elemente (3), die mindestens eine erste Art von innerem Element und eine zweite Art von innerem Element mit unterschiedlicher Form oder Gestaltungen umfassen;
c) Unterbringen der Vielzahl äußerer Elemente und innerer Elemente;
d) Auswählen der ersten Art von äußerem Element oder der zweiten Art von äußerem Element aus der Vielzahl äußerer Elemente;
e) Auswahl der ersten Art von innerem Element oder der zweiten Art von innerem Element aus der Vielzahl von inneren Elementen;
f) Verbinden des ausgewählten inneren Elements mit dem ausgewählten äußeren Element, sodass das innere Element sich innerhalb des äußeren Elements befindet;
g) Füllen des äußeren Elements mit einer oder mehreren Getränkezutaten (200), die aus einer Vielzahl von

Getränkezutaten ausgewählt sind; und
h) Versiegeln des äußeren Elements mit einem Deckel (5), um die Patrone zu bilden, **dadurch gekennzeichnet, dass** die erste und zweite Art von innerem Element miteinander austauschbar sind, wobei die erste Art von innerem Element (3) geeignet ist, um geröstete und gemahlene Getränkzutaten und ähnliches zu filtern, und wobei die zweite Art von innerem Element (3) geeignet ist, um geröstete und gemahlene Getränkezutaten und ähnliches zu filtern und um eine Vielzahl von Luftblasen in das ausgegebene Getränk einzubringen.

2. Verfahren nach Anspruch 1, weiter im Schritt b) das Verbinden eines Filterelements (4) mit der ersten Art und/oder der zweiten Art von innerem Element 3 umfassend.

3. Verfahren nach Anspruch 1 oder Anspruch 2, wobei die erste Art von äußerem Element (2) geeignet ist, geröstete und gemahlene Getränkezutaten oder ähnliches zu enthalten.

4. Verfahren nach einem der vorangehenden Ansprüche, wobei die zweite Art von äußerem Element (2) geeignet ist, um lösliche oder flüssige Getränkezutaten oder ähnliches zu enthalten.

5. Verfahren nach einem der vorangehenden Ansprüche, wobei die erste und zweite Art von innerem Element (3) einen Rahmen (41) mit einem darauf angeordneten Filter (4) umfassen, und wobei ein äußerer Rand (51) des Rahmens mit der ausgewählten Art von äußerem Element durch Schweißen verbunden ist.

6. Verfahren nach Anspruch 5, wobei die zweite Art von innerem Element ein Mittel (70) zum Erzeugen eines Getränkestrahls umfasst, wobei das Mittel eine Öffnung in einem Getränkeflussweg zwischen einem Einlass und einem Auslass der Patrone umfasst.

7. Verfahren nach einem der vorangehenden Ansprüche, weiter das Herstellen und Unterbringen einer dritten Art von innerem Element (3) umfassend.

8. Verfahren nach Anspruch 7, wobei die dritte Art von innerem Element geeignet ist, um lösliche Getränkezutaten und ähnliches auszugeben.

9. Verfahren nach einem der Ansprüche 7 bis 8, weiter das Herstellen und Unterbringen einer vierten Art von innerem Element (3) umfassend.

10. Verfahren nach Anspruch 9, wobei die vierte Art von innerem Element (3) geeignet ist, um flüssige Getränkezutaten und ähnliches auszugeben.

11. Verfahren nach einem der Ansprüche 7 bis 10, wobei die dritte oder vierte Art von innerem Element (3) eine einen Auslass umgebende Randleiste (80) umfasst, wobei die Randleiste eine obere Verlängerung (81) mit einem oberen Rand (91) umfasst, der beim Zusammenbau der Patrone mit einer zusammenwirkenden Struktur (19) der ausgewählten Art von äußerem Element (2) eingreift, um eine Einschnappanordnung zum Verbinden der dritten oder vierten Art von innerem Element mit der ausgewählten Art von äußerem Element zu bilden.

12. Patronensystem, umfassend eine Vielzahl von Patronen zum Ausgeben einer Vielzahl von Getränken, wobei das Patronensystem umfasst:

a) eine Vielzahl von äußeren Elementen (3), die mindestens eine erste Art von äußerem Element und eine zweite Art von äußerem Element mit unterschiedlicher Form oder Gestaltungen umfassen;
b) eine Vielzahl innerer Elemente (2), die mindestens eine erste Art von innerem Element und eine zweite Art von innerem Element mit unterschiedlicher Form oder Gestaltungen umfassen;
c) eine Vielzahl von Getränkezutaten (200); und
d) eine Vielzahl von Deckeln (5) wobei jede Patrone ein äußeres Element, ein inneres Element, eine oder mehrere Getränkezutaten und einen Deckel umfasst, um die Patrone zu versiegeln, **dadurch gekennzeichnet, dass** die erste und zweite Art von innerem Element miteinander austauschbar sind, wobei die erste Art von innerem Element (3) geeignet ist, um geröstete und gemahlene Getränkezutaten und ähnliches zu filtern, und wobei die zweite Art von innerem Element (3) geeignet ist, um geröstete und gemahlene Getränkezutaten und ähnliches zu filtern, und ein Mittel umfasst, um eine Vielzahl von Luftblasen in das ausgegebene Getränk einzubringen.

13. Patronensystem nach Anspruch 12, wobei jede Patrone weiter einen Filter (4) umfasst.

14. Patronensystem nach Anspruch 12 oder Anspruch 13, wobei die erste Art von äußerem Element (3) geeignet ist, um geröstete oder gemahlene Getränkezutaten oder ähnliches zu enthalten.

15. Patronensystem nach einem der Ansprüche 12 bis 14, wobei die zweite Art von äußerem Element (3) geeignet ist, um lösliche oder flüssige Getränkezutaten oder ähnliches zu enthalten.

16. Patronensystem nach einem der Ansprüche 12 bis 15, wobei die erste und zweite Art von innerem Element (3) einen Rahmen (41) mit einem darauf angeordneten Filter (4) umfassen, und wobei ein äußerer Rand (51) des Rahmens mit der ausgewählten Art von äußerem Element durch Verschweißen verbunden ist.

17. Patronensystem nach einem der Ansprüche 12 bis 16, wobei die zweite Art von innerem Element (3) ein Mittel (70) zum Erzeugen eines Getränkestrahls umfasst, wobei das Mittel eine Öffnung in einem Getränkeflussweg zwischen einem Einlass und einem Auslass der Patrone umfasst.

18. Patronensystem nach einem der Ansprüche 12 bis 17, weiter eine dritte Art von innerem Element (3) umfassend.

19. Patronensystem nach einem Anspruch 18, wobei die dritte Art von innerem Element (3) geeignet ist, um lösliche Getränkezutaten und ähnliches auszugeben.

20. Patronensystem nach einem der Ansprüche 18 bis 19, weiter eine vierte Art von innerem Element (3) umfassend.

21. Patronensystem nach Anspruch 20, wobei die vierte Art von innerem Element (3) geeignet ist, um flüssige Getränkezutaten und ähnliches auszugeben.

22. Patronensystem nach Anspruch 20 oder 21, wobei die vierte Art von innerem Element (3) Mittel zum Einbringen einer Vielzahl von Luftblasen in das ausgegebene Getränk umfasst.

23. Patronensystem nach einem der Ansprüche 18 bis 21, wobei die dritte oder vierte Art von innerem Element (3) eine einen Auslass umgebende Randleiste (80) umfasst, wobei die Randleiste eine obere Verlängerung (81) mit einem oberen Rand (91) umfasst, der beim Zusammenbau der Patrone mit einer zusammenwirkenden Struktur (19) der ausgewählten Art von äußerem Element eingreift, um eine Einschnappanordnung zum Verbinden der dritten oder vierten Art von innerem Element mit der ausgewählten Art von äußerem Element zu bilden.

Revendications

1. Procédé de fabrication d'une cartouche (1) pour la distribution d'une boisson, comprenant les étapes qui consistent :

a. à fabriquer une pluralité d'éléments extérieurs (2) comprenant au moins un premier type d'élément extérieur et un second type d'élément extérieur ayant une forme ou des configurations différentes ;
b. à fabriquer une pluralité d'éléments intérieurs (3) comprenant au moins un premier type d'élément intérieur et un second type d'élément intérieur ayant une forme ou des configurations différentes ;
c. à emmagasiner ladite pluralité d'éléments extérieurs et lesdits éléments intérieurs ;
d. à sélectionner l'un du premier type d'élément extérieur ou du second type d'élément extérieur parmi la pluralité d'éléments extérieurs ;
e. à sélectionner l'un du premier type d'élément intérieur ou du second type d'élément intérieur parmi la pluralité d'éléments intérieurs ;
f. à réunir l'élément intérieur sélectionné à l'élément extérieur sélectionné de façon que l'élément intérieur se trouve dans l'élément extérieur ;
g. à remplir l'élément extérieur d'un ou plusieurs ingrédients (200) de boisson sélectionnés parmi une pluralité d'ingrédients de boisson ; et
h. à fermer hermétiquement l'élément extérieur avec un couvercle (5) pour former la cartouche, **caractérisé en ce que** les premier et second types d'élément intérieur sont interchangeables, dans lequel le premier type d'élément intérieur (3) convient pour la filtration d'ingrédients de boisson torréfiés et moulus et analogues, et dans lequel le second type d'élément intérieur (3) convient pour la filtration d'ingrédients de boisson torréfiés et moulus et analogues et pour l'entraînement de multiples bulles d'air dans la boisson distribuée.

2. Procédé selon la revendication 1, comprenant en outre, dans l'étape b. l'adjonction d'un élément à filtre (4) au premier type et/ou second type d'élément intérieur (3).

3. Procédé selon la revendication 1 ou la revendication 2, dans lequel le premier type d'élément extérieur (2) convient pour contenir des ingrédients de boisson torréfiés et moulus ou analogues.

4. Procédé selon l'une quelconque des revendications précédentes, dans lequel le second type d'élément extérieur (2) convient pour contenir des ingrédients de boisson solubles ou liquides ou analogues.

5. Procédé selon l'une quelconque des revendications précédentes, dans lequel les premier et second types d'élément intérieur (3) comprennent un bâti (41) sur lequel un filtre (4) est disposé, et dans lequel un rebord périphérique (51) du bâti est réuni par soudage au type sélectionné d'élément extérieur.

6. Procédé selon la revendication 5, dans lequel le second type d'élément intérieur (3) comporte un moyen (70) pour la production d'un jet de la boisson, lequel moyen présente une ouverture dans le trajet d'écoulement de boisson entre une entrée et une sortie de la cartouche.

7. Procédé selon l'une quelconque des revendications précédentes, comprenant en outre la fabrication et l'emmagasinage d'un troisième type d'élément intérieur (3).

8. Procédé selon la revendication 7, dans lequel le troisième type d'élément intérieur convient à la distribution d'ingrédients de boisson solubles et analogues.

9. Procédé selon l'une des revendications 7 et 8, comprenant en outre la fabrication et l'emmagasinage d'un quatrième type d'élément intérieur (3).

10. Procédé selon la revendication 9, dans lequel le quatrième type d'élément intérieur (3) convient à la distribution d'ingrédients de boisson liquides et analogues.

11. Procédé selon l'une quelconque des revendications 7 à 10, dans lequel le troisième ou quatrième type d'élément intérieur (3) comporte une jupe (80) entourant une sortie, la jupe comportant un prolongement supérieur (81) ayant un rebord supérieur (91) qui engage, lors de l'assemblage de la cartouche, une conformation coopérante (19) du type sélectionné d'élément extérieur (2) pour former un agencement d'assemblage par encliquetage pour réunir le troisième ou quatrième type d'élément intérieur au type sélectionné d'élément extérieur.

12. Système de cartouches comportant plusieurs cartouches pour la distribution de plusieurs boissons, le système de cartouches comportant :

a. une pluralité d'éléments extérieurs (3) comprenant au moins un premier type d'élément extérieur et un second type d'élément extérieur ayant une forme ou des configurations différentes ;
b. une pluralité d'éléments intérieurs (2) comprenant au moins un premier type d'élément intérieur et un second type d'élément intérieur ayant une forme ou des configurations différentes ;
c. une pluralité d'ingrédients (200) pour boissons ; et
d. une pluralité de couvercles (5), chaque cartouche comportant un élément extérieur, un élément intérieur, un ou plusieurs ingrédients pour boissons et un couvercle pour fermer de façon étanche la cartouche, **caractérisé en ce que** les premier et second types d'élément intérieur sont interchangeables, dans lequel le premier type d'élément intérieur (3) convient pour filtrer des ingrédients pour boisson torréfiés et moulus et analogues, et dans lequel le second type d'élément intérieur (3) convient pour la filtration d'ingrédients pour boisson torréfiés et moulus et analogues et comporte un moyen entraînant de multiples bulles d'air dans la boisson distribuée.

13. Système de cartouches selon la revendication 12, dans lequel chaque cartouche comporte en outre un filtre (4).

14. Système de cartouches selon la revendication 12 ou la revendication 13, dans lequel le premier type d'élément extérieur (3) convient pour contenir des ingrédients de boisson torréfiés et moulus ou analogues.

15. Système de cartouches selon l'une quelconque des revendications 12 à 14, dans lequel le second type d'élément extérieur (3) convient pour contenir des ingrédients de boisson solubles ou liquides ou analogues.

16. Système de cartouches selon l'une quelconque des revendications 12 à 15, dans lequel les premier et second types d'élément intérieur (3) comprennent un bâti (41) sur lequel un filtre (4) est disposé, et dans lequel un rebord périphérique (51) du bâti est réuni par soudage au type sélectionné d'élément extérieur.

17. Système de cartouches selon l'une quelconque des revendications 12 à 16, dans lequel le second type d'élément intérieur (3) comporte un moyen (70) pour la production d'un jet de la boisson, lequel moyen présente une ouverture dans un trajet d'écoulement de boisson entre une entrée et une sortie de la cartouche.

18. Système de cartouches selon l'une quelconque des revendications 12 à 17, comportant en outre un troisième type d'élément intérieur (3).

19. Système de cartouches selon la revendication 18, dans lequel le troisième type d'élément intérieur (3) convient pour la distribution d'ingrédients de boisson solubles et analogues.

20. Système de cartouches selon l'une quelconque des revendications 18 et 19, comportant en outre un quatrième type d'élément intérieur (3).

21. Système de cartouches selon la revendication 20, dans lequel le quatrième type d'élément intérieur (3) convient pour la distribution d'ingrédients de boisson liquides et analogues.

22. Système de cartouches selon la revendication 20 ou la revendication 21, dans lequel le quatrième type d'élément intérieur (3) comporte un moyen entraînant de multiples bulles d'air dans la boisson distribuée.

23. Système de cartouches selon l'une quelconque des revendications 18 à 21, dans lequel le troisième ou quatrième type d'élément intérieur (3) comporte une jupe (80) entourant une sortie, la jupe comportant un prolongement supérieur (81) ayant un rebord supérieur (91) qui engage, lors de l'assemblage de la cartouche, une conformation coopérante (19) du type sélectionné d'élément extérieur pour former un agencement d'assemblage par encliquetage pour réunir le troisième ou quatrième type d'élément intérieur au type sélectionné d'élément extérieur.

FIG. 1.

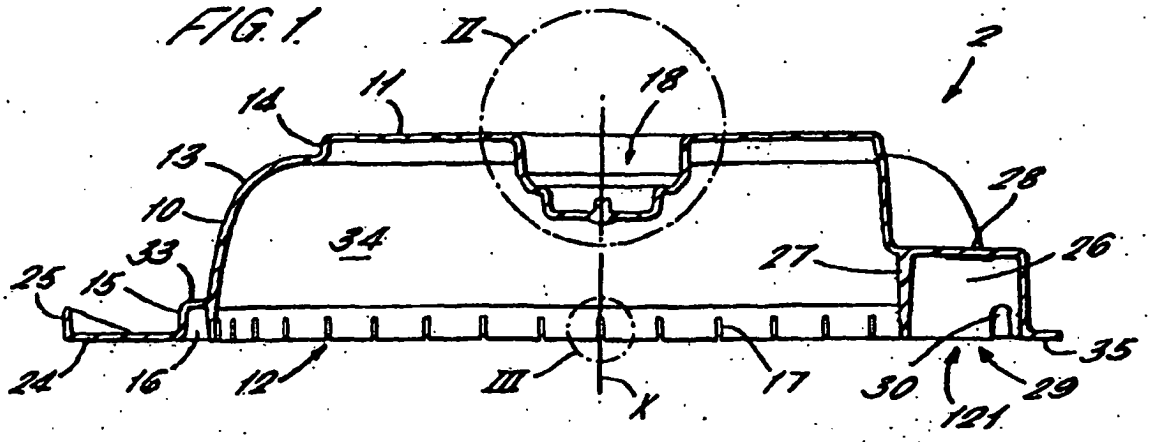

FIG. 2.

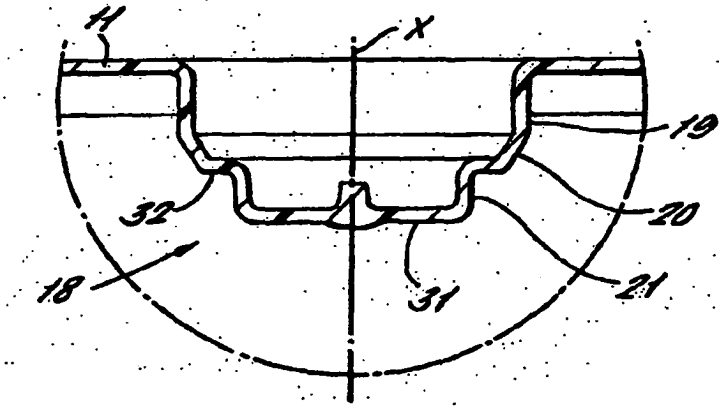

FIG. 3.

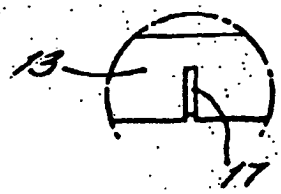

FIG. 4.

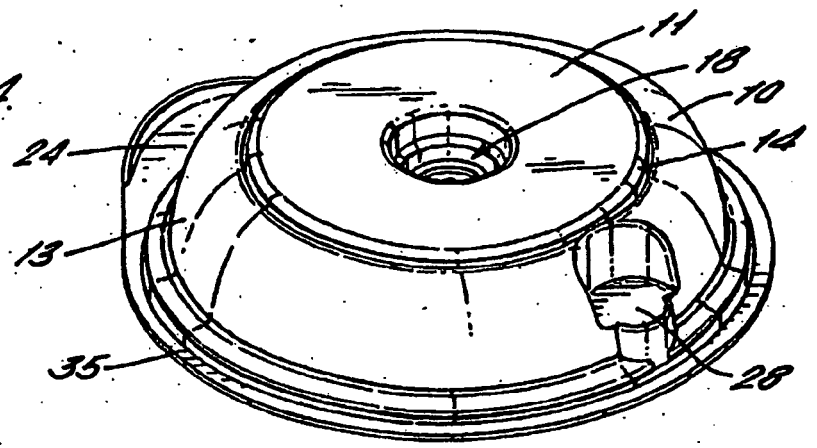

FIG. 5.

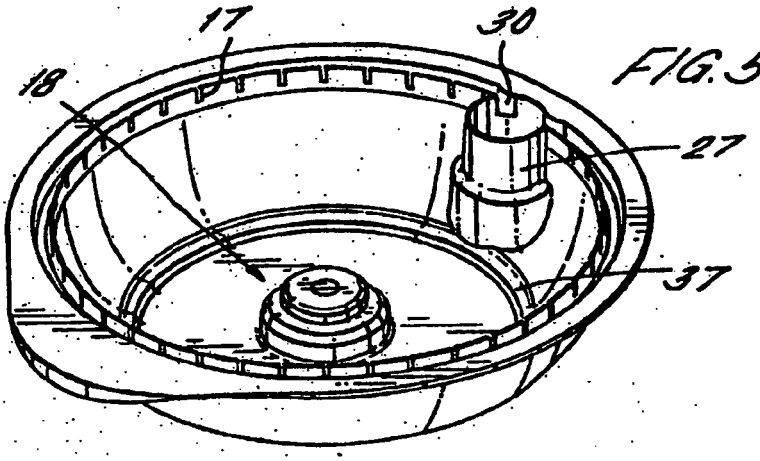

FIG. 6.

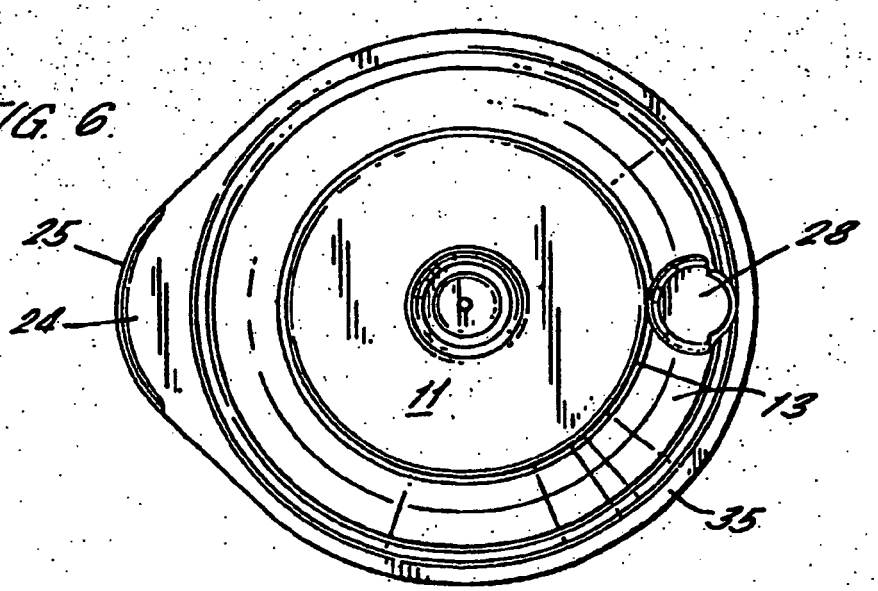

FIG. 7.

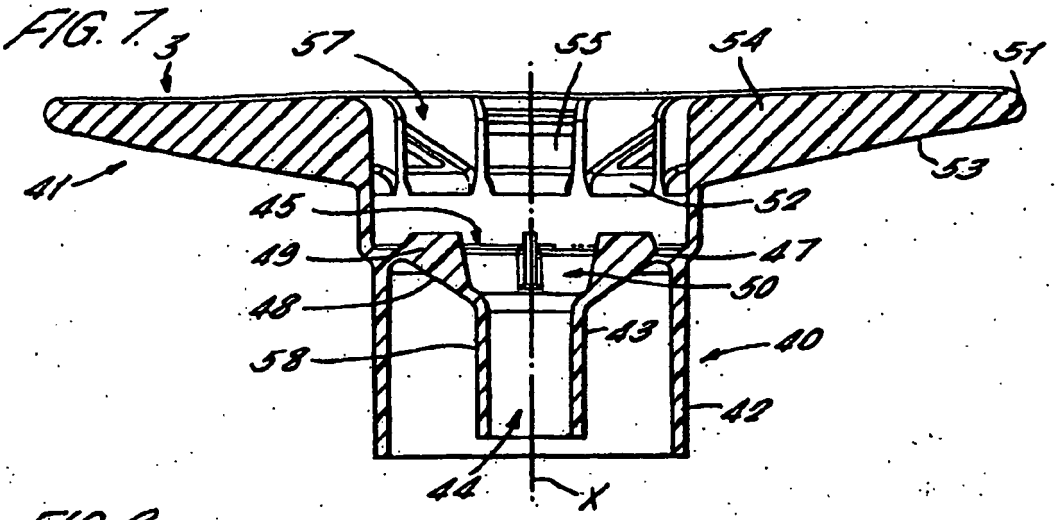

FIG. 8.

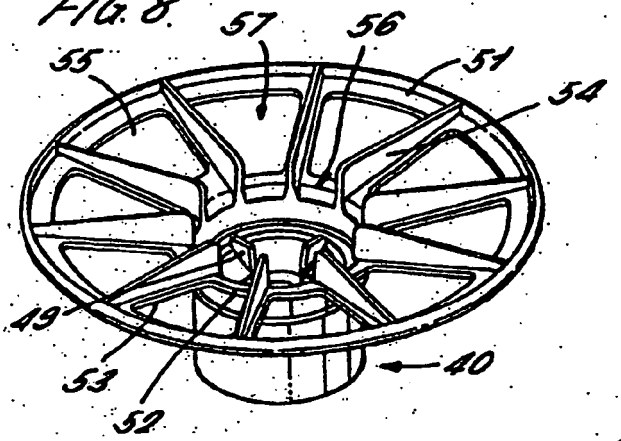

FIG. 9.

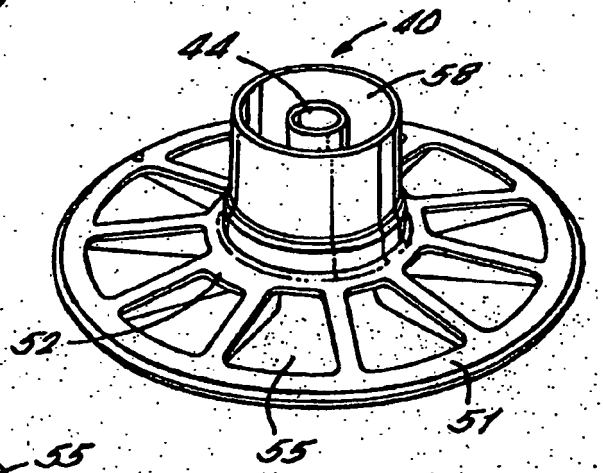

FIG. 10.

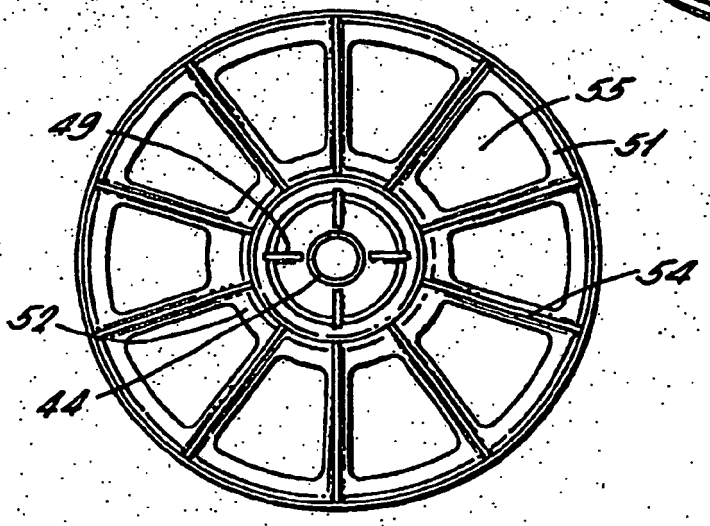

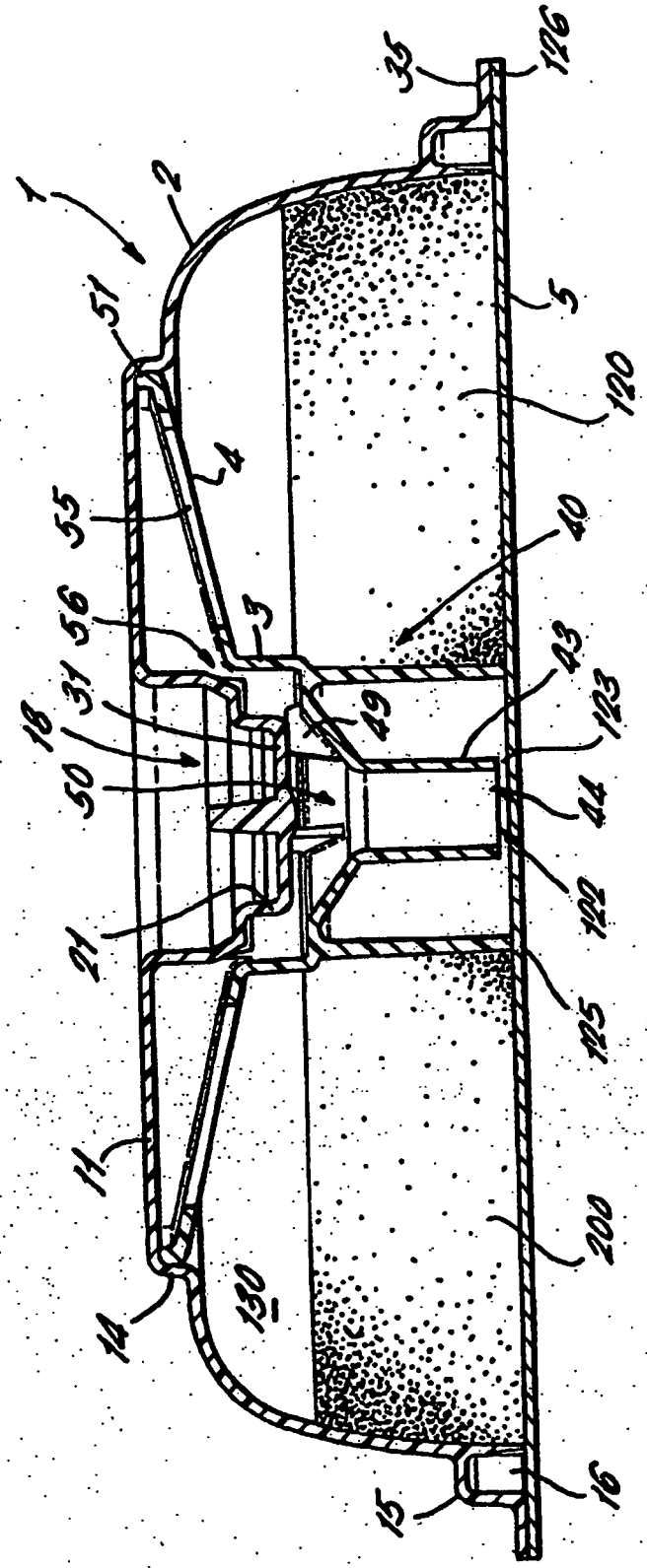
1
2
51
55
4
56
3
31
18
50
21
11
14
130
15
16
200
125
122
123
44
43
49
40
120
5
35
126

FIG 11.

FIG. 12.

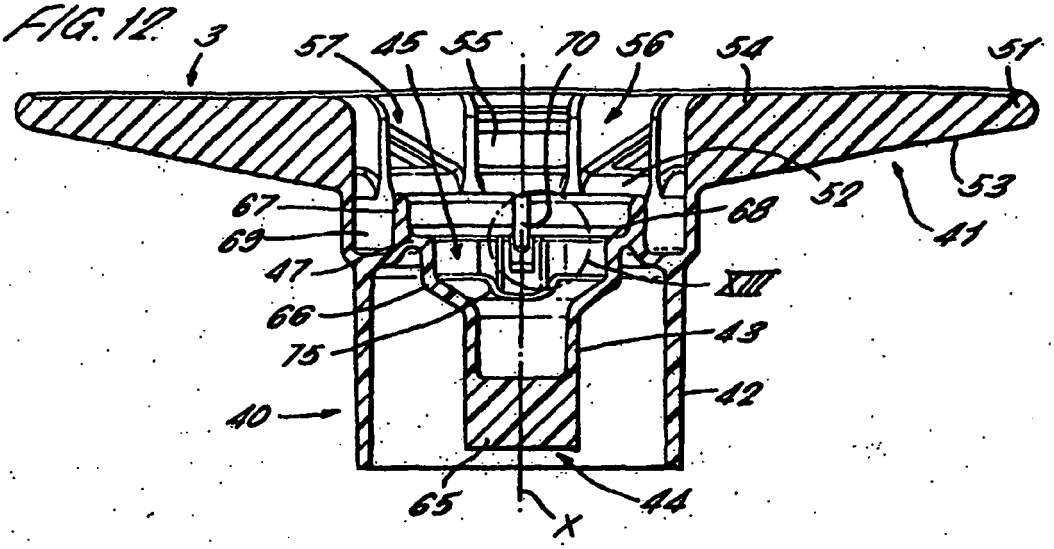

FIG. 13.

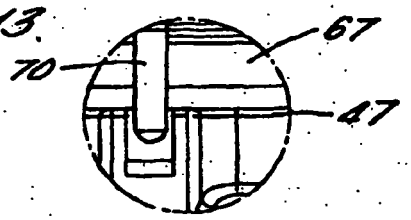

FIG. 14.

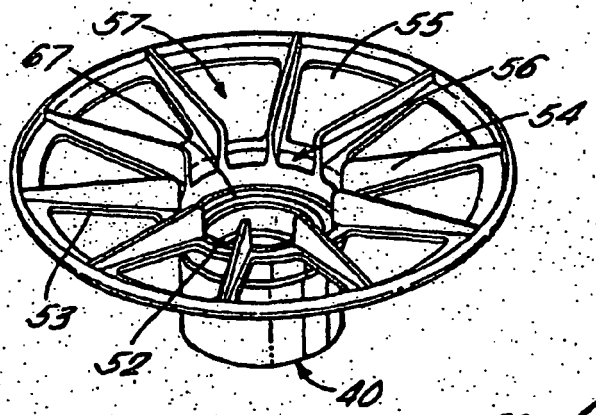

FIG. 15.

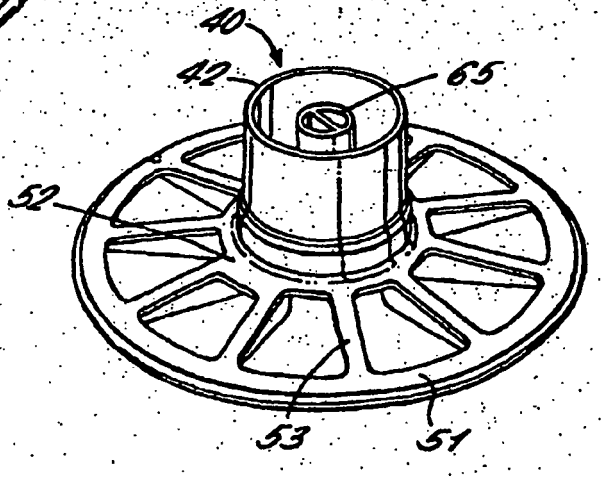

FIG. 16.

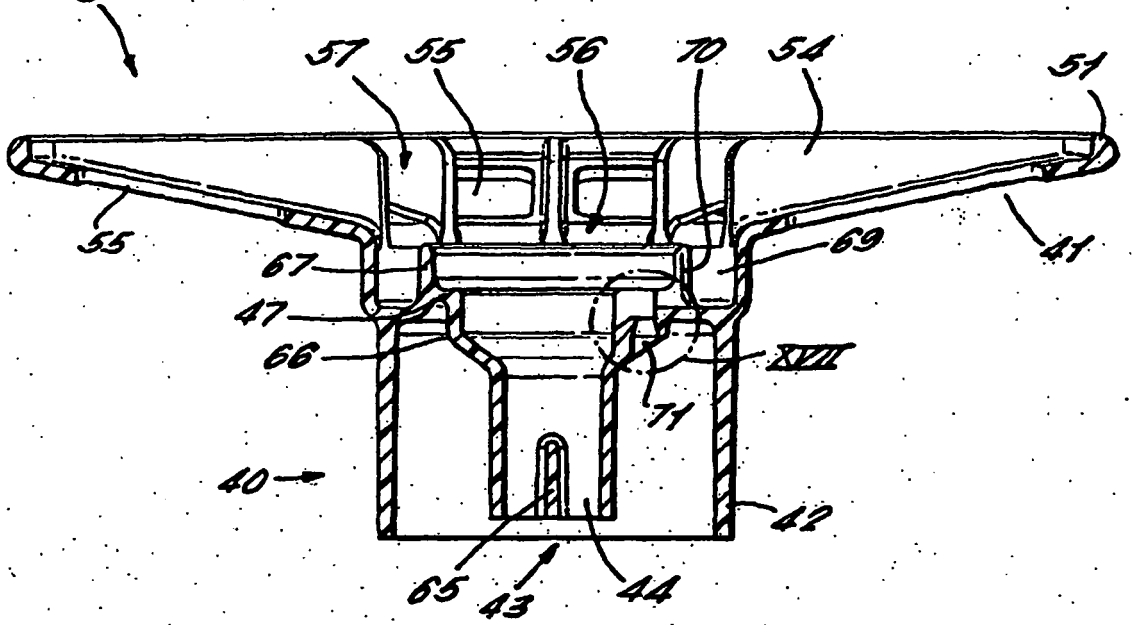
3
57
55
56
70
54
51
55
67
69
41
47
66
XVII
71
40
42
65
43
44

FIG. 17.

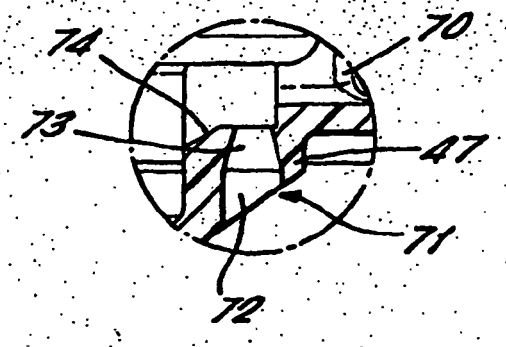
74
70
73
47
71
72

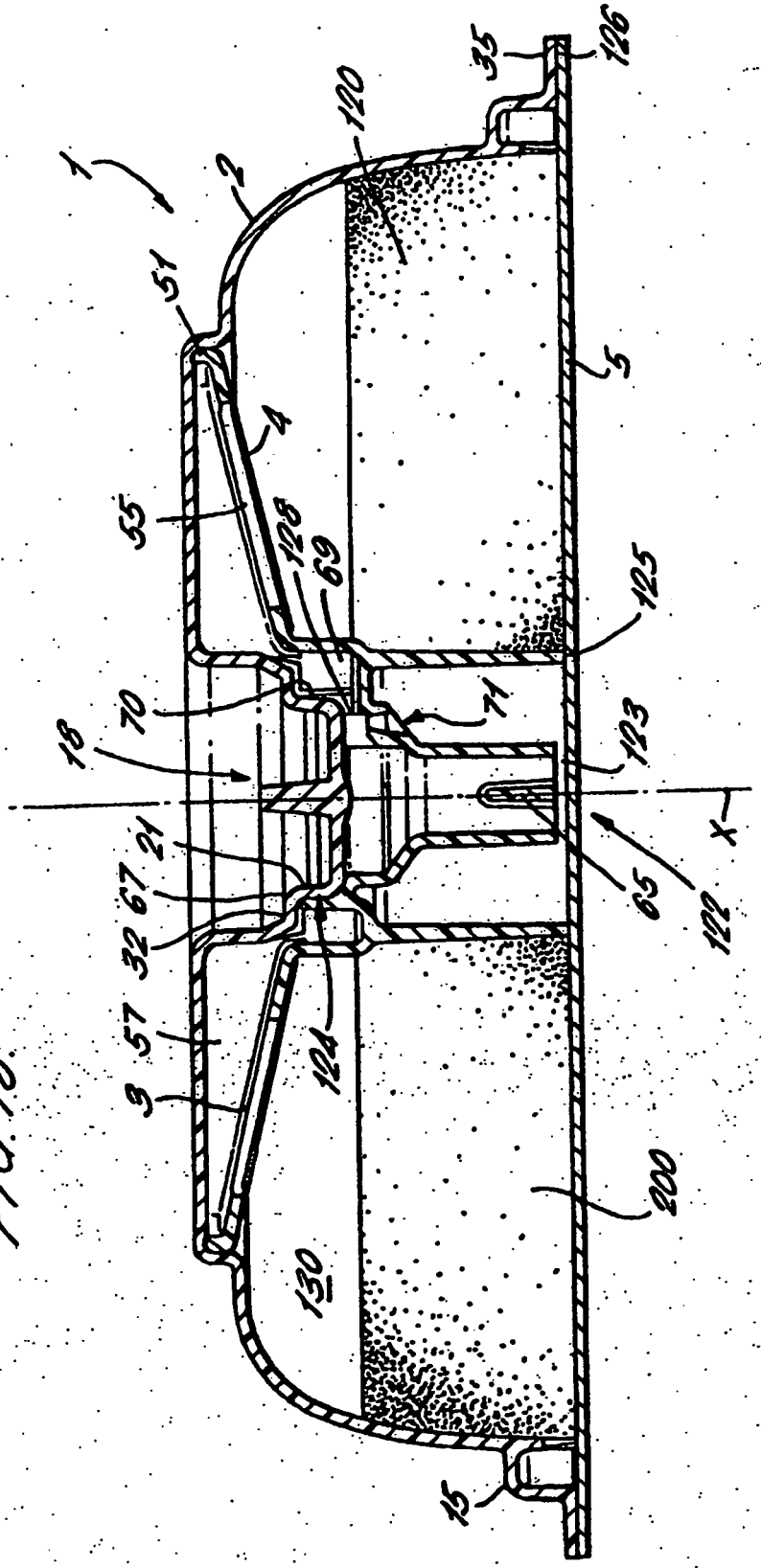
1
2
51
55
4
128
69
120
35
126
5
125
70
71
18
123
21
67
32
65
122
57
9
124
130
200
15
X

FIG. 18.

FIG. 19.

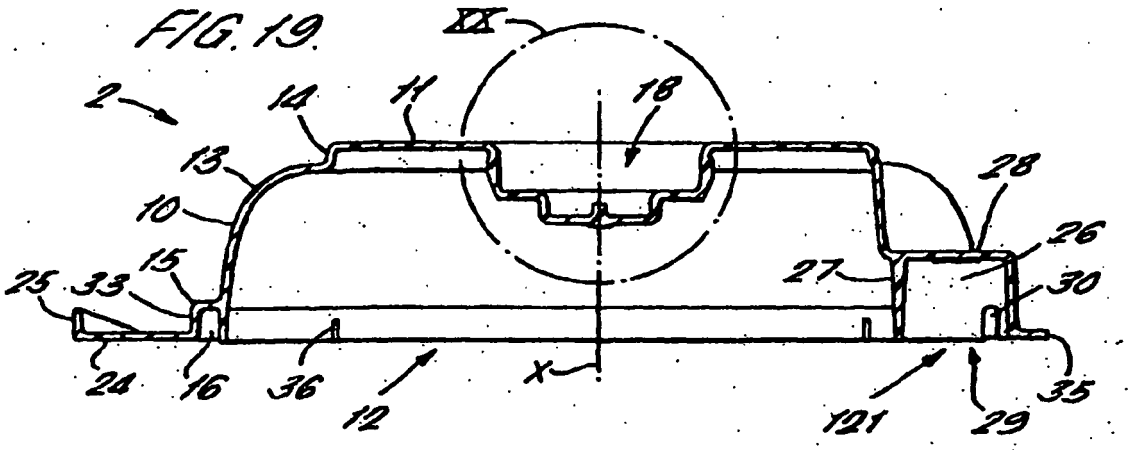
XX
2
14
11
18
13
10
28
26
15
27
30
25
33
24
16
36
12
X
121
29
35

FIG. 20.

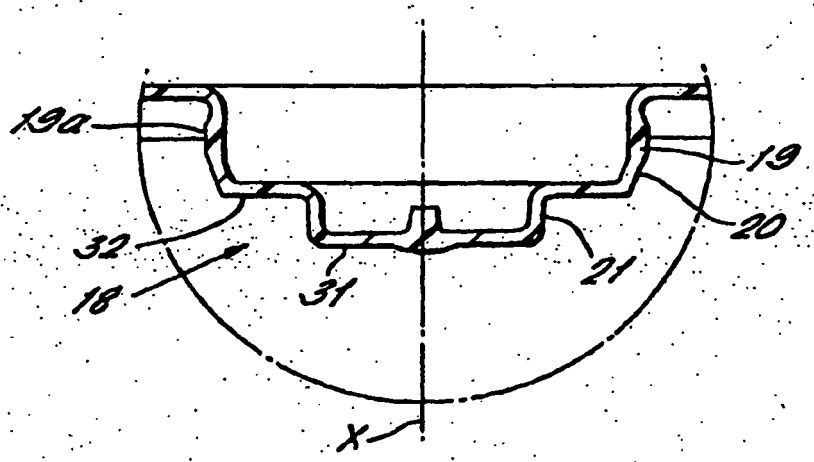
19a
19
20
32
21
18
31
X

FIG. 21.

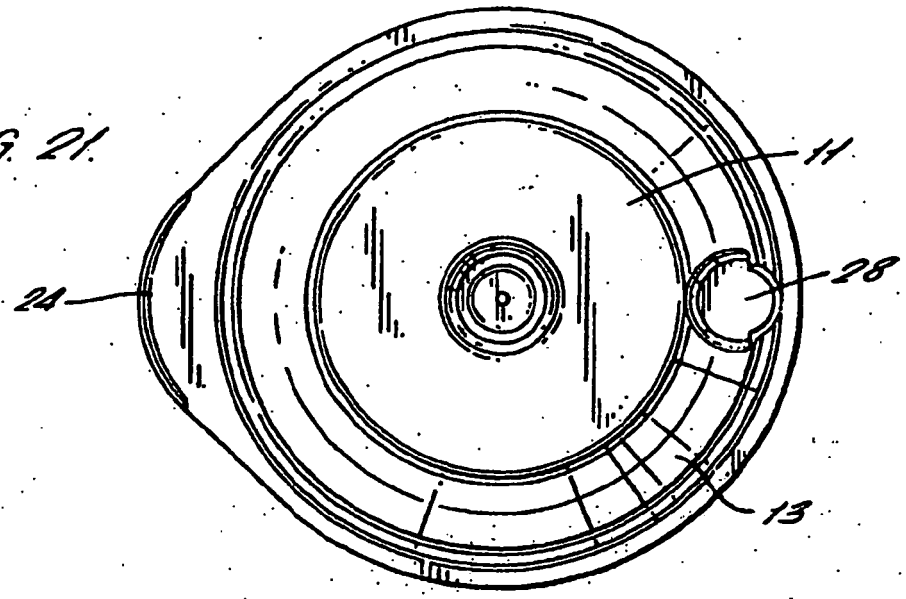

FIG. 22.

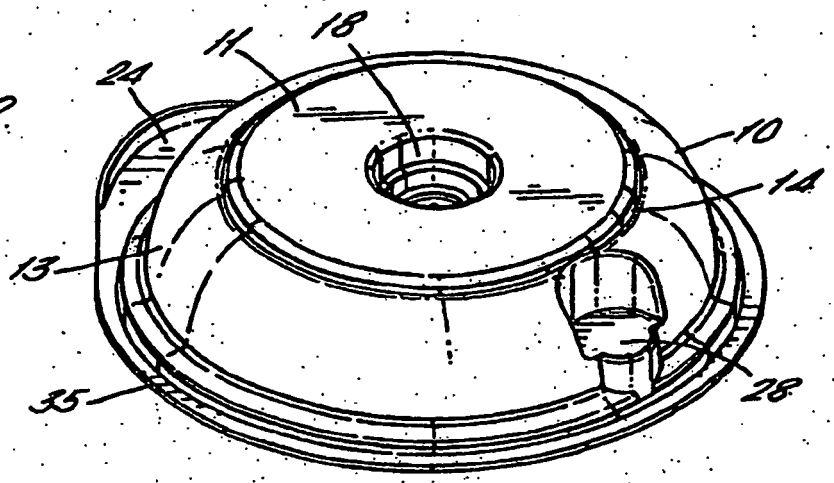

FIG. 23.

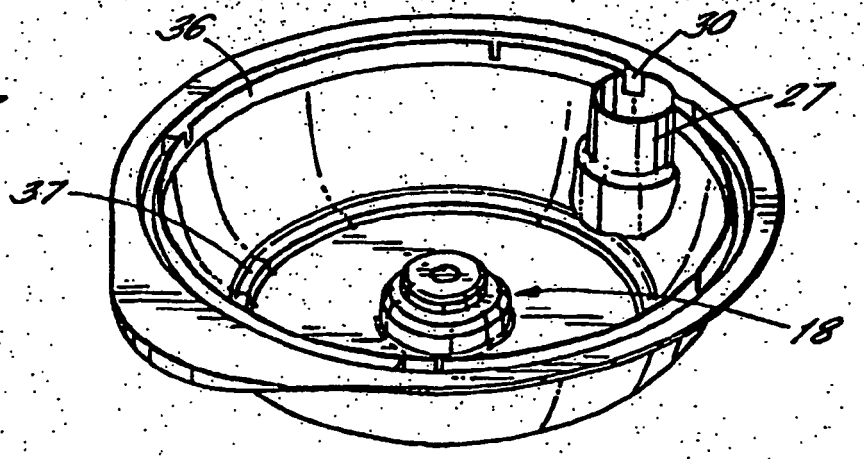

FIG. 24.

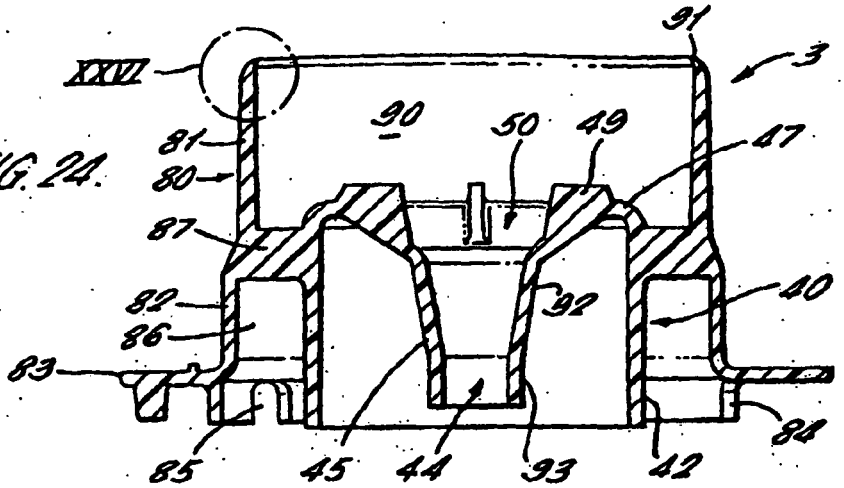

FIG. 25.

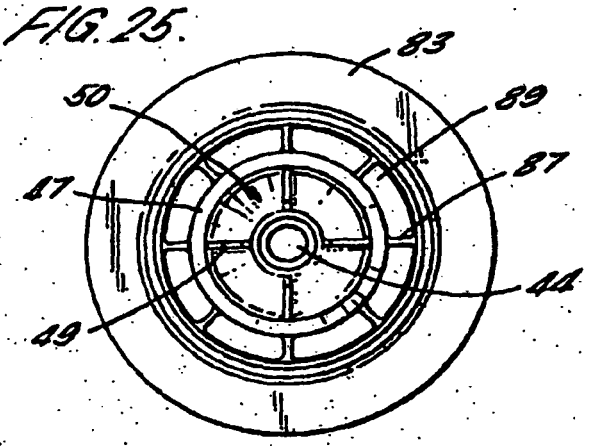

FIG. 26.

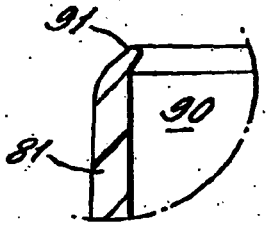

FIG. 27.

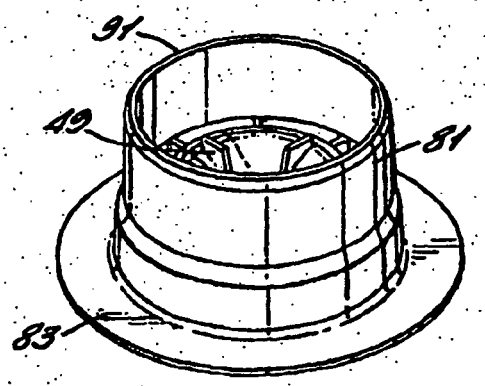

FIG. 28.

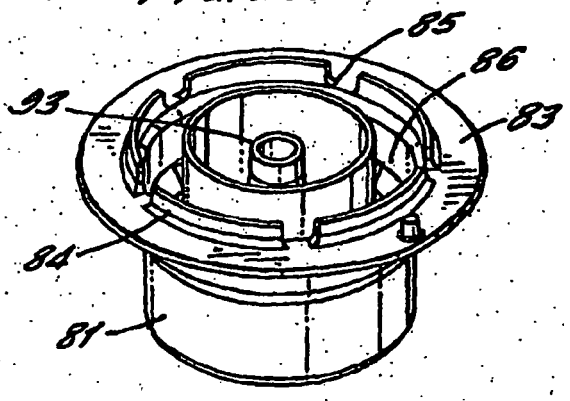

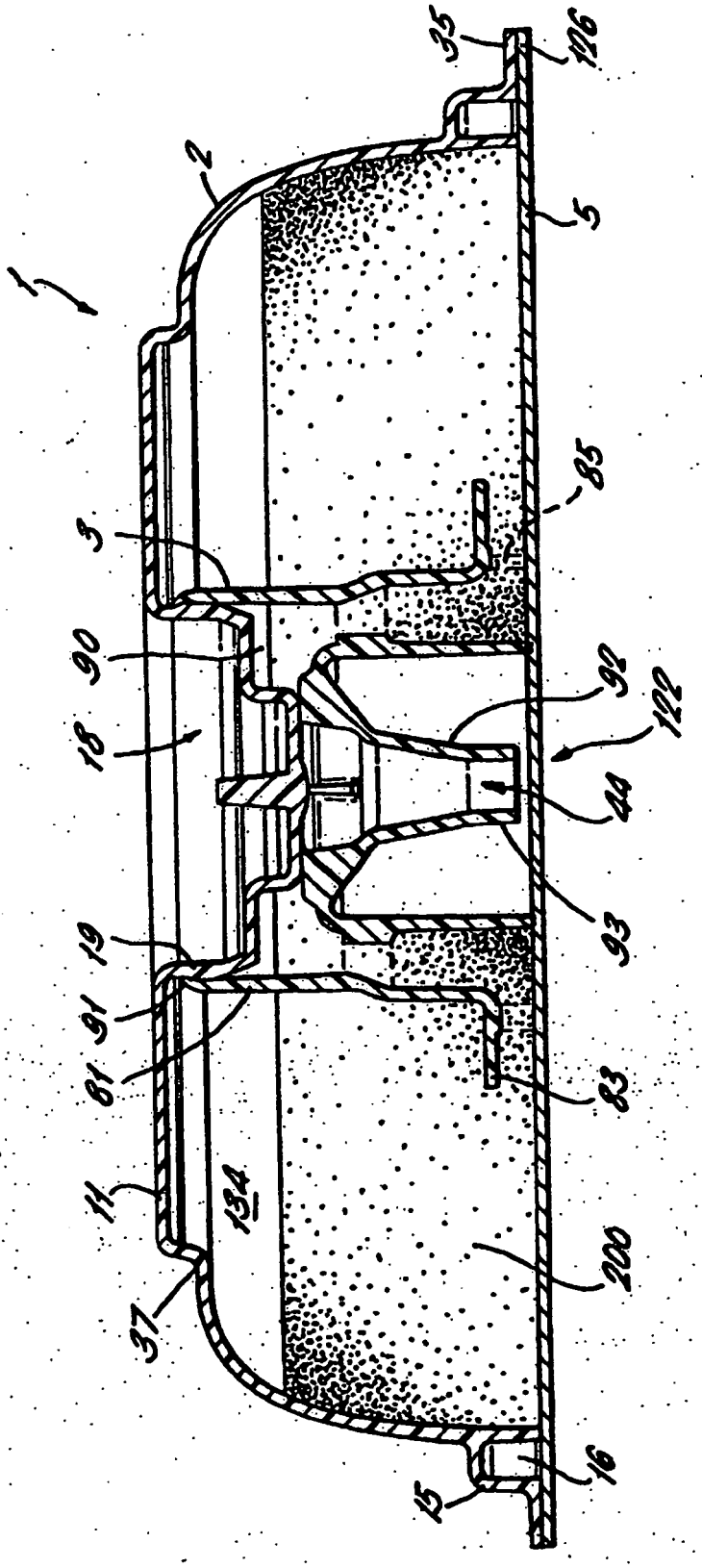

FIG. 29.

FIG. 30.

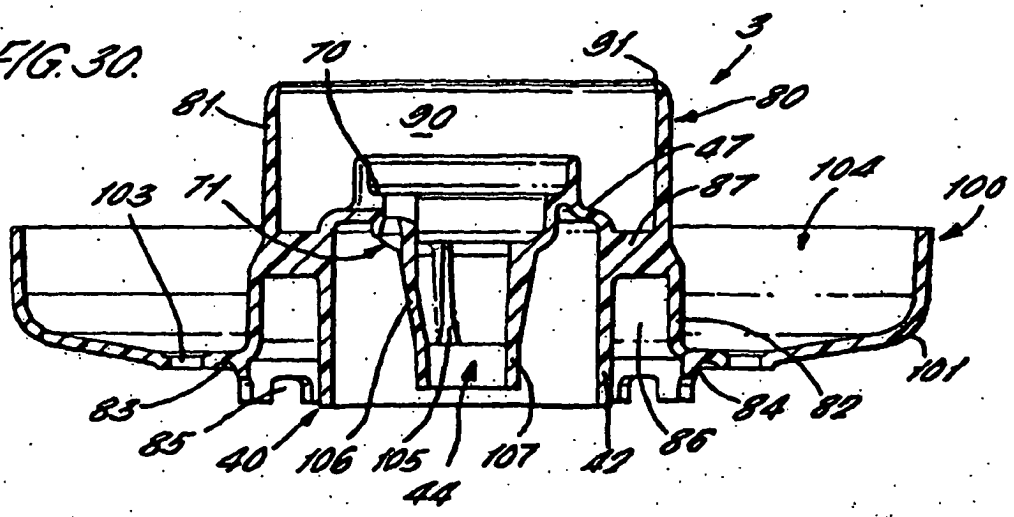

FIG. 32.

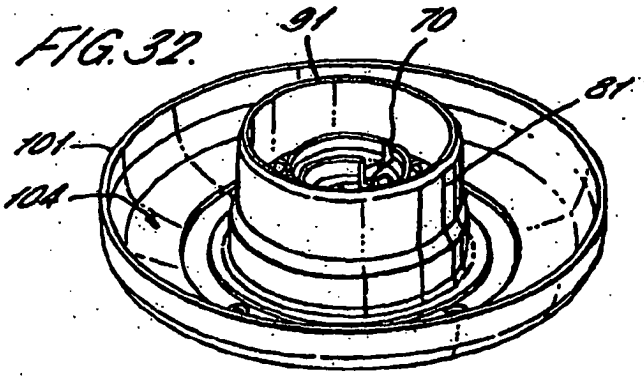

FIG. 31.

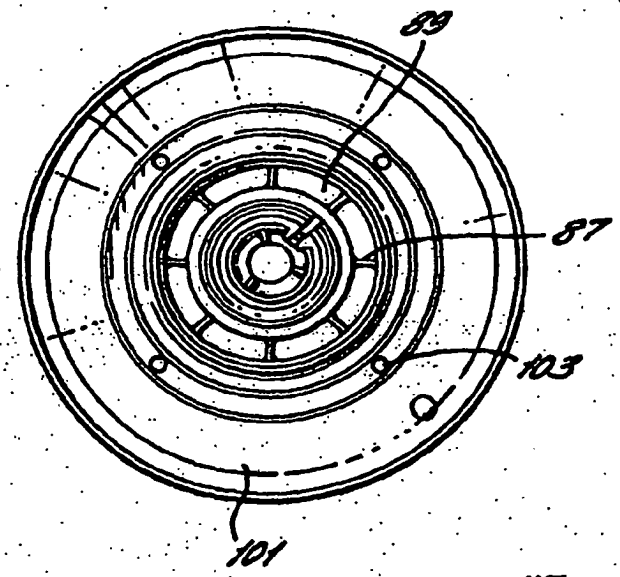

FIG. 33.

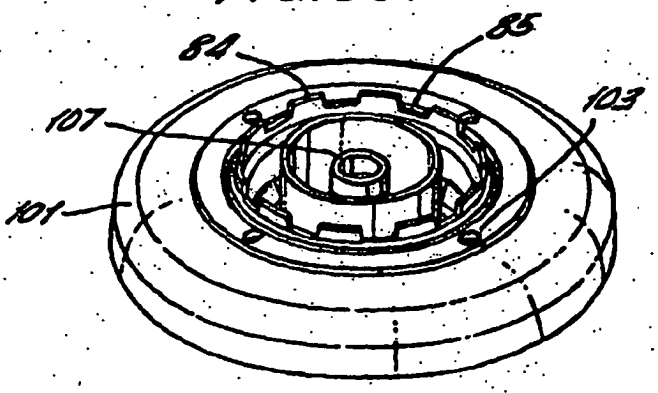

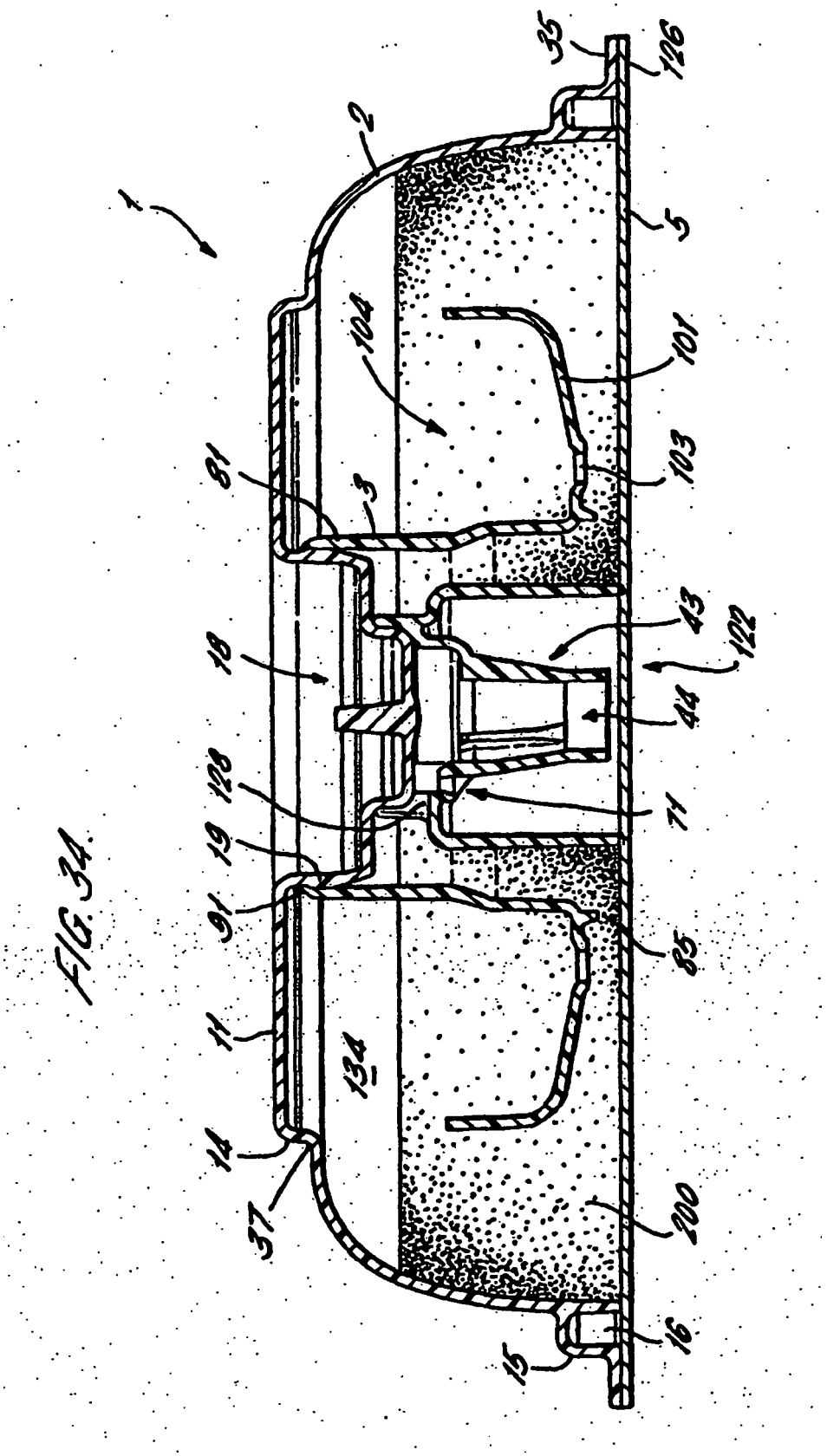
1
2
35
126
5
104
101
103
81
3
43
122
18
44
120
71
19
91
85
11
134
14
37
200
15
16

FIG. 34.

FIG. 35a.

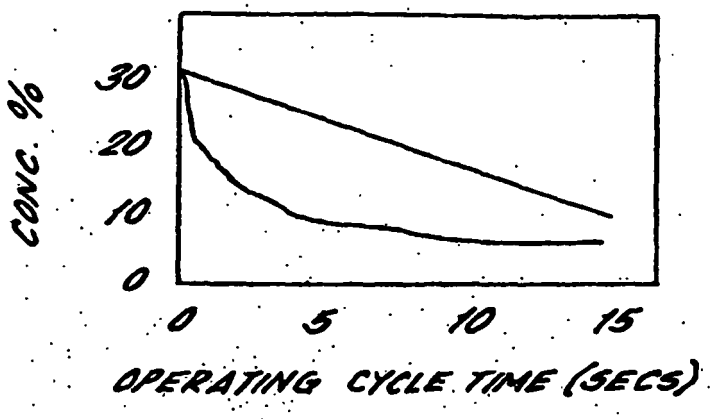

FIG. 35b.

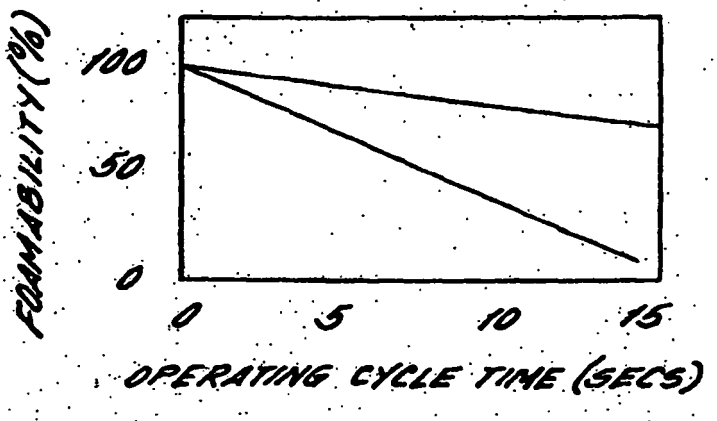

FIG. 35c.

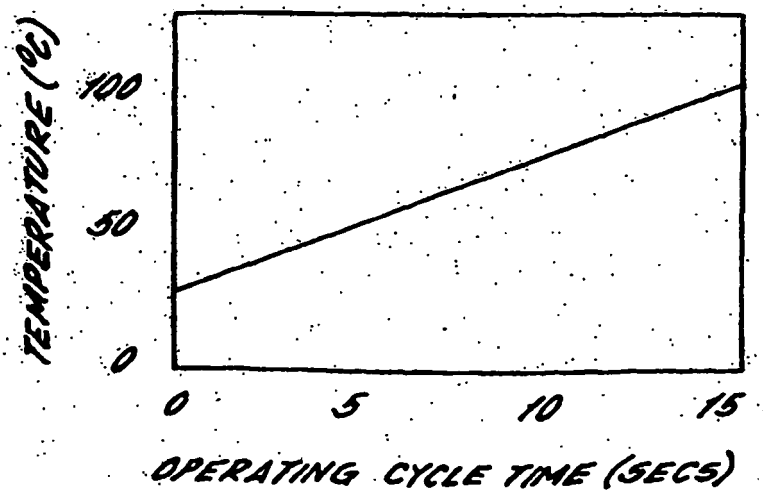

REFERENCES CITED IN THE DESCRIPTION

This list of references cited by the applicant is for the reader's convenience only. It does not form part of the European patent document. Even though great care has been taken in compiling the references, errors or omissions cannot be excluded and the EPO disclaims all liability in this regard.

Patent documents cited in the description

- US 5242702 A **[0003]**
- WO 0158786 A **[0004] [0082]**