July 1, 1947. W. POULIART 2,423,115

ELECTRICAL SIGNALING SYSTEM

Filed Jan. 22, 1943 2 Sheets-Sheet 1

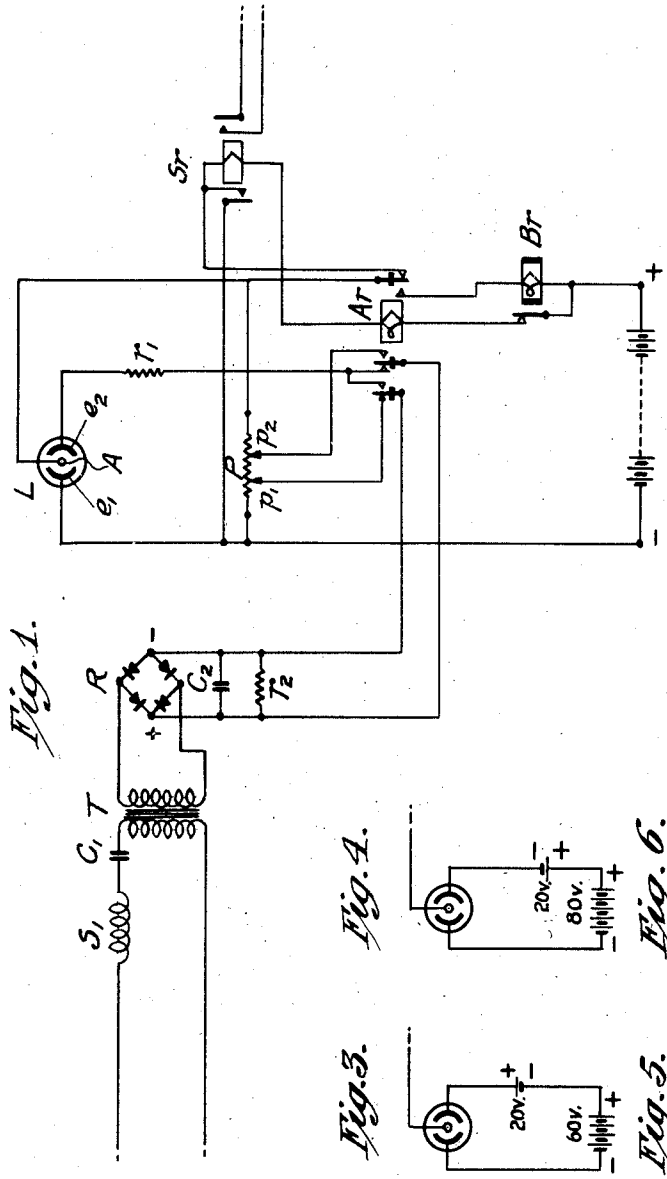

Fig. 1.

Fig. 4.

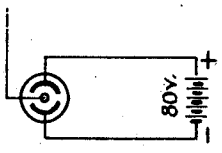

Fig. 6.

Fig. 3.

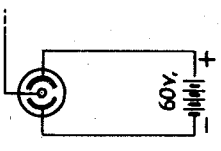

Fig. 5.

INVENTOR
WILLY POULIART

BY

ATTORNEY

July 1, 1947. W. POULIART 2,423,115

ELECTRICAL SIGNALING SYSTEM

Filed Jan. 22, 1943 2 Sheets-Sheet 2

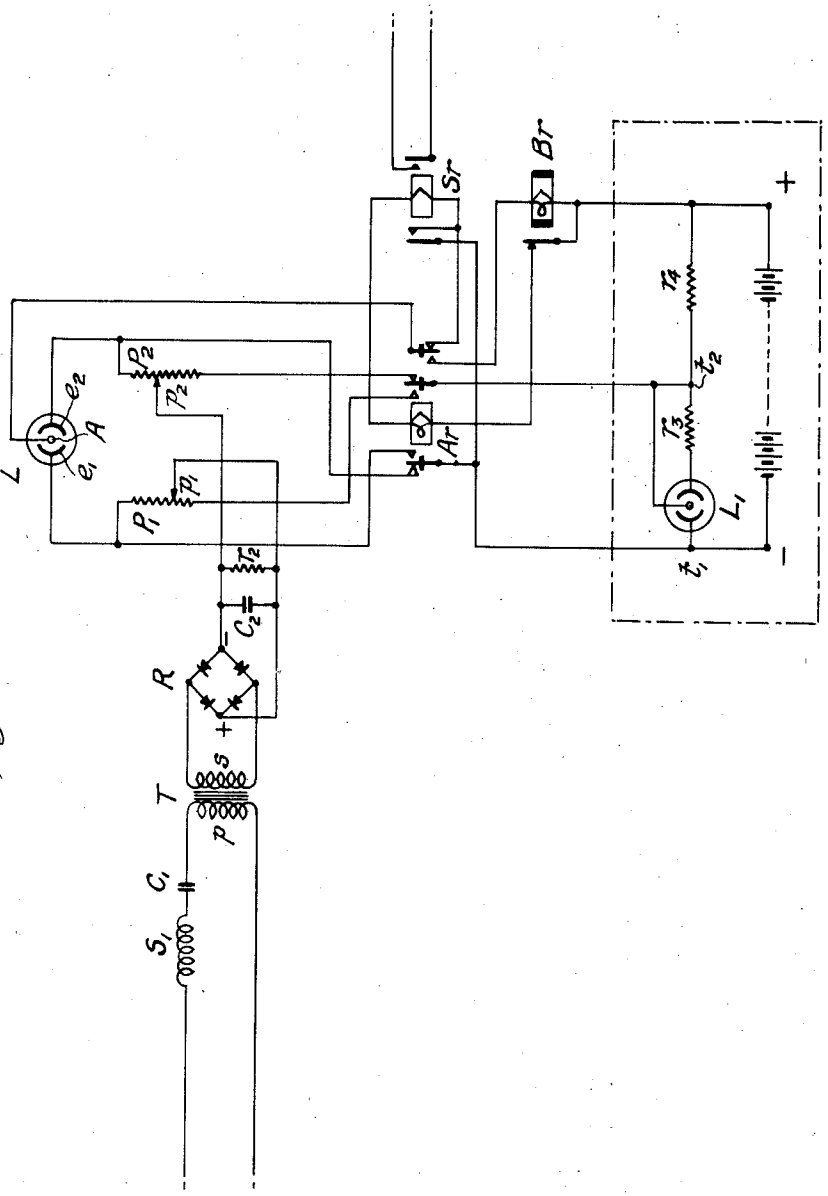

Fig.2.

INVENTOR
WILLY POULIART

BY

ATTORNEY

Patented July 1, 1947

2,423,115

UNITED STATES PATENT OFFICE

2,423,115

ELECTRICAL SIGNALING SYSTEM

Willy Hortense Prosper Pouliart, Antwerp, Belgium, assignor to International Standard Electric Corporation, New York, N. Y., a corporation of Delaware

Application January 22, 1943, Serial No. 473,275
In the Netherlands August 30, 1941

3 Claims. (Cl. 178—70)

1

The invention relates to signal transmission systems and more particularly to pulse receiving circuits.

Heretofore, in modulated carrier wave pulse receiving circuits, it has been the practice, either to impress the rectified modulated carrier wave, through an appropriate filter and transformer, directly upon a stepping relay, or to apply the carrier wave through a suitable transformer to the grid of a hot-cathode vacuum tube, in the plate circuit of which the stepping relay is inserted.

Both these methods present certain disadvantages and one object of this invention is to provide improved modulated carrier wave pulse-receiving circuits.

According to one embodiment of the invention, the signal receiving device, adapted for receiving and reproducing modulated carrier wave pulses, comprises a filter, a transformer, a bridge rectifier, a cold-cathode tube and a number of controlling relays associated therewith, the arrangement being such that the rectified carrier wave causes the temporary lighting of the cold-cathode tube at the beginning and at the end of each current pulse, each temporary lighting controlling the operation of the associated relays in accordance with the pulses received.

Another feature of this invention is that a first controlling relay inserted in the anode circuit of the cold-cathode tube and energized as a consequence of the lighting of this tube, causes the immediate and subsequent extinction of said tube by opening or short-circuiting of both the main and the control gap. The control anode biasing potential is, by the operating of said first controlling relay, increased to a value equal to or higher than the control gap breakdown voltage and the direction of the rectified carrier wave potential is at the same time reversed with respect to said biasing potential, in such a manner that the algebraical sum of this biasing potential and the rectified carrier wave potential remains smaller than the control gap breakdown voltage, so that the cold-cathode tube is prevented from being relit during the duration of the pulse.

At the end of the pulse, as soon as the rectified carrier wave potential disappears, the cold-cathode tube is relit by the now increased control anode biasing potential, resulting in the operation of a second controlling relay inserted in the tube anode circuit, operation of said second controlling relay causing the immediate extinction of the cold-cathode tube by opening or

2

short-circuiting of both the main and the control gap and re-establishing the normal conditions of a state of rest in the signal receiving circuit.

Finally it is a feature of the invention that the connections to the two control electrodes of the cold-cathode tube are changed over by the operation of the first named controlling relay in such a manner, that one control electrode is used as control anode for lighting the lamp at the beginning of the pulse, while the other control electrode is used as control anode for lighting the tube at the end of the pulse.

The invention is described by means of the drawing, in which Fig. 1 shows one embodiment of my invention using one gas discharge tube;

Fig. 2 shows another embodiment of my invention using two gas discharge tubes;

Figs. 3, 4, 5 and 6 show various conditions which the gas discharge tube of Fig. 1 may assume during the operation of this invention.

In Fig. 1 the incoming line comprises an inductance S_1 and a capacity C_1 as also the primary winding of transformer T, these elements being tuned to resonance with the frequency of the alternating carrier wave, utilized for signaling.

The secondary winding of transformer T is connected to a rectifying bridge R, across the output terminals of which a condenser C_2 and a resistance r_2 are connected. The purpose of capacity C_2 is to prevent that the instantaneous value of the rectified half-waves of the incoming alternating current fall below a certain minimum value, as will be explained later, while the purpose of resistance r_2 is to speed up the discharge of the condenser at the end of each pulse.

The cold-cathode tube L, referred to in this invention, is of the well known type which requires a specific control gap breakdown potential V_x to light the control gap between the two electrodes e_1 and e_2 and a substantially higher main gap breakdown potential V_y to light the main gap between the anode A and either of the two eletcrodes e_1 and e_2. Once the control gap has been lit, however, a sustaining potential V_z, which may be considerably lower than V_y is sufficient to maintain a current in the main gap.

It will be seen from Fig. 1 that the anode e_1 is connected permanently with the negative pole of the battery, while the controlling anode e_2 is connected to one of points P_1 or P_2 of potentiometer P, in series with the rectifying bridge. The anode A is connected to the positive pole of the battery in series with the relays S_r and A_r.

The purpose of the potentiometer is to apply a certain biasing potential on the control anode, in order to increase the sensitivity of the arrangement. The purpose of resistance r_1 is to reduce the current consumption in the control gap.

The biasing potential is smaller than the control gap breakdown voltage, so in the state of rest, the tube is not lit. This state is illustrated in Fig. 5.

In order that the following description may be more readily understood, Figs. 3, 4, 5 and 6 are now referred to. These figures represent the four conditions to which the cold-cathode tube is exposed during one pulse. Definite voltage values have been added to these figures for the purpose of clearer illustration only, so that these values are indicative only. These voltage values are in more or less correct relation to the actual working characteristics of a cold-cathode tube with a control gap breakdown voltage of 70 v.

Again referring to Fig. 1, when a pulse arrives, the rectified potential at the output terminals of rectifier R will be added to the potential of point p_1. The algebraical sum of the biasing potential and the rectified potential is so chosen that it exceeds the control gap breakdown voltage, with the result that the control gap and subsequently the main gap, will be lit. This stage is illustrated in Fig. 3.

Relays S_r and A_r will now operate due to current flowing through the anode circuit, the former relay closing any desired circuit such as a local stepping circuit, over its right-hand front contact.

Relay A_r is slower in operation than relay S_r and its armature therefore remains still on its back contact a certain time after the armature of relay S_r has closed its left-hand front contact with the result that both the main gap and the potentiometer remain short-circuited for a time sufficient to extinguish and de-ionize the tube. It also can be seen from Fig. 1 that relay S_r closes a holding circuit for itself, in series with relay A_r and independently of the anode circuit.

The operation of relay A_r brings about the following modifications in the condition of the various elements of the circuit:

(*a*) The anode A of the tube is changed over from relay S_r to relay B_r. This circuit is at the moment not operative, since the tube has been extinguished by the short-circuiting action just described.

(*b*) Over its two left-hand change over contacts relay A_r reverses the connections between the output terminals of the rectifier and the potentiometer. The rectified alternating current potential, which originally was added to the biasing potential, is now subtracted.

(*c*) Over its left inner front contact relay A_r increases the biasing potential to a higher value than the control gap breakdown voltage. Due to the fact that the rectified alternating current potential is now subtracted, the algebraic sum of biasing and rectified potentials is lower than the control gap breakdown voltage, so that the tube remains extinguished.

This stage is represented in Fig. 4 and remains in force during the whole duration of the pulse.

At the end of the pulse, the rectified alternating current potential disappears, with the result that the increased biasing potential is re-established to its full value and the control gap is again lit. This stage is represented in Fig. 6.

The anode circuit is now established by relay A_r through the winding of relay B_r, but this latter relay is slightly slow in falling off, so that the original anode circuit through the windings of relays S_r and A_r is only re-established after a certain delay. In the meantime, both the anode and the potentiometer are disconnected at the back contact of relay B_r, with the result that the tube is extinguished and gets sufficient time to become de-ionized.

One pulse has now been received and transmitted by the right front contact of relay S_r. All subsequent pulses are received in exactly the same manner as just described.

In the second embodiment of the new invention, as shown in Fig. 2, both the electrodes e_1 and e_2 are alternately used as control anodes. To this effect two different potentiometers are used and the voltage across these potentiometers is stabilized by means of the arrangement shown in the dotted rectangle of Fig. 2.

The latter arrangement comprises a cold-cathode tube L_1, which is permanently lit. It is a well known property of such a tube, that the main gap sustaining voltage remains practically constant within considerable variations of the working voltage, i. e. the voltage applied to the main gap circuit via an outside resistance.

The alternate use of electrodes e_1 and e_2 as control anode reduces the wear of the cathodes and improves the conditions for de-ionization of the control gap. The use of stabilized potentiometers increases the operating limits of the circuit as an impulse receiving device.

As soon as, in Fig. 2, a pulse arrives, the rectified potential at the output terminals of rectifier R will be added to the potential of point p_2 with the result that the tube will light. Electrode e_2 serves as cathode and electrode e_1 as control anode.

The lighting of the tube will cause the operation of the relays S_r and A_r, as previously explained, resulting in the extinction of the tube.

The operation of relay A_r disconnects potentiometer P_2 and connects potentiometer P_1 between points t_1 and t_2. Electrode e_1 is now connected to the negative pole of the battery and serves as cathode, while electrode e_2 serves as control anode.

The rectified potential at the output terminals is now subtracted from the normal biasing potential of electrode e_2 and the tube will not relight under these conditions, which persist during the whole duration of the pulse.

At the end of the pulse the rectified potential at the output terminals of R disappears with the result that the biasing potential of the electrode e_2 is re-established to its normal value, which is higher than the breakdown voltage of the control gap. The tube will, therefore, light and relay B_r will be operated by the anode current.

As previously explained, the energization of relay B_r will cause the extinction of the tube, by which the relays S_r and A_r release. The circuit has now reverted to the state of rest and is ready to receive subsequent pulses.

What is claimed is:

1. System of receiving and reproducing modulated carrier wave pulses, including a filter for selecting the carrier wave, transformer means fed through said filter, rectifier means fed from said transformer for developing a direct current from said waves, a cold cathode tube having a main gap and a control gap, a source of potential, biassing means including said source of potential for said control gap, a circuit including said recti-

fier and said biassing means for lighting said control gap at the commencement of the receipt of a pulse, a first control relay, a second control relay, a stepping relay, a circuit for said first control relay and said stepping relay including said main gap, means under the control of said first control relay for extinguishing said tube after a brief interval and for controlling said biassing means to change the bias of said control gap, means responsive to the cessation of a received pulse and including said biassing means for again closing a lighting circuit for said control gap, means responsive to the second lighting of said tube for energizing said second control relay, and means responsive to the actuation of said second control relay for again extinguishing said tube after a brief interval and for opening the circuit of said stepping relay.

2. System according to claim 1, further comprising potentiometer biasing means and in which said first control relay includes contacts for controlling said last mentioned means to cause the biasing potential of the control gap of

the tube to be increased to a value at least equal to the breakdown voltage of the control gap and for reversing the direction of the rectified carrier wave direct current output with respect to the potential of the biasing means, so that the algebraic sum of said biasing potential and the potential derived from said rectified carrier wave remains less than the breakdown voltage of said control gap, whereby the cold-cathode tube is prevented from relighting during the duration of a pulse.

3. System according to claim 1, in which said cold-cathode tube has two control electrodes, said source of potential comprises the steady discharge of a second cold-cathode tube, and said biasing means comprises two potentiometers, respectively connected to said two control electrodes, said first control relay being provided with contacts for alternatively connecting said potentiometers to said source, whereby said control electrodes function alternately.

WILLY HORTENSE PROSPER POULIART.