Jan. 24, 1956 E. E. JACKSON ET AL 2,732,100

REMOTE-CONTROL DISPENSING APPARATUS AND VALVE MECHANISM THEREFOR

Filed July 11, 1951 2 Sheets-Sheet 1

Fig. 1.

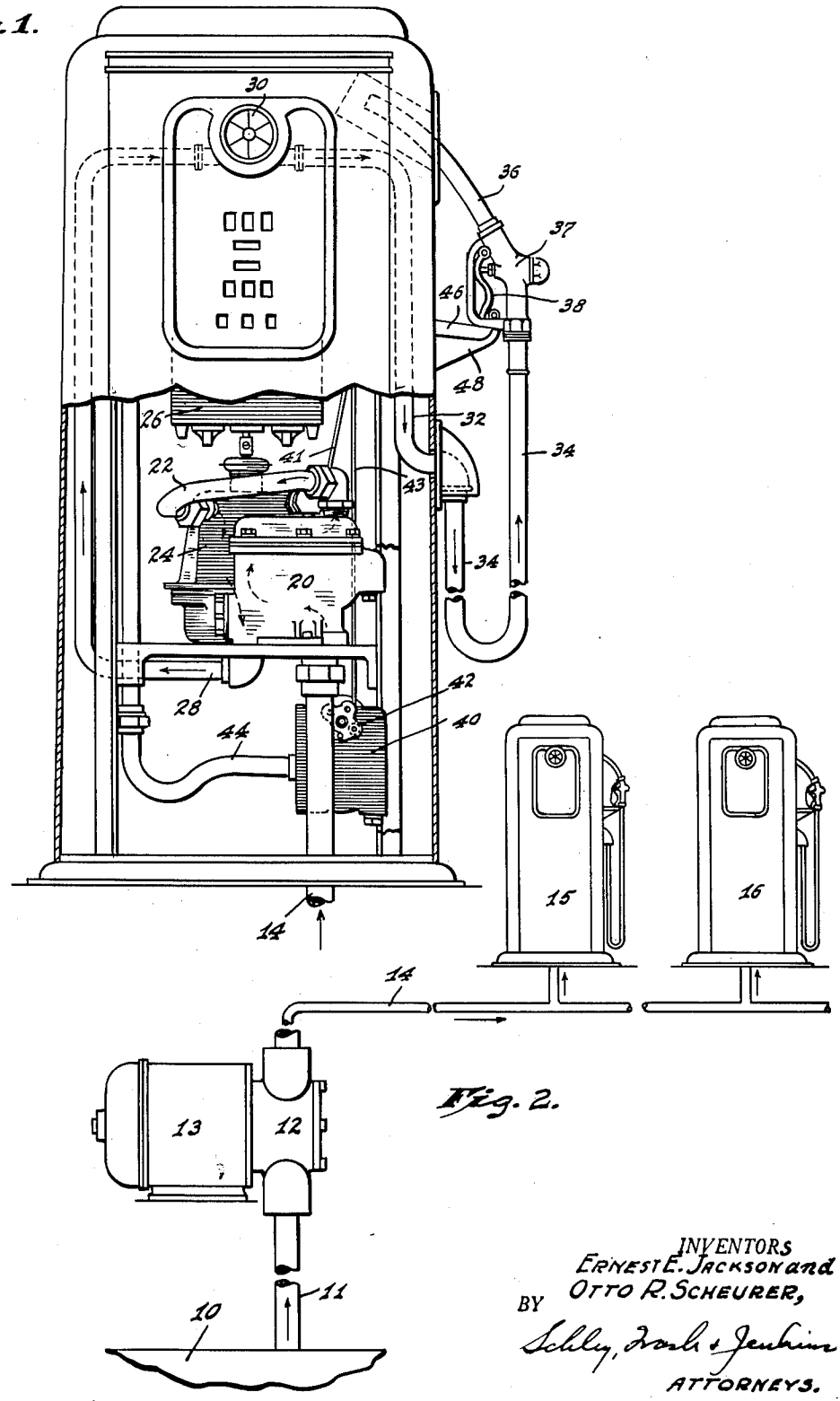

Fig. 2.

INVENTORS
ERNEST E. JACKSON and
OTTO R. SCHEURER,
BY
Schley, Frank & Jenkins
ATTORNEYS.

Jan. 24, 1956 E. E. JACKSON ET AL 2,732,100

REMOTE-CONTROL DISPENSING APPARATUS AND VALVE MECHANISM THEREFOR

Filed July 11, 1951 2 Sheets-Sheet 2

Fig. 3.

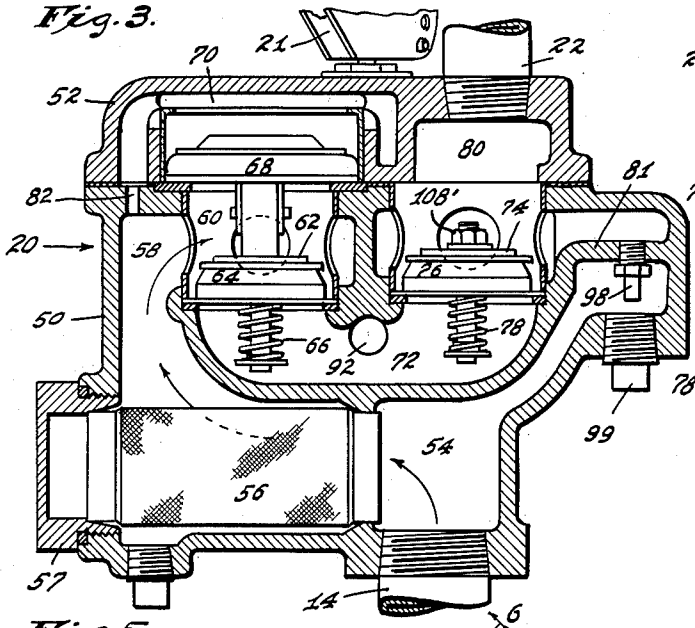

Fig. 4.

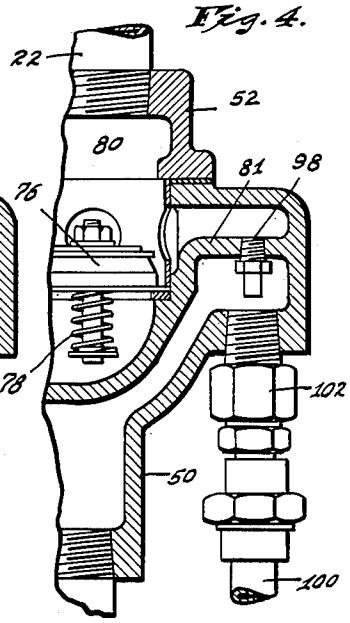

Fig. 5.

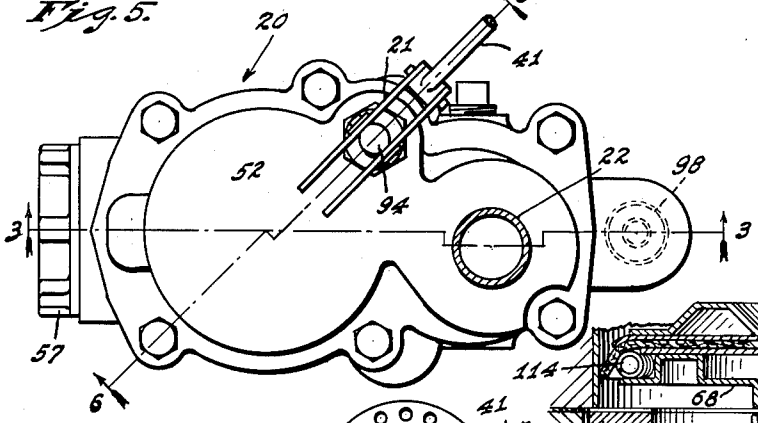

Fig. 6.

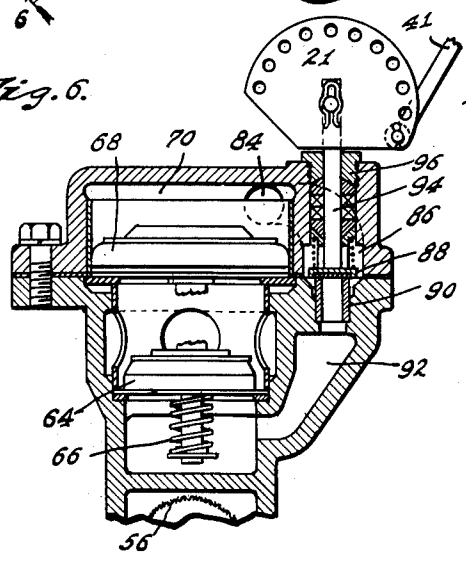

Fig. 7.

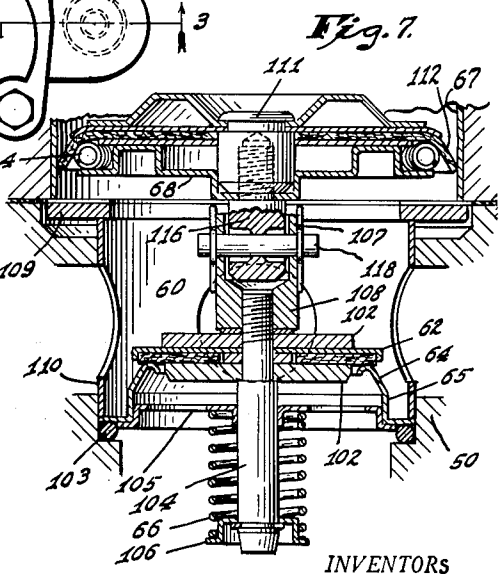

INVENTORS
ERNEST E. JACKSON and
OTTO R. SCHEURER,
BY Schley, Rash & Jenkins
ATTORNEYS.

United States Patent Office 2,732,100
Patented Jan. 24, 1956

2,732,100

REMOTE-CONTROL DISPENSING APPARATUS AND VALVE MECHANISM THEREFOR

Ernest E. Jackson and Otto R. Scheurer, Fort Wayne, Ind., assignors to Tokheim Corporation, a corporation of Indiana

Application July 11, 1951, Serial No. 236,134

10 Claims. (Cl. 222—73)

This invention relates to apparatus for dispensing liquids, such as hydrocarbon fuels and especially gasoline, and is concerned with the so-called "remote" system for dispensing gasoline, in which the gasoline is dispensed from one or more stands remote from the pump which delivers it to such stand or stands. The invention is particularly directed to valve mechanism for use in such a system, and to the combination of such valve mechanism with other parts of the system. This application is a continuation-in-part of copending application Serial No. 186,815, filed September 26, 1950, which discloses a remote-control dispensing system.

Apparatus for dispensing gasoline in accordance with the so-called remote system normally includes an underground storage tank for the gasoline, a motor-driven pump which may be located in or adjacent the storage tank, and a supply line leading from the pump to a plurality of dispensing stands. Each dispensing stand usually contains a meter and a register or computer, and each stand is provided with a dispensing hose terminating in a valved and manually operable nozzle by which delivery flow from its stand is primarily controlled. Each stand also includes a control switch for the pump motor, and such motor may be energized from any one or more of the several dispensing stands. Customarily, the switch control is actuated manually upon removal of the delivery nozzle from its storage position. The pump used may be of any desired type, for example either a centrifugal pump or a displacement pump, and if it is a positive displacement pump it will normally be provided with a pressure responsive by-pass valve. In such dispensing apparatus it is usually desirable to maintain the entire delivery line, from the storage tank through to the dispensing nozzle, full of gasoline; and when the dispensing stand contains a meter, it is especially important to maintain the dispensing line in the dispensing stand full of gasoline and to prevent back flow therethrough, in order to avoid errors in metering.

Of special importance here is the fact that each stand must contain a valve which positively cuts off flow of gasoline to or in such stand except during operation of that stand. When the supply pump is actuated from any one stand of a multiple stand system, the pump delivery pressure is exerted at all stands of the system, and in each stand which is not in use, such pressure should be blocked, preferably at the entrance to the stand, to avoid its imposition on the meter and other mechanism of the stand and to avoid any possibility of leakage from the unused stand. Ordinarily, such a valve is connected for operation by the motor-switch actuating lever of the stand, so that the valve at each stand will be opened concurrently with closing of the pump-motor switch at the stand.

With the valves used heretofore, it has been difficult, and often extremely difficult, to open the valve at a second stand if the pump is already in operation for some other stand. Under these conditions, the valve at the second stand is already under pump pressure which opposes its opening movement.

It is an object of our invention to provide improved apparatus for such a remote system of gasoline dispensing, and especially to provide a dispensing stand which is adapted for use with various suitable supply systems. It is a special object of our invention to provide improved dispensing stand apparatus which permits dispensing stands to be manufactured in a standard construction suitable for use in various remote dispensing systems without any necessity for variation in the dispensing stand depending on the character of supply system with which it is to be connected. It is an object of our invention to overcome difficulties arising from the fact that the pump is remote from the dispensing stand, and to overcome difficulties which arise from the fact that in a multiple-stand installation the common pump will normally be of larger capacity than is needed for a single stand, and from the fact that the pump pressure is exerted at all stands whenever the pump is energized from any one stand. It is an object of our invention to provide valve mechanism which positively cuts off flow to a stand except when that stand is in dispensing operation. It is an object of our invention to provide a modulating valve in each dispensing stand, which will modulate the flow thereto and avoid extreme and abrupt pressure variations during operation, and which will facilitate operation of the nozzle valve, especially to avoid roughness and erratic operation during opening and closing of the nozzle valve and when the nozzle valve is but slightly open. It is an object of our invention to obtain both that modulation and that positive cut off with a single valve. It is an object of our invention to combine with such modulating valve mechanism a check valve which will maintain the dispensing line in the stand full of gasoline and which will cooperate in the operation and control of the modulating valve. It is an object of our invention, by means of such valve mechanism, to protect the dispensing line and especially the meter and dispensing hose of a dispensing stand from excessive pressures and from repeated impositions of pump pressure as the pump is operated from other stands. It is an object of our invention to provide valve mechanism which avoids the difficulties heretofore encountered in actuating a second stand when some other stand of a multiple-stand system is already in operation. It is an object of our invention to combine our valve mechanism in a valve assembly unit which may be installed as such in dispensing stands of various designs.

In accordance with our invention, we combine with remote dispensing apparatus of the type described above a modulating and shut-off valve biased to closed position and preferably closing with pressure in the direction of flow. During dispensing operation, we control the position of such valve in response to a differential in pressure between that in the down-stream flow line from such valve and that in a bypass having a restricted communication with the upstream portion of the flow line; and under such control the valve acts as a modulating valve. During stand-by, we close the by-pass and render the valve control mechanism inoperative, as by closing a pilot valve in the downstream outlet of said bypass. The valve is then inoperative as a modulating valve and acts as a check valve closing in the direction of flow, to positively shut off flow from the pump to the dispensing stand. Change from modulating operation to shut-off condition is controlled by the pilot valve, which requires but a small operating force and can easily be operated jointly with the pump-motor controlling switch of the dispensing stand.

In combination with this valve mechanism, we provide a check valve, opening in the direction of flow, and positioned to prevent reverse flow in the meter or from the meter and hose to the modulating valve and

pilot valve. This not only maintains the meter and hose full of gasoline but prevents any back-pressure or reverse flow of gasoline from opening the modulating valve and from interfering with the desired operation of the modulating valve mechanism.

To prevent excessive pressures in the meter and hose, such as might result from a temperature rise therein, we provide a spring-loaded pressure-responsive relief valve between the down-stream side of the check valve and the up-stream side of the modulating valve. The described valve arrangement will eliminate the necessity for, and will ordinarily be used without, any foot or line check-valve in the tank or in the line therefrom. Where, however, a foot or line check-valve is used, we provide for connecting the relief valve to a bleed line which leads to the tank or otherwise by-passes the foot or line check-valve.

The accompanying drawings illustrate our invention. In such drawings, Fig. 1 shows a dispensing stand embodying our invention; Fig. 2 is a somewhat diagrammatic showing of remote dispensing apparatus; Fig. 3 is a vertical section of a valve assembly unit embodying our invention and taken on the line 3—3 of Fig. 5; Fig. 4 is a fragmentary vertical section showing a modification of the valve assembly of Fig. 3, in which pressure relief is through a bleed line; Fig. 5 is a top plan view of the unit shown in Fig. 3; Fig. 6 is a vertical section taken on the line 6—6 of Fig. 5; and Fig. 7 is an enlarged vertical section showing details of the modulating valve construction.

The remote dispensing apparatus shown in Fig. 2 comprises a storage tank **10** connected by a suction pipe **11** to a pump **12** driven by a motor **13**. Such pump **12** discharges through a supply line **14** leading to a plurality of dispensing stands, two such stands **15** and **16** being shown.

As shown in Fig. 1, in each dispensing stand the supply line **14** is connected to a valve assembly unit **20**, and this in turn is connected through a pipe **22** to a meter **24** which drives a computer and register **26**. The metered outflow from the meter **24** leaves the meter at the bottom and passes through a pipe **28** to a visible flow gauge **30** at the top of the stand, and then to a pipe **32** connected to the dispensing hose **34**. The hose **34** carries a dispensing nozzle **36** containing a valve **37** operable manually by means of the handle **38**. The nozzle and nozzle valve may be of standard construction and the valve **37** will normally include a valve member which closes in the direction of flow through the nozzle, so that pressure in the dispensing line to that valve **37** will tend to maintain that valve in closed position. The nozzle **36** is shown in storage position, supported on a storage hanger **48**.

In addition to the gasoline-line apparatus described above, the dispensing stand includes an electrical junction box **40** containing a switch actuated by a lever **42** and electrically connected in known manner to control the remote pump-motor **13**. The junction box **40** may be connected by a conduit **44** to lamps for lighting the dispensing stand.

The valve unit **20** carries a pilot-valve control cam **21**, and such control cam and the switch lever **42** are jointly connected, as by rods **41** and **43**, to a manually operable lever **46** associated with the nozzle hanger **48**. This manually operable lever **46** is controlled in the usual way. When the nozzle **36** is removed from the hanger **48**, such lever **46** may be raised manually, to put the dispensing stand in operation. Such movement moves the pilot valve control cam **21** to open the pilot valve and to put the valve mechanism in condition for operation, as will be described. It also moves the switch lever **42** to close the motor switch and energize the circuit to the pump motor **13**. When the nozzle **36** is replaced on the hanger **48**, it depresses the lever **46**, which closes the pilot valve and opens the motor switch.

As is shown in Fig. 3, the valve assembly unit **20** comprises a main casing **50** and a top casing **52**. The supply line **14** is connected to the bottom of the main casing **50** and leads to an inlet chamber **54**. The outlet from this inlet chamber **54** is to the interior of a screen **56** removably mounted within the casing **50** through a threaded opening closed by a cap **57**. From the screen, a passage **58** leads upward to a modulating valve chamber **60**. The modulating valve mechanism comprises a valve disk **62** biased downward against its seat **64** by a spring **66**, and connected to a piston **68** lying below a bypass chamber **70**. The outlet side of the modulating valve **62—64** leads to a transfer passage **72**, which in turn leads to a check valve comprising a valve disk **74** opening in the direction of flow and biased to closed position against its seat **76** by a spring **78**. Above the check valve **74** there is an outlet chamber **80** connected to the pipe **22** leading to the meter **24** of the dispensing stand.

The bypass chamber **70** is in restricted communication with the passage **58** on the upstream side of the modulating valve **62**, through an inlet opening **82**. As is seen in Fig. 6, the bypass chamber **70** has an outlet **84** leading to a pilot valve chamber **86** which, when the pilot valve **88** is opened, is put into communication through a sleeve **90** with a side passage **92** which opens into the transfer passage **72**. The pilot valve **88** comprises a valve disk spring-pressed downward against a seat formed on the upper end of the sleeve **90**.

The restricted inlet opening **82** to the by-pass chamber **70** is of substantial size, as indicated in Fig. 3, but is restricted with respect to the outlet through the pilot valve and has less flow capacity than the open pilot valve.

The stem **94** of the pilot valve extends upward through a stuffing box and a packing nut **96** and its upper projecting end carries a pair of plates forming the cam control **21**. These are pivoted to the stem **94**, and the arrangement is such that upon upward actuation of the rod **41** the cam **21** is rotated and reacts against the upper face of the packing nut **96** to lift the stem **94** and to open the pilot valve **88**.

The outlet chamber **80** and the inlet chamber **54** are provided with extensions lying on opposite sides of a common wall **81**, and such wall carries a spring-loaded pressure-relief valve **98** opening from the outlet chamber **80** toward the inlet chamber **54**. Immediately below the valve **98**, the casing **50** is fitted with a removable plug **99**. In normal use, when there is no foot valve or other line check valve associated with the inlet end of the supply line, this plug **99** will remain in the casing **50**, as shown in Fig. 3. When, however, the supply line is provided with a line check-valve or a foot valve, the arrangement of Fig. 4 is used. Here, the plug **99** is replaced by a fitting **102** containing a spring-loaded pressure-relief valve similar to the valve **98**; and such fitting **102** is connected to a bleed line **100** leading to the tank or to the suction line, to bypass the foot valve or line check valve contained therein.

The modulating valve and check valve shown are largely made up of formed sheet metal parts, and their construction is shown in detail in Fig. 7. The modulating valve is mounted in a sleeve or cage **110** of simple cylindrical form and provided with a plurality of lateral inlet openings. The seat **64** of the valve is formed at the upper edge of an annular sheet metal member **65** of hat-shaped section, which has a mounting flange at its lower edge underlying the lower end of the cage **110**. An annular gasket **103** beneath the flange of the member **65** forms a seal with a shoulder in the casing **50**.

The valve poppet comprises a pair of washers **102** clamped against opposite sides of the valve disk **62** which carries a sealing washer of flexible material. This poppet assembly is carried by a stem **104** which extends downwardly through a guide plate **105** nested in the bottom of the valve seat member **65**. The spring **66** lies between the guide plate **105** and a retainer **106** fixed on the bottom

of the stem **104**. The upper end of the stem **104** is threaded to receive a clamping nut **108**. In the modulating valve shown, the nut **108** is formed at its upper end as a yoke **107**.

The piston **68** rides in a cylinder **67** formed as a sheet metal sleeve slipped into a bore in the upper casing **52**.

The check valve **74—76** and its associated parts are substantially duplicates of the corresponding parts of the modulating valve **62—64**, in this case, however, a plain nut **108'** is used instead of the yoke nut **108**, and the piston **68** is omitted.

The cage **110** for the modulating valve is held in place by a retaining ring **109**, which is fixed in place when the two casing parts are brought together and which in turn supports the sleeve **67** which forms the cylinder for the piston **68**. The cage for the check-valve is held in place directly by the top casting **52**.

The use of sheet metal parts and inserts for the valve structure, as shown, simplifies construction and provides for easy assembly of the valve mechanism and substantially reduces machining requirements on the casings **50** and **52**.

The piston **68** comprises a hub **111** having a pair of sheet metal members secured at its upper end which form a backing for the flexible cup **112** of the piston. A second pair of sheet metal members support the cup **112** from below, and hold an annular coil spring **114** in expanding engagement with the skirt of the cup **112**. The lower supporting member is secured against the lower end of the hub **111** by a stud **116** threaded into the hub **111**. The stud **116** lies within the yoke **107**, and both are bored transversely to receive a connecting pin **118**. The outer ends of the bored hole in the stud **116** are counterbored to leave only a narrow central land for engagement with the connecting pin **118**, which permits some universal movement between the valve and piston to permit them to align themselves with their associated parts.

Operation is as follows:

It is assumed that the system has been primed and that the delivery line is full of gasoline, from the tank **10** through the suction pipe **11**, the pump **12**, the supply line **14** and the dispensing line in each of the several dispensing stands connected thereto. The nozzles **36** at each dispensing stand are in storage position on their brackets **48**, as shown in Fig. 1, and the control lever **46** is in depressed position and the motor switch lever **42** is in open-switch position and the pilot-valve cam **21** is in the position shown in Fig. 6, with the pilot valve closed.

To initiate a dispensing operation from one of the stands, the nozzle **36** of that stand is lifted from its storage bracket **48**, and the control lever **46** is manually raised to operative position. The raising of this lever actuates the switch lever **42** to close the motor-controlling switch, which energizes the pump motor **13** and puts the pump into operation. Simultaneously, the raising of the lever **46** actuates the pilot valve cam **21** to lift the stem **94** and move the pilot valve to open position. In the operated stand, the opening of the pilot valve permits the pump pressure to be transmitted through the bypass inlet **82**, through the bypass chamber **70** and through the pilot valve **88** and the side passage **92** to the transfer passage **72** between the modulating valve **62** and the check valve **74**. Since the check valve **74** opens in the direction of flow, such pump pressure is also transmitted therethrough to the dispensing line of the stand, including the meter **24**, the pipes **28** and **32**, and the flexible hose **34**. The entire line through the operated stand is thus under pressure at least as great as the pump discharge pressure.

In each other stand of the system, the pump pressure is exerted on the closed pilot valve **88** and tends to maintain the pilot valve closed. It is likewise exerted in the bypass **70** against the upper end of the piston **68** and in the modulating valve chamber **60** against the upper face of the modulating valve **62**, to positively maintain the modulating valve in close position. In each non-operated stand, therefore, the pump pressure is stopped at the modulating valve mechanism, and is not transmitted to the dispensing line; and that dispensing line remains at the previously existing pressure, predetermined by previous operations and by the pressure responsive relief valve **98**.

The nozzle **36** of the operated stand is inserted in the container or tank of the customer, and the handle **38** is actuated manually to open the nozzle valve **37**, and delivery flow starts. The initial flow at the modulating valve mechanism will be from the by-pass chamber **70** and through the pilot valve, since the modulating valve will be closed, and this initial flow will be so limited that pressure reaction on the nozzle valve will be avoided and it will open smoothly. As the open nozzle valve **37** permits increased flow, the bypass chamber **70** will be drained through the pilot valve and the side passage **92** at a rate dependent on the degree of opening of the nozzle valve, which will tend to reduce the pressure in that by-pass chamber **70**. Meanwhile, gasoline under pump pressure will be entering the bypass chamber **70** at a rate dependent on the size of the restricted inlet **82**, tending to raise the pressure therein. Since the drain-opening through the pilot valve will be greater than the restricted inlet opening, an equilibrium condition will be established in which there is a pressure differential on opposite sides of the piston **68**, to lift the piston and open the modulating valve against the bias of the spring **66**. That pressure differential, and hence the degree of opening of the modulating valve will vary with the degree of opening of the nozzle valve **37**. The modulating valve, therefore, takes a position which depends upon the flow permitted through the nozzle valve **37**, and the modulating valve takes a more open position when the nozzle valve **37** is widely open and a more nearly closed position when the nozzle valve **37** is more nearly closed. The resulting effect of the modulating valve **68** will be to exert a modulation control on the flow of gasoline through the dispensing stand, and such modulation control will be responsive to the manual actuation of the nozzle valve **37**.

The modulating control is at the inlet to the dispensing stand, and protects the dispensing stand mechanism. It exerts little or no restriction on the delivery of gasoline through the dispensing stand and permits full flow when the nozzle valve **37** is fully opened. As the nozzle valve is partly closed, however, the modulating valve does impose a restriction which tends to reduce the pressure exerted in the dispensing line. The effect of the modulating valve is especially evident and important when the nozzle valve **37** is but slightly open, as during final slow delivery. As the nozzle valve is progressively closed, the modulating valve progressively closes, slightly in advance of the nozzle valve, until the modulating valve is fully closed and the only flow at that point is through the by-pass, at the rate permitted by its restricted inlet opening **82**. The resulting effect prevents any build up of pressure on the nozzle valve mechanism which might otherwise cause hammering and erratic and uneven action of the nozzle valve **37** during such final slow delivery.

The modulating action will be affected by the presence of the biased check-valve, especially to suppress pressure increasing surges in the line, for the check valve will have a damping effect, tending to convert any surge into an increased pressure in the transfer passage **72**. Any pressure rise which occurs in that transfer passage, whether from this cause or from a partial closing of the nozzle valve **37** or from any other cause, will be exerted through the side passage **92** and the pilot valve **88** to increase the pressure in the bypass chamber **70**, and will reduce the pressure differential on opposite sides of the modulating-valve piston **68**; and this will cause the modulating valve **62** to move toward closed position.

When the nozzle is finally closed at the termination of the delivery operation, the check valve **74** immediately

closes to prevent back flow of gasoline in the dispensing line. Normally, modulating valve **62** will already have closed to shut off flow of gasoline to the dispensing stand except through the bypass and the pilot valve.

The operator then replaces the nozzle **36** on its storage hanger **48**, and this operation depresses the control lever **46** to open the motor switch and stop the pump motor, and simultaneously moves the pilot valve cam **21** to the position shown in Fig. 6. This closes the pilot valve **88**, to shut off all flow to the dispensing stand and to convert the modulating valve mechanism to a check valve closing with pressure.

If during the dispensing operation at one stand as described above, another dispensing stand is put into operation, the actuation of its lever **46** closes its motor-control switch and opens its pilot valve **88**. The closing of its motor-controlling switch simply establishes an alternative circuit for the pump-motor, and when the switch of the first stand is opened, the motor remains energized through this alternative circuit until the second stand switch is opened. While the opening of the pilot valve of the second stand moves that valve against the pressure in the supply line, the valve is relatively small and is operated through the leverage of the cam **21**, and the operation is therefore an easy one requiring but little manual force on the lever **46**.

We find that the combination of our valve mechanism with remote dispensing apparatus is highly effective to eliminate difficulties otherwise encountered with such apparatus. Flow through the delivery line is controlled at two places, primarily at the manually operated nozzle valve **37** and secondarily at the modulating valve located in the entrance to the dispensing stand. Flow through the dispensing line of the stand and to nozzle valve is modulated by the modulating valve, and the nozzle valve works smoothly at any flow rate and hammer effects are avoided when the pilot valve is closed, pump pressure is positively cut off at the entrance to the stand, and the dispensing mechanism of the stand is protected from excess pressures and especially from repeated applications of pump pressure as other stands are operated. The starting of any stand, and especially the actuation of its control lever **46**, is easily done with little manual effort, whether or not the pump is already in operation by actuation from some other stand.

We claim as our invention:

1. In liquid-fuel dispensing apparatus for dispensing liquid fuel from a storage supply through a pressure line leading to a remote dispensing point and through a control valve at said point by which control of flow through said apparatus is primarily controlled, valve-mechanism in said pressure line ahead of said control valve, comprising a modulating valve, a by-pass around said modulating valve and having restricted communication with said pressure line upstream of said modulating valve, and means controlling the position of said modulating valve in response to the pressure differential between said by-pass and said pressure line upstream of said modulating valve.

2. In liquid-fuel dispensing apparatus for dispensing liquid fuel from a storage supply through a pressure line leading to a remote dispensing point and through a control valve at said point by which control of flow through said apparatus is primarily controlled, valve-mechanism in said pressure line ahead of said control valve, comprising a modulating valve, a by-pass around said modulating valve and having restricted communication with said pressure line upstream of said modulating valve, means controlling the position of said modulating valve in response to the pressure differential between said by-pass and said pressure line upstream of said modulating valve, and a pilot valve controlling the outlet of said by-pass.

3. In liquid-fuel dispensing apparatus for dispensing liquid fuel from a storage supply through a pressure line leading to a remote dispensing point and through a control valve at said point by which control of flow through said apparatus is primarily controlled, valve-mechanism in said pressure line ahead of said control valve, comprising a modulating valve, a by-pass around said modulating valve and having restricted communication with said pressure line upstream of said modulating valve, means controlling the position of said modulating valve in response to the pressure differential between said by-pass and said pressure line upstream of said modulating valve, and a check-valve in said pressure line downstream from said modulating valve, the outlet from said by-pass opening to said line between said two valves.

4. In liquid-fuel dispensing apparatus for dispensing liquid fuel from a storage supply through a pressure line leading to a remote dispensing point and through a control valve at said point by which control of flow through said apparatus is primarily controlled, valve-mechanism in said pressure line ahead of said control valve, comprising a modulating valve closing in the direction of flow and biased to closed position, a by-pass around said modulating valve and having restricted communication with said pressure line upstream of said modulating valve, and means to open said modulating valve in response to a pressure differential between said by-pass and said pressure line upstream of said modulating valve.

5. A dispensing stand for connection to a pressure line which supplies liquid fuel under pressure, comprising a dispensing line including a meter and a dispensing hose terminating in a nozzle containing a manual primary-control valve, a modulating valve and a check-valve in series at the inlet end of said dispensing line, and means for controlling the position of said modulating valve in accordance with pressure drop from a point ahead of said modulating valve to a point between said modulating valve and said check valve, said check valve being arranged to close against flow pressure and being biased to closed position.

6. A dispensing stand for connection to a pressure line which supplies liquid fuel under pressure, comprising a dispensing line including a meter and a dispensing hose terminating in a nozzle containing a manual primary-control valve, a modulating valve and a check-valve in series at the inlet end of said dispensing line, means for controlling the opening of said modulating valve in accordance with pressure drop from a point ahead of said modulating valve to a point between it and said check-valve, and a pressure-relief valve opening from the dispensing line beyond said check valve for relieving excess pressure therein to the connected pressure line.

7. A dispensing stand for connection to a pressure line which supplies liquid fuel under pressure, comprising a dispensing line including a meter and a dispensing hose terminating in a nozzle containing a manual primary-control valve, a modulating valve at the inlet end of said dispensing line, said modulating valve being a normally-closed valve closing with pressure in the direction of flow, means for opening said modulating valve in accordance with pressure-drop across said modulating valve, and manually-operable means normally effective to render said valve-controlling means inoperative to open said valve.

8. A dispensing stand for connection to a pressure line which supplies liquid fuel under pressure, comprising a dispensing line including a meter and a dispensing hose terminating in a nozzle containing a manual primary-control valve, a modulating valve at the inlet end of said dispensing line, a by-pass around said modulating valve and having a restricted intake opening at the upstream side of said modulating valve, and means to control the position of said modulating valve in accordance with the pressure drop across said by-pass.

9. A dispensing stand for connection to a pressure line which supplies liquid fuel under pressure, comprising a dispensing line including a meter and a dispensing hose terminating in a nozzle containing a manual primary-

control valve, a modulating valve at the inlet end of said dispensing line, said modulating valve being a normally-closed valve closing with pressure in the direction of flow, a by-pass around said valve and having a restricted intake opening at the upstream side of said valve, means to open said valve in response to a pressure drop across said by-pass and to control the position thereof in accordance with variations in said pressure drop, a pilot valve normally closing the discharge end of said by-pass to prevent pressure-drop across said by-pass, whereby to cause said modulating valve to act as a check-valve, and means to open said pilot valve.

10. Liquid fuel dispensing apparatus, comprising a dispensing stand having a dispensing line terminating in a primary-control valve, a remote supply pump connected to said stand, means for driving said pump, a modulating and shut-off valve in said dispensing stand and biased to closed position, a by-pass about said valve, means responsive to pressure drop across said by-pass for opening said valve to modulating position, a pilot valve for closing said by-pass to prevent pressure drop thereacross, a switch at said stand for controlling said driving means, and manually operable means at said stand jointly controlling said switch and pilot valve.

References Cited in the file of this patent

UNITED STATES PATENTS

857,896	Parks	June 25, 1907
938,683	Millice	Nov. 2, 1909
1,005,117	Judell	Oct. 3, 1911
1,191,963	Gustafson	July 25, 1916
1,876,784	Stedwell	Sept. 13, 1932
2,276,839	Grise	Mar. 17, 1942
2,361,684	Grise	Oct. 31, 1944
2,553,888	Barnes	May 22, 1951
2,582,259	Koplin et al.	Jan. 15, 1952