(12) INTERNATIONAL APPLICATION PUBLISHED UNDER THE PATENT COOPERATION TREATY (PCT)

(19) World Intellectual Property Organization
International Bureau

(43) International Publication Date
6 November 2014 (06.11.2014)

WIPO | PCT

(10) International Publication Number
WO 2014/176701 A1

(51) International Patent Classification:
E04C 5/16 (2006.01) *F16B 1/00* (2006.01)
B65D 88/12 (2006.01) *F16B 9/02* (2006.01)
B65D 90/02 (2006.01) *B60P 1/64* (2006.01)
E04B 1/35 (2006.01)

(21) International Application Number:
PCT/CA2014/050420

(22) International Filing Date:
2 May 2014 (02.05.2014)

(25) Filing Language: English

(26) Publication Language: English

(30) Priority Data:
13/887,105 3 May 2013 (03.05.2013) US

(72) Inventor; and
(71) Applicant : **PRODANIUK, Gary** [CA/CA]; 21505 TWP 572, P.O. Box 67, Redwater, Alberta T0A 2W0 (CA).

(74) Agent: **OKIMAW, Richard**; 303 - 1630 Pandosy Street, Kelowna, British Columbia V1Y 1P7 (CA).

(81) Designated States *(unless otherwise indicated, for every kind of national protection available)*: AE, AG, AL, AM, AO, AT, AU, AZ, BA, BB, BG, BH, BN, BR, BW, BY, BZ, CA, CH, CL, CN, CO, CR, CU, CZ, DE, DK, DM, DO, DZ, EC, EE, EG, ES, FI, GB, GD, GE, GH, GM, GT, HN, HR, HU, ID, IL, IN, IR, IS, JP, KE, KG, KN, KP, KR, KZ, LA, LC, LK, LR, LS, LT, LU, LY, MA, MD, ME, MG, MK, MN, MW, MX, MY, MZ, NA, NG, NI, NO, NZ, OM, PA, PE, PG, PH, PL, PT, QA, RO, RS, RU, RW, SA, SC, SD, SE, SG, SK, SL, SM, ST, SV, SY, TH, TJ, TM, TN, TR, TT, TZ, UA, UG, US, UZ, VC, VN, ZA, ZM, ZW.

(84) Designated States *(unless otherwise indicated, for every kind of regional protection available)*: ARIPO (BW, GH, GM, KE, LR, LS, MW, MZ, NA, RW, SD, SL, SZ, TZ, UG, ZM, ZW), Eurasian (AM, AZ, BY, KG, KZ, RU, TJ, TM), European (AL, AT, BE, BG, CH, CY, CZ, DE, DK, EE, ES, FI, FR, GB, GR, HR, HU, IE, IS, IT, LT, LU, LV, MC, MK, MT, NL, NO, PL, PT, RO, RS, SE, SI, SK, SM, TR), OAPI (BF, BJ, CF, CG, CI, CM, GA, GN, GQ, GW, KM, ML, MR, NE, SN, TD, TG).

Declarations under Rule 4.17:

— *as to the identity of the inventor (Rule 4.17(i))*

— *as to applicant's entitlement to apply for and be granted a patent (Rule 4.17(ii))*

— *as to the applicant's entitlement to claim the priority of the earlier application (Rule 4.17(iii))*

[Continued on next page]

(54) Title: APPARATUS AND SYSTEM FOR FORMING A STRUCTURE

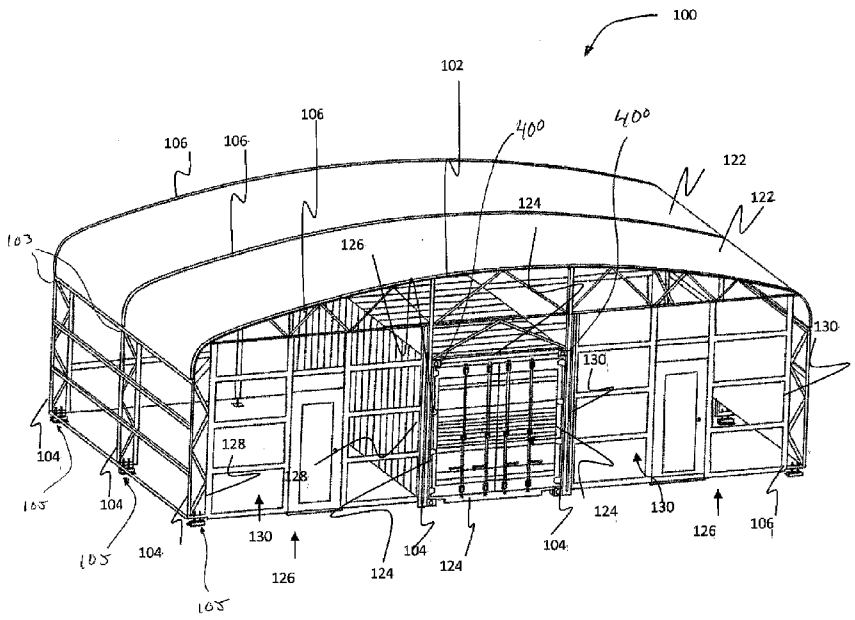

Fig. 1

(57) Abstract: A system for forming a structure around a shipping container, the system includes a plurality of uprights positioned on the ground at a distance from the side of said shipping container. The system also includes a plurality of trusses. Each truss is having top and bottom members extending between proximate and distal ends. The proximate end of each of said top and bottom members having a bore therethrough engageable by a pin connection supported by said shipping container. The said distal ends of said top and bottom members is being engageable with and supported by one of said uprights.

WO 2014/176701 A1

Published:

— *with international search report (Art. 21(3))*

APPARATUS AND SYSTEM FOR FORMING A STRUCTURE

BACKGROUND OF THE INVENTION

1. Field of Invention

The present invention relates to a frame structure for securely covering a container. In particular, the invention relates to a frame structure to create a building around a shipping container using a plurality of truss along with other supporting structures and coupling units.

2. Description of Related Art

Containers are commonly used for transporting materials from one location to another as cargo. These containers are commonly transported in ships and aircrafts. Once the materials or cargo are removed from a container at shore they may be used only once. Commonly such containers may be utilized as for storage at a location after or in replace of such transportation usage. Such storage containers provide secure and easily transportable storage. In other uses, some storage containers may be utilized as temporary or portable offices or facilities.

One disadvantage of such utilizing such storage containers is that they include a limited amount of space therein. Conventionally, if a user wishes to provide a greater amount of space, they must purchase and transport a greater quantity of containers or purchase a separate independent structure, such as a tent or the like. Disadvantageously, such additional structures will not commonly be sized to locate or integrate the container thereinto thereby creating a less efficient and less visually pleasing overall location.

SUMMARY OF THE INVENTION

The present invention discloses a system for forming a structure around a shipping container. The system includes a plurality of uprights positioned on the ground at a distance from the side of the shipping container. The system also includes a plurality of trusses. Each truss is having top and bottom members extending between proximate and distal ends. The proximate end

of each of the top and bottom members have a bore therethrough engageable by a pin connection supported by the shipping container. The distal ends of the top and bottom members are engageable with and supported by one of the uprights.

The system may use multiple types of coupling units for holding the trusses on to top of the shipping container. The coupling units may be attached to the shipping container. The coupling units hold the portion of a top truss which is part of truss.

A coupling unit for securing a structural member to a shipping container includes a base plate, a number of flanges extending outwardly from the base plate to form at least one locking track, wherein the at least one locking track is capable of receiving the structural member. The coupling unit also has at least one locking member configured to engage with a lock receiver on an exterior surface of the shipping container.

The locking member includes an elongate screw member extending between top and bottom ends, the screw member being threadably passed through the base plate and a locking block fixedly connected to the bottom end of the screw member, the locking block being engageable within the lock receiver and selectably rotatable between engaged and disengaged positions therein. The locking member also includes a handle protruding from the top end of the screw member, wherein the handle is capable of being rotated to turn the screw member and the locking block into the engaged and disengaged positions. The locking member further includes at least one nut member threadably located around the screw member between the handle and the base plate being operable to rotatable lock of the screw member. The base plate of the coupling unit has an L-shaped cross-section.

Other aspects and features of the present invention will become apparent to those ordinarily skilled in the art upon review of the following description of

specific embodiments of the invention in conjunction with the accompanying Figures.

BRIEF DESCRIPTION OF THE DRAWINGS

In drawings which illustrate embodiments of the invention wherein similar characters of reference denote corresponding parts in each view,

Figure **1** is a perspective view of a system for forming a structure around a shipping container in accordance with a first embodiment of the present invention.

Figure **2**A is a perspective view of a truss for forming the system of Figure **1**.

Figure **2**B is an exploded perspective view of a truss for forming the system of Figure **1**.

Figure **3** is a detailed exploded perspective view of the brackets interconnecting the top and end trusses for forming the truss of Figure **2**.

Figure **4** is a cross sectional view of the upper truss member as taken along the line **4**-**4**.

Figure **5** is a perspective view of a coupling unit for connection to a container according to a further embodiment of the present invention.

Figure **6** is a cross-sectional view of the coupling unit of Figure **6** as taken along the line **6**-**6**.

Figure **7**A is a cross-sectional view of the coupling unit of Figure **6** as taken along the line **7**-**7** at a disengaged orientation.

Figure **7**B is a cross-sectional view of the coupling unit of Figure **6** as taken along the line **7**-**7** at an engaged orientation.

Figure **8** is a perspective view of a coupling unit for location along a side of the shipping container according to a further embodiment of the present invention.

Figure **9** is a perspective view of a coupling unit located along a bottom corner of the shipping container according to a further embodiment of the present invention.

Figure **10** is a perspective view of a coupling unit located along a top corner of a shipping container with a truss located thereon and supported thereby.

Figure **11** is a perspective view of the system of Figure **1** at an intermediate stage of assembly.

DETAILED DESCRIPTION

Referring to Figure **1**, a system for forming a structure around a shipping container **102** according to a first embodiment of the invention is shown generally at **100**. The system **100** includes a plurality of uprights **104** positioned on the ground at a distance from the side of the shipping container **102**. The system **100** also includes a plurality of trusses **106** extending over and secured to the top of the shipping container **102** and the uprights **104**. As illustrated in Figure **1**, the system forms an enlarged structure around the shipping container so as to form additional enclosures adjacent to each side thereof. The plurality of trusses **106** are connected to the shipping container **102** by means of coupling units **400**.

With reference to Figures **2**A and **2**B, a perspective and exploded view of a truss **106** is illustrated. Each truss has a top **108** and bottom **110** edges extending between proximate **112** and distal **114** ends. Each truss **106** is formed of a center truss member **120** and a pair of end truss members **118** connected lengthwise thereto. The end truss members **118** are formed of top **107** and bottom **109** members extending between the proximate and distal ends **112** and **114** respectively with a plurality of cross braces **125** extending therebetween to form a space frame. The center truss member **120** is formed of a top member **121** and a bottom member **123** with a plurality of cross braces **125** extending therebetween to form a space frame. Each bottom member **123** of the center truss includes at least one bore **127** for passing a fastener (not shown in Figures **2**A and **2**B) for securing the top truss **120** to the top of the shipping container **102**. The proximate ends **112** of each end truss member **118** are connected to the center truss member **120** proximate to the top and bottom edges **108** and **110** to align the top members **107** and

121 of the end and center truss members **118** and **120**. In particular, the proximate ends **112** of each end truss member **118** are secured to the center truss member **120** by a bracket system **116** as will be more fully described below.

With reference to Figure **3**, a detailed perspective view of the bracket system **116** is illustrated. The bracket system **116** comprises a pair of top bracket plates **140** extending from the top truss member **120** with a space therebetween. Each top bracket plate **140** includes a bore **142** therethrough sized to receive a fastener **144**, such as, by way of non-limiting example, a pin, bolt or the like. The top member **107** of each end truss member **118** includes a top bore **148** corresponding to the bores **142** in the top bracket plates **142** so as to receive the fastener **146** therethrough. The bracket system **116** also comprises a pair of middle bracket plates **150** extending from the center truss member **120** with a space therebetween. Each middle bracket plate **150** includes a bore **152** therethrough sized to receive a fastener **154**, such as, by way of non-limiting example, a pin, bolt or the like. The bottom member **109** of each end truss member **118** includes a bottom bore **156** corresponding to the bores **152** in the middle bracket plates **150** so as to receive the fastener **154** therethrough. It will be appreciated that the middle bracket plates **150** will be located at a position corresponding to the bottom member **109** of the end truss member **118**. Furthermore, as illustrated in Figure **3**, the bracket system **116** may optionally include a pair of bottom bracket plates **160** extending from the center truss member **120** with a space therebetween at a position below the middle bracket plates **150**. Each bottom bracket plate **160** includes a bore **162** therethrough sized to receive a fastener (not shown), such as, by way of non-limiting example, a pin, bolt or the like. The bottom bracket plates **160** may be utilized to secure a side wall **130** therein as illustrated in Figure **1**. Each of the top bracket plates **140**, middle bracket plates **150** and bottom bracket plates are spaced apart by a distance corresponding to the width of the end truss member **118** or side wall **130** so as to receive the end truss or side wall **130** therebetween.

Turning now to Figure **3**, the top members **107** and **121** of the end truss and center truss members **120** each includes a track member **170** located thereon. The track member **170** comprises an elongate member which may be secured to the top member **107** by fasteners **172**, such as bolts, rivets or the like by way of non-limiting example. The track member extends between first and second side edges, **174** and **176**, respectively wherein each side edge includes a channel **178** running therealong having an opening **180** to an exterior of the track member. The channel **178** may be substantially circular as illustrated in Figure **4**, or any other cross-sectional shape as desired by a user. The channels **178** are selected to have a size sufficient to receive a beaded edge **182** of a fabric sheet **184** therein. By way of non-limiting example, such fabric sheets are commonly known, such as Keder Cord manufactured by Keder Solutions of Oak Creek Wisconsin. The channel **178** provides a path of travel for the beaded edge **182** and permits the sheet to be pulled over the assembled structure between adjacent trusses as will be further described below so as to form a covered roof over the shipping container.

As illustrated in Figure **1**, the system **100** includes a plurality of uprights **104** positioned in a vertical orientation on the ground. Each upright **104** is positioned at sides of the shipping container **102** distally therefrom so as to support the distal ends **114** of the end truss members **118**. The uprights **104** may be connected or firmly fixed to the ground using ground stakes or the like or may optionally be supported by a foot or ground plate as are commonly. The uprights **104** are further bolted, pin or otherwise fastened to the distal ends **114** of the end truss members **118** according to known methods. The uprights **104** may further be formed of a solid member, such as a post or the like or may optionally be formed as a space frame member as illustrated in Figure **1**.

Turning now to Figures **5** and **6**, a coupling unit **400** for securing one of the top trusses to a shipping container comprises of a base plate **402** and a first and second bracket plates, **404** and **405**, respectively extending substantially

perpendicularly therefrom. The first and second bracket plates form a cavity **406** therebetween sized to receive a structural member, such as, by way of non-limiting example, a center truss member **120** or side wall **130**. The first and second bracket plates **404** and **405** are provided with a plurality of apertures **407** extending therethrough to fasten the coupling units **400** located between the first and second bracket plates **404** and **405** by the use of bolts, pins or other suitable fasteners. The coupling unit **400** also has a locking member **408** configured to engage with a lock receiver **98** as are commonly known on an exterior surface of the shipping container **102**. As illustrated in Figure **5**, the lock receiver **98** may commonly be oval shaped with long and short directions **96** and **94**, respectively such as is commonly known as a corner casting for an intermodal container. The locking member **408** comprises an elongate screw member **410** extending between top and bottom ends, the screw member is threadably passed through the base plate **402**. Optionally, the base plate may include a threaded raised collar **403** surrounding the screw member **410**. The locking member **408** also has locking block **412** fixedly connected to the bottom end of the screw member **410**. The locking bloc **412** has a size selected to be passed through the lock receiver **98** in a first or disengaged orientation as illustrated in Figure **7**A and retained therein when rotated **90** degrees to a locked orientation as illustrated in Figure **7**B. The locking block will have a size selected to have a length greater than the short direction **94** and less than the long direction **96** of the lock receiver **98** and a with less than the short direction **94** of the lock receiver **98**. By way of non-limiting example, it has been found that a width of up to 2 inches (51 mm) and a length of between 2.5 and 4 inches (64 and 102 mm) although it will be appreciated that these dimensions may be varied depending upon the lock receiver size used.

The locking member **408** also includes a handle **414** protruding from the top end of the screw member **410**. The handle **414** is capable of being rotated by a user to turn the screw member **410** and the locking block **412** into the engaged and disengaged position. The locking member **408** also has at least one nut **416** threadably located around the screw member **410** between the

handle **414** and the base plate **402** being operable to rotatable lock the screw member **410** and may optionally include a lock washer **420** as are commonly known between the nut **416** and the base plate **402**. As illustrated in Figure **5**, the coupling unit **400** may have a L-shaped profile formed by a side plate **418** extending from the base plate **402** so as to position the coupling unit **400** at an edge of the shipping container **102**. As illustrated in Figure **5**, the coupling unit **400** may be adapted to be located in one of the top corners of the shipping container **102**, however the coupling unit **400** may also be adapted to be located at a top middle portion of the shipping container as illustrated in Figure **8**, or a bottom corner of the shipping container as illustrated in Figure **9**.

With reference to Figures **7**A and **7**B, the locking block **412** may be passed through a lock receiver **98** in a shipping container with the locking block **412** in the disengaged orientation as illustrated in Figure **7**B. As illustrated the coupling unit **400** may optionally include raised guides **422** extending from the bottom surface of the base plate **402** which are sized to closely center the locking member **408** within the lock receiver. Once the locking block **412** is located within the lock receiver **98**, the handle **414** may be turned by a user so as to rotate the locking block **412** approximately **90** degrees to the engaged position as illustrated in Figure **7**B. In such an orientation, the length of the locking block **412** will extend across the short direction of the lock receiver **98** thereby retaining the locking block **412** therein. Thereafter, the nut **416** may be turned in a downward direction to engage either directly upon the base plate **402** or to engage the lock washer **420** therebetween and thereby to fix the rotation of the screw member **410** from further rotation.

With reference to Figure **10**, in order to set up the system **100**, the coupling units **400** are secured within the lock receivers **98** as set out above with the first and second bracket plates **404** and **405** aligned with each other on opposed sides of the shipping container. Thereafter, the top trusses **120** may be located with the bottom member **123** between the first and second bracket plates **404** and **405** within the cavity **406** and secured thereto with fasteners

440 passed through the fastener bores **127** in the bottom member and the apertures **407** in the first and second bracket plates.

With reference to Figure **11**, each center truss member **120** may thereafter have the end trusses connected thereto by locating the bottom member **109** of the end truss between the middle bracket plates **150** and thereafter passing a fastener **154** through the bores **152** in the middle bracket plates **150** and the bore **156** in the end brackets as illustrated in Figure **3**. Thereafter end truss members **118** may be rotated in an upward direction, generally indicated at **442** and the top member **107** of the end truss member **118** secured between the top bracket plates **140** in a similar manner. Thereafter, the uprights **104** may be secured under the distal ends **114** of the end truss member **118** by any commonly known method, such as fasteners or the like. The roof to the structure is provide by drawing the fabric sheet **184** in a direction generally indicated at **444** with the bead edges **182** located within the channels **178**. Furthermore, side walls **130** may be secured under the trusses **106** and to coupling units **400** on the shipping container in a similar fashion as illustrated in Figure **1**. It will also be appreciated that side walls may be applied between the uprights **104** to end close the structure according to known methods.

The system **100** provides additional space around the shipping container **102** depending up on the size of the trusses being used. These additional spaces may be used for storing other objects in addition to the shipping container **102**. Using multiple frame structures a huge building for storing multiple containers may also be created.

While specific embodiments of the invention have been described and illustrated, such embodiments should be considered illustrative of the invention only and not as limiting the invention as construed in accordance with the accompanying claims.

What is claimed is:

1. A coupling unit for securing a structural member to a shipping container, the coupling unit comprising:

a base plate;

a plurality of flanges extending outwardly from said base plate to form at least one locking track, wherein said at least one locking track is capable of receiving said structural member; and

at least one locking member configured to engage with a lock receiver on an exterior surface of said shipping container.

2. The coupling unit as claimed in claim **1**, wherein said locking member comprises:

an elongate screw member extending between top and bottom ends, said screw member being threadably passed through said base plate;

a locking block fixedly connected to said bottom end of said screw member, said locking block being engageable within said lock receiver and selectably rotatable between engaged and disengaged positions therein;

a handle protruding from said top end of said screw member, wherein said handle is capable of being rotated to turn said screw member and said locking block into said engaged and disengaged positions; and

at least one nut member threadably located around said screw member between said handle and said base plate being operable to rotatable lock of said screw member.

3. The coupling unit as claimed in claim **1**, wherein the base plate has an L-shaped cross-section.

4. A system for forming a structure around a shipping container, the system comprising:

a plurality of uprights positioned on the ground at a distance from the side of said shipping container; and

a plurality of trusses, each truss having top and bottom members extending between proximate and distal ends, said proximate end of each of said top and bottom members having a bore therethrough engageable by a pin connection supported by said shipping container, said distal ends of said top and bottom members being engageable with and supported by one of said uprights.

5. The system of claim **4**, further comprising a plurality of covering frames positioned proximal to an end boundary of the shipping container, wherein each covering frame is coupled to said upright at an end.

6. The system of claim **4**, further comprising a plurality of side covering members connected to said plurality of covering frames to form a side covering.

7. The system of claim **4**, further comprising at least one upper covering member connected to said plurality of trusses to form an upper covering for said shipping container.

8. The system of claim **7** wherein said at least one upper covering member is slidably supported by said top members of said trusses.

9. The system of claim **8** wherein said upper covering member includes at least one flexible elongate bead extending therealong receivable within a track formed in said top members of said trusses.

10. The system of claim **9** further comprising a top truss securable to a top of said shipping container, said top truss having a top member with a track therethrough.

11. The system of claim **10** wherein said top truss includes top and bottom brackets at each side thereof operable to hingedly support said bores of an endwise connected truss.

12. The system of claim **11** wherein said brackets comprise a pair of plates spaced apart by a distance corresponding to a width of said truss and having a bore therethrough corresponding to said bore of said truss.

13. The system of claim **10** wherein the track of corresponding trusses and top trusses are continuous with each other to pass a common elongate bead of a upper covering member therethrough.

14. The system of claim **10**, further comprising a plurality of coupling units for coupling said top truss to at least one top end of said shipping container.

15. The system of claim **14** wherein each coupling unit comprises:

a base plate;

a plurality of flanges extending outwardly from said base plate to form at least one locking track, wherein said at least one locking track is capable of receiving said top truss; and

at least one locking member configured to engage with a lock receiver on an exterior surface of said shipping container.

16. The system of claim **15** wherein said locking member comprises:

an elongate screw member extending between top and bottom ends, said screw member being threadably passed through said base plate;

a locking block fixedly connected to said bottom end of said screw member, said locking block being engageable within said lock receiver and selectably rotatable between engaged and disengaged positions therein;

a handle protruding from said top end of said screw member, wherein said handle is capable of being rotated to turn said screw member and said locking block into said engaged and disengaged positions; and

at least one nut member threadably located around said screw member between said handle and said base plate being operable to rotatable lock said screw member.

17. The system of claim **15** wherein said base plate has an L-shaped cross-section.

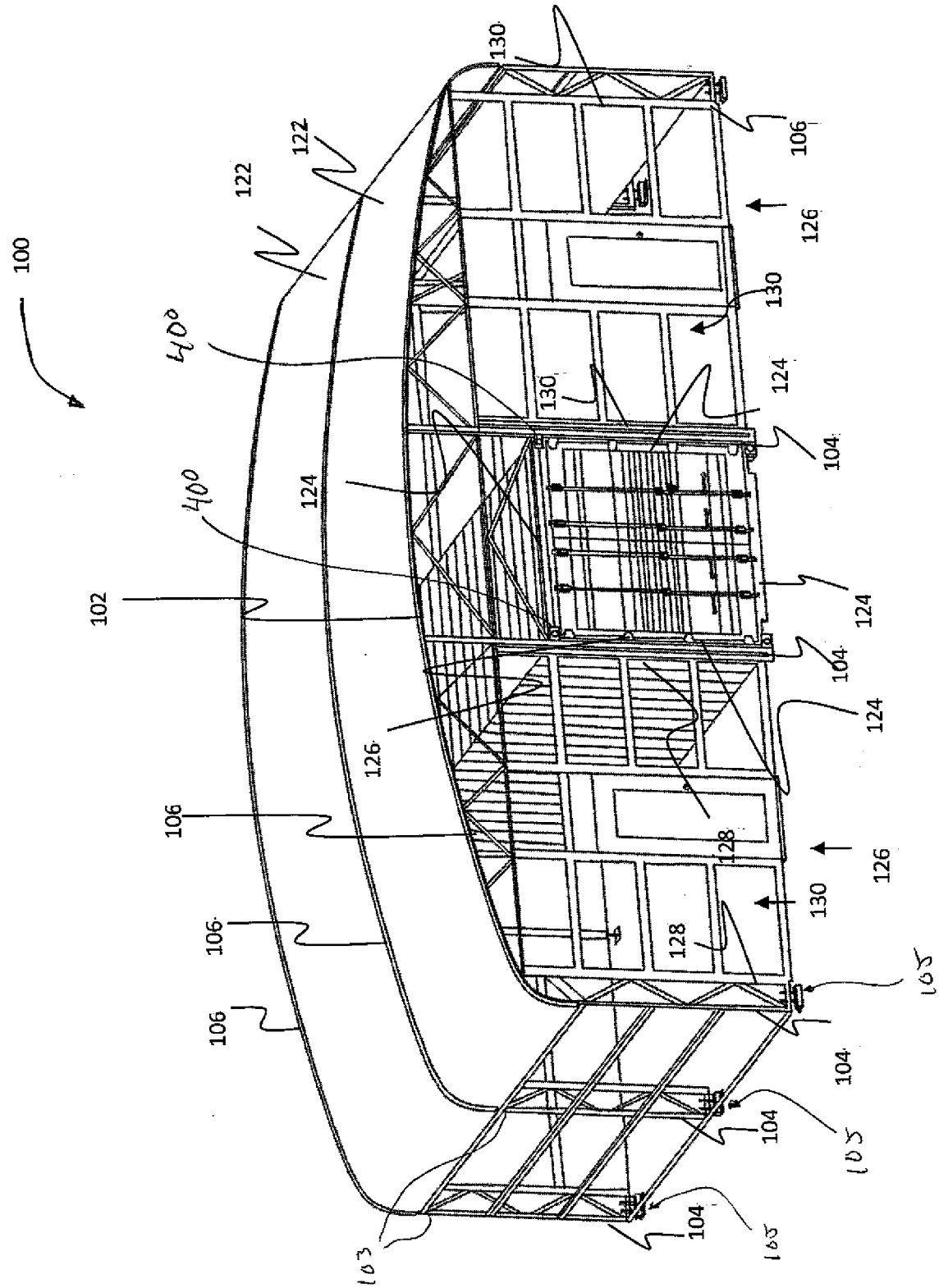

Fig. 1

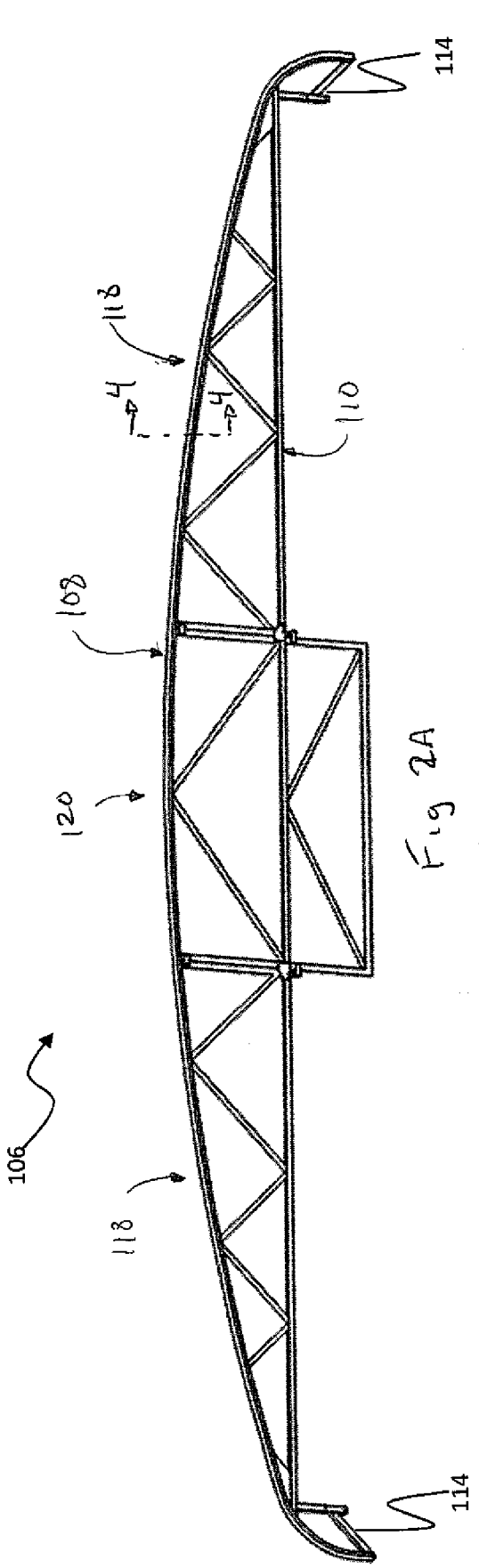
114
118
4
4
110
108
120
106
118
114

Fig 2A

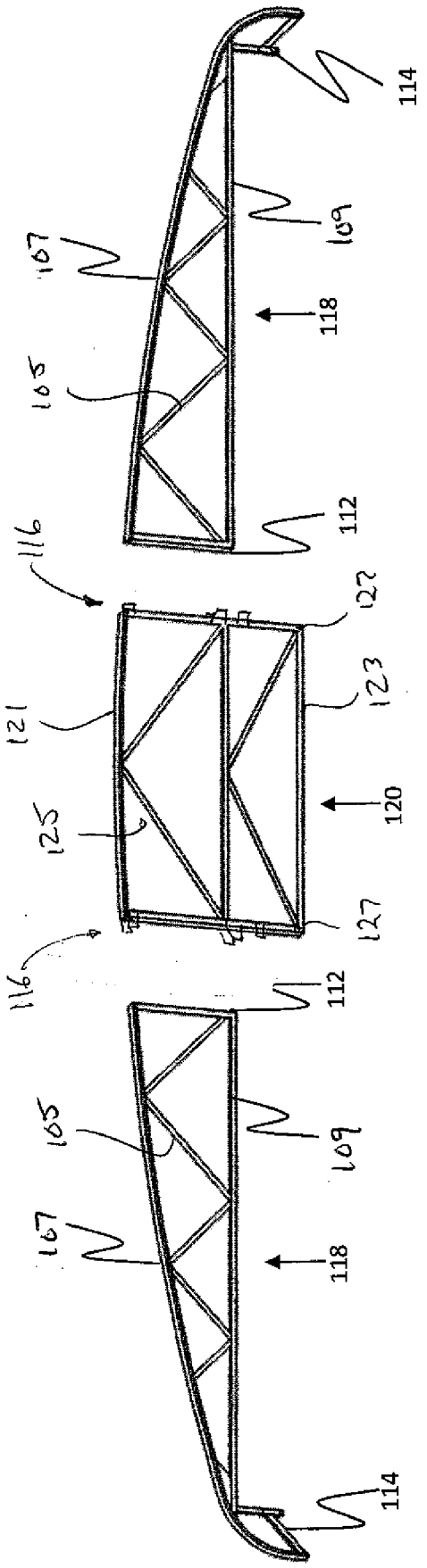
114
107
109
118
105
112
116
122
121
123
125
120
127
116
112
105
109
107
118
114

Fig. 2B

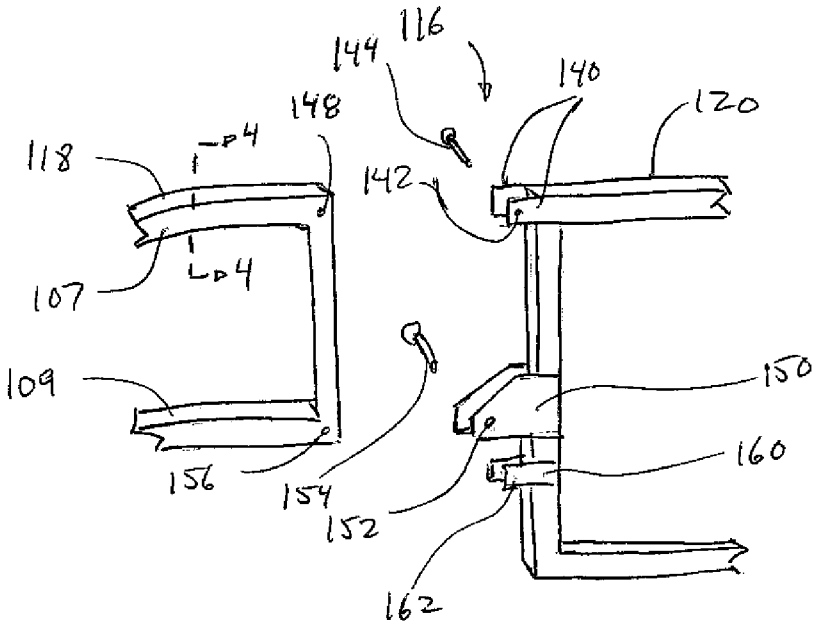
116
144
140
120
148
118
142
107
109
150
160
156
154
152
162

Fig. 3

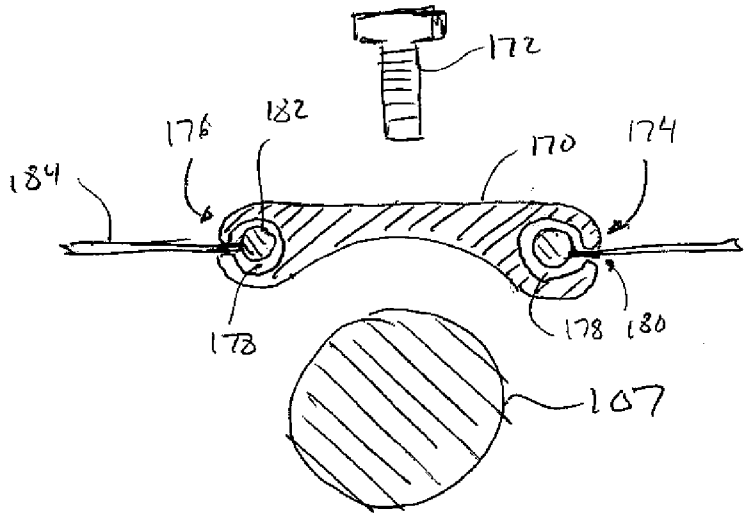
172
176
182
170
174
184
178
178
180
107

Fig. 4

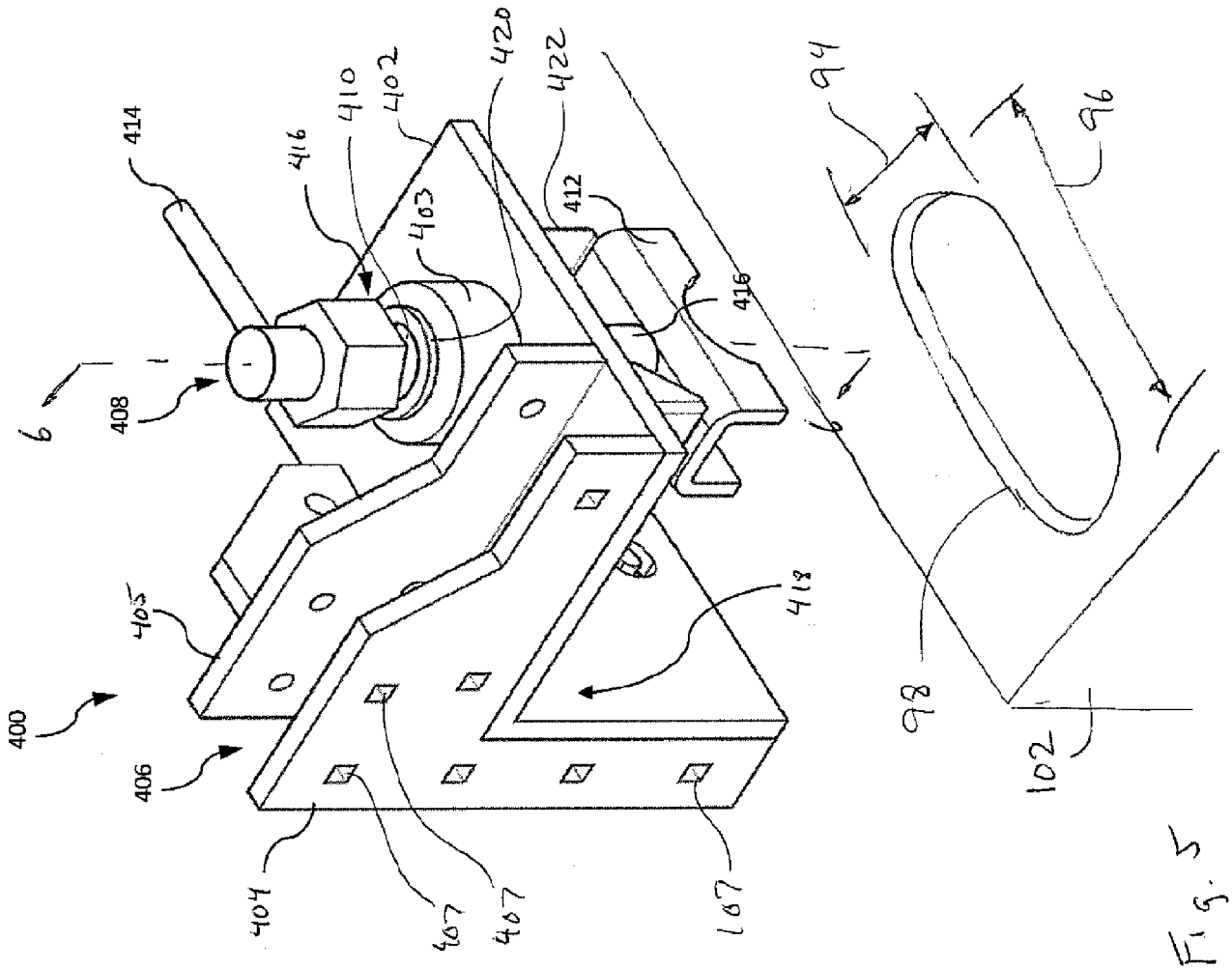
400
402
403
404
405
406
407
407
408
410
412
414
416
416
418
420
422
6
6
94
96
98
102

Fig. 5

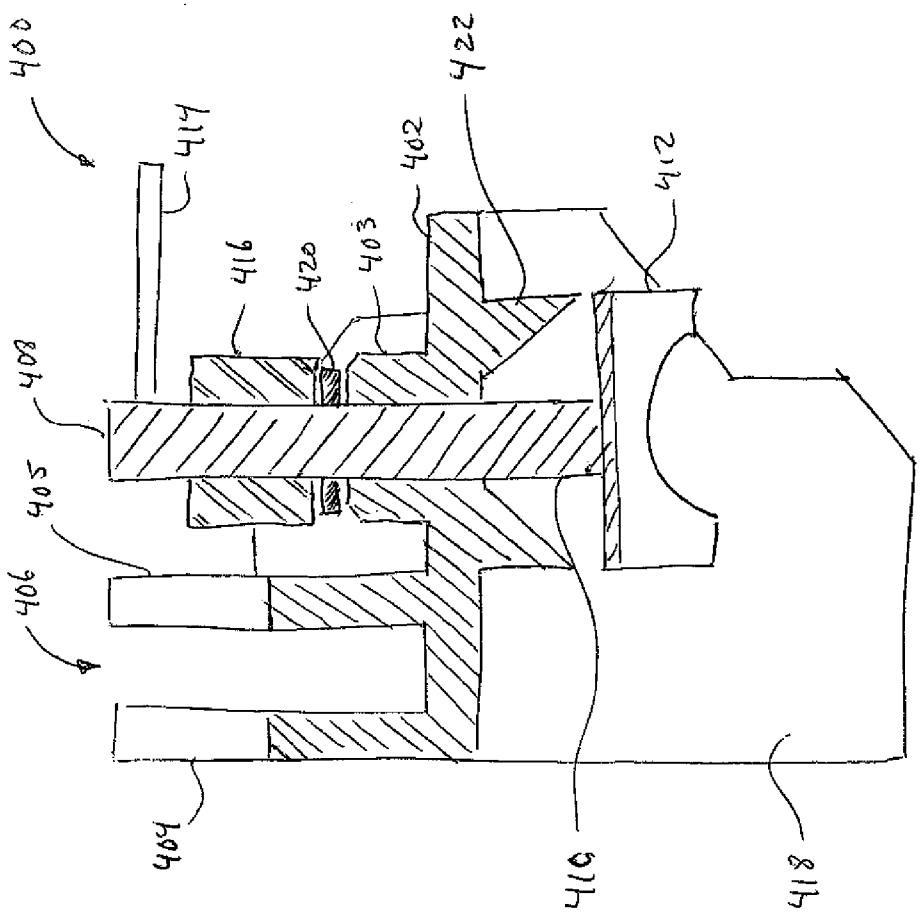

Fig. 4

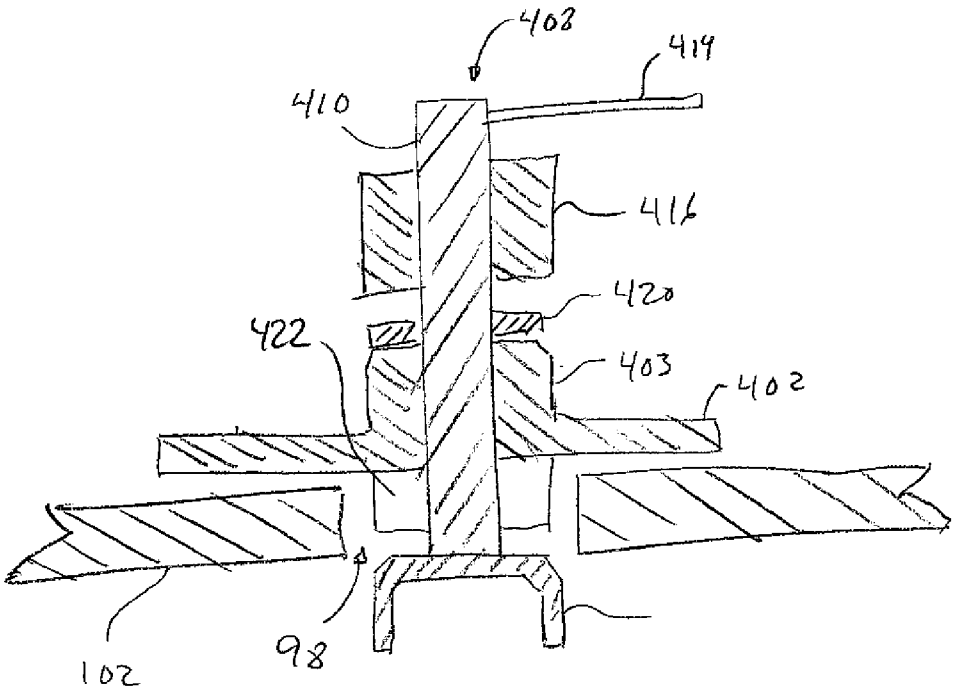
408
414
410
416
420
422
403
402
102
98

Fig. 7A

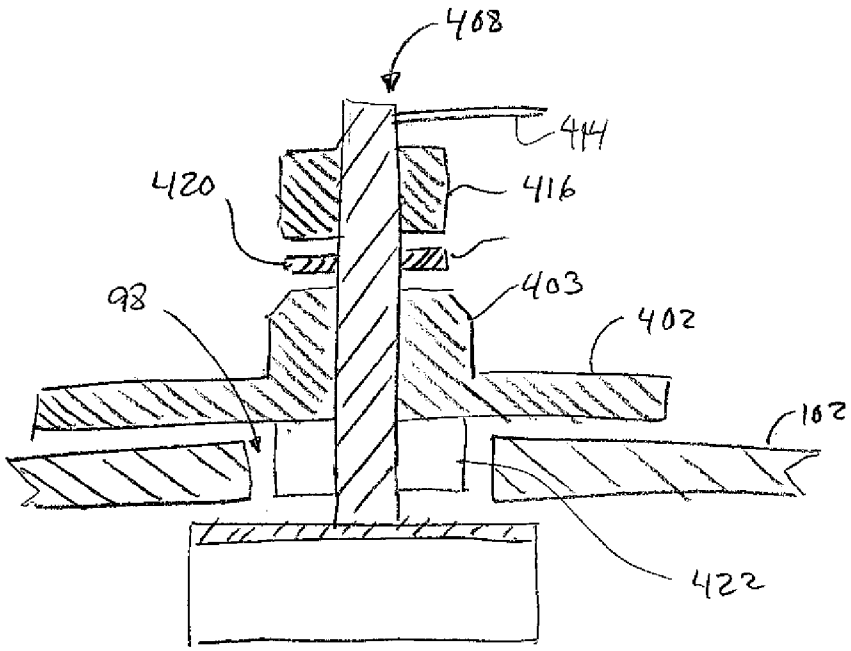
408
414
420
416
403
98
402
102
422

Fig. 7B

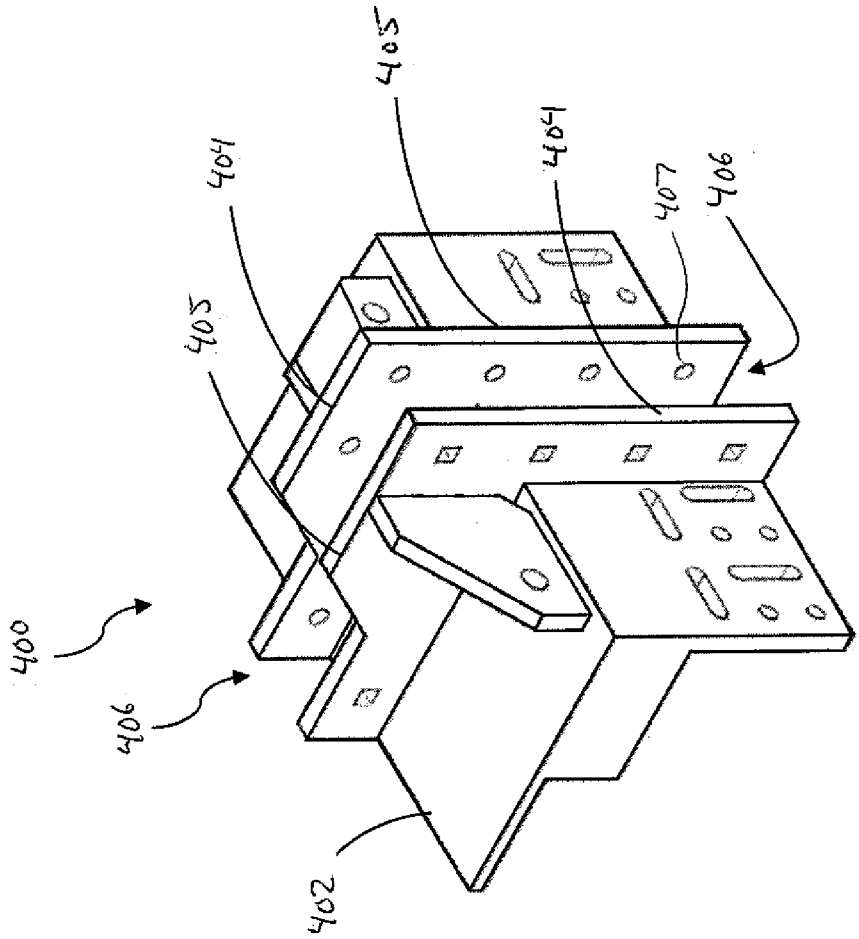

Fig. 8

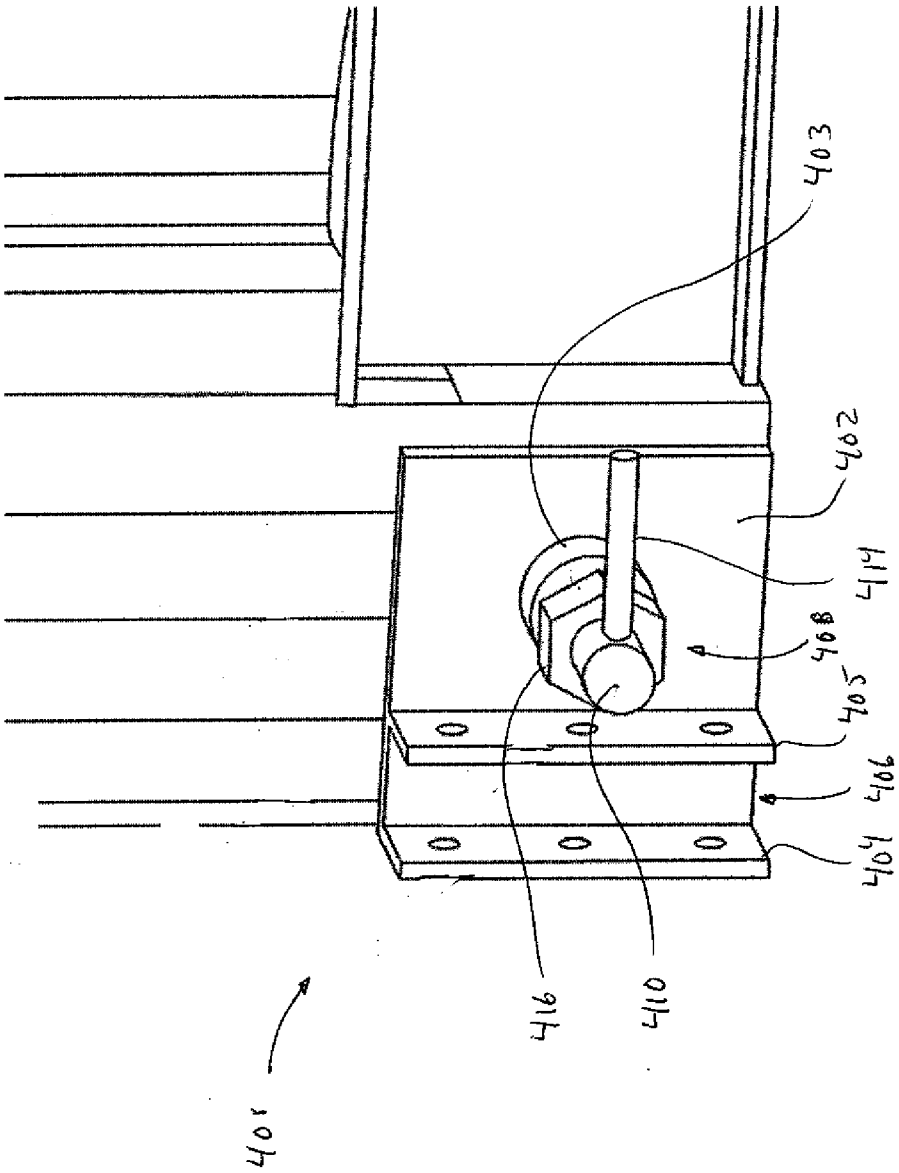

Fig. 9

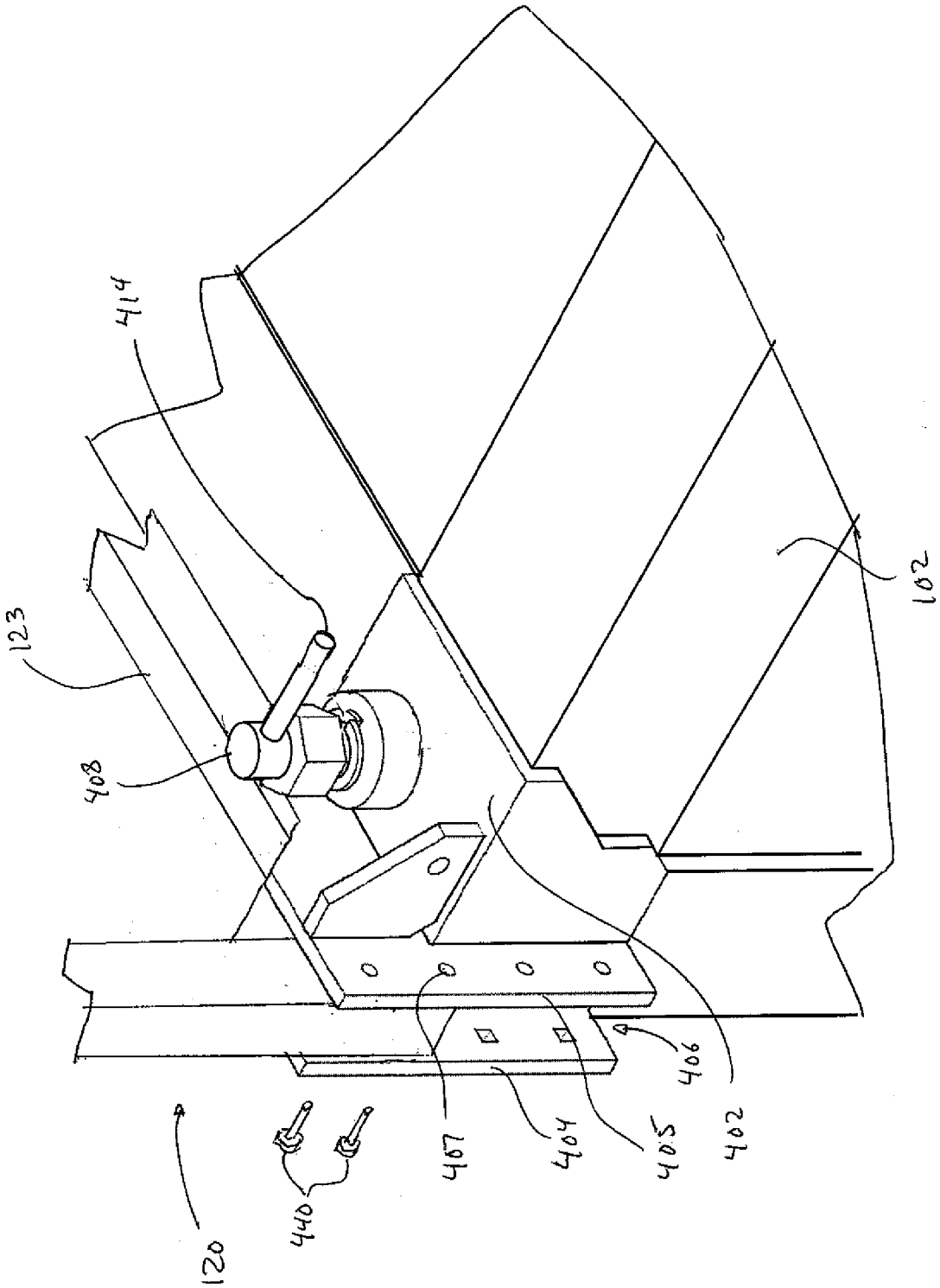

Fig. 10

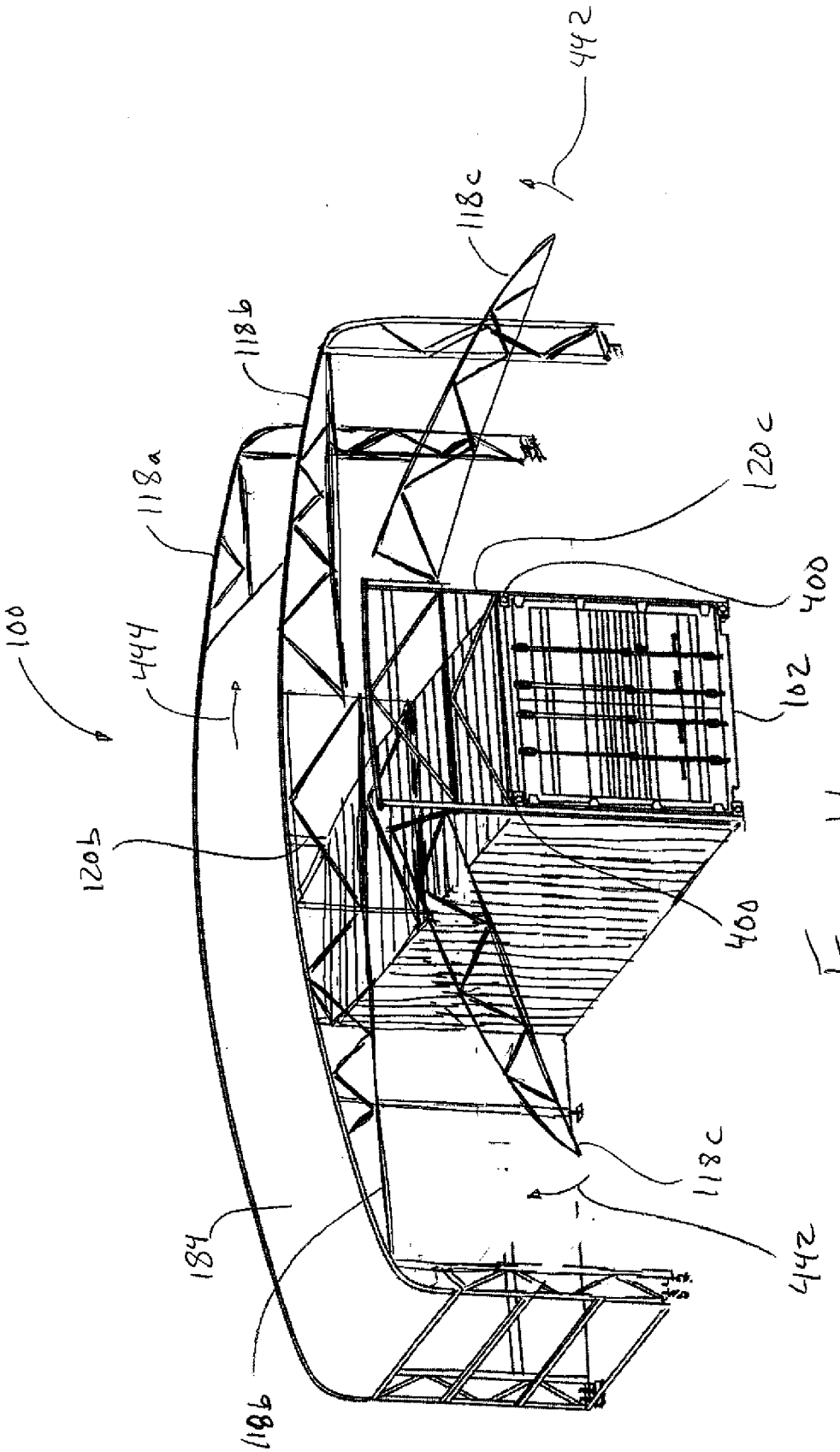

Fig. 11

INTERNATIONAL SEARCH REPORT

International application No.
PCT/CA2014/050420

A. CLASSIFICATION OF SUBJECT MATTER
IPC: ***E04C 5/16*** (2006.01), ***B65D 88/12*** (2006.01), ***B65D 90/02*** (2006.01), ***E04B 1/35*** (2006.01), ***F16B 1/00*** (2006.01), ***F16B 9/02*** (2006.01) (more IPCs on the last page)

B. FIELDS SEARCHED

Minimum documentation searched (classification system followed by classification symbols)
IPC: E04C 5/16, B65D 88/12, B65D 90/02, E04B 1/35, F16B 1/00, F 16B 9/02, B60P 1/64, E04B 1/343, E04H 15/02
USPC: 52/79.1, 52/79.5, 52/79.9

Documentation searched other than minimum documentation to the extent that such documents are included in the fields searched

Electronic database(s) consulted during the international search (name of database(s) and, where practicable, search terms used)
Espacenet, TotalPatent, Queltel Orbit.
Keywords : container, shipping, building, structure, tent,, truss, beam, connect.

C. DOCUMENTS CONSIDERED TO BE RELEVANT

Category*	Citation of document, with indication, where appropriate, of the relevant passages	Relevant to claim No.
X	AU2010212272 A1 (CSONKA, P., et al.) 01 March 2012 (01-03-2012) * the whole document *	1, 3-7
X A	US20100018131 A1 (GREEN, J.) 28 January 2010 (28-01-2010) * the whole document * * Figure 7-9 *	4-7 1-3
X	CN201785871 U (LIANYING, L.) 06 April 2011 (06-04-2011) * figure 2 *	4, 7

☐ Further documents are listed in the continuation of Box C.

☑ See patent family annex.

*	Special categories of cited documents:
"A"	document defining the general state of the art which is not considered to be of particular relevance
"E"	earlier application or patent but published on or after the international filing date
"L"	document which may throw doubts on priority claim(s) or which is cited to establish the publication date of another citation or other special reason (as specified)
"O"	document referring to an oral disclosure, use, exhibition or other means
"P"	document published prior to the international filing date but later than the priority date claimed
"T"	later document published after the international filing date or priority date and not in conflict with the application but cited to understand the principle or theory underlying the invention
"X"	document of particular relevance; the claimed invention cannot be considered novel or cannot be considered to involve an inventive step when the document is taken alone
"Y"	document of particular relevance; the claimed invention cannot be considered to involve an inventive step when the document is combined with one or more other such documents, such combination being obvious to a person skilled in the art
"&"	document member of the same patent family

Date of the actual completion of the international search 09 July 2014 (09-07-2014)	Date of mailing of the international search report 22 July 2014 (22-07-2014)
Name and mailing address of the ISA/CA Canadian Intellectual Property Office Place du Portage I, C114 - 1st Floor, Box PCT 50 Victoria Street Gatineau, Quebec K1A 0C9 Facsimile No.: 001-819-953-2476	Authorized officer Jeremy Garnet (819) 956-8721

INTERNATIONAL SEARCH REPORT

International application No.
PCT/CA2014/050420

Box No. II Observations where certain claims were found unsearchable (Continuation of item 2 of the first sheet)

This international search report has not been established in respect of certain claims under Article 17(2)(a) for the following reasons:

1. ☐ Claim Nos.:
because they relate to subject matter not required to be searched by this Authority, namely:

2. ☐ Claim Nos.:
because they relate to parts of the international application that do not comply with the prescribed requirements to such an extent that no meaningful international search can be carried out, specifically:

3. ☐ Claim Nos.:
because they are dependent claims and are not drafted in accordance with the second and third sentences of Rule 6.4(a).

Box No. III Observations where unity of invention is lacking (Continuation of item 3 of first sheet)

This International Searching Authority found multiple inventions in this international application, as follows:

Group A: Claims 1-3 directed to a coupling unit for securing a structural member to a shipping container
Group B: Claims 4-17 directed to a system for forming a structure around a shipping container

Since the details of the coupling unit are lacking in the independent claim of group B, unity of invention is lacking between the two groups.

1. ☐ As all required additional search fees were timely paid by the applicant, this international search report covers all searchable claims.
2. ☑ As all searchable claims could be searched without effort justifying additional fees, this Authority did not invite payment of additional fees.
3. ☐ As only some of the required additional search fees were timely paid by the applicant, this international search report covers only those claims for which fees were paid, specifically claim Nos.:

4. ☐ No required additional search fees were timely paid by the applicant. Consequently, this international search report is restricted to the invention first mentioned in the claims; it is covered by claim Nos.:

Remark on Protest

☐ The additional search fees were accompanied by the applicant=s protest and, where applicable, the payment of a protest fee.

☐ The additional search fees were accompanied by the applicant's protest but the applicable protest fee was not paid within the time limit specified in the invitation.

☐ No protest accompanied the payment of additional search fees.

INTERNATIONAL SEARCH REPORT

Information on patent family members

International application No.
PCT/CA2014/050420

Patent Document Cited in Search Report	Publication Date	Patent Family Member(s)	Publication Date
AU2010212272 (A1)	01-03-2012	NONE	
US20100018131 (A1)	28-01-2010	US8186110 (B2)	29-05-2012
		AU2009274499 (A1)	28-01-2010
		AU2009274499 (B2)	04-04-2013
		CA2730329 (A1)	28-01-2010
		CA2730329 (C)	13-08-2013
		CN102099265 (A)	15-06-2011
		EP2313330 (A1)	27-04-2011
		EP2313330 (A4)	12-02-2014
		MX2011000809 (A)	18-11-2011
		NZ590657 (A)	28-09-2012
		WO2010011421 (A1)	28-01-2010
CN201785871 (U)	06-04-2011	NONE	

B60P 1/64 (2006.01)