Aug. 5, 1952 M. S. LEAF 2,606,088

COMBINED BANK, COIN CONTROLLED GUM VENDER, AND GAME

Filed Aug. 24, 1950 3 Sheets-Sheet 1

Fig. 1

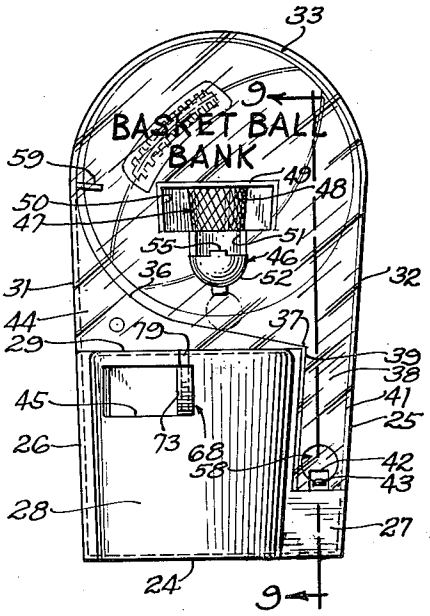

Fig. 2

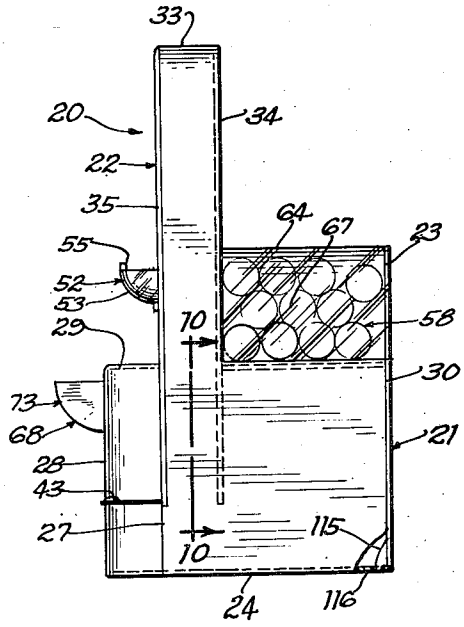

Fig. 3

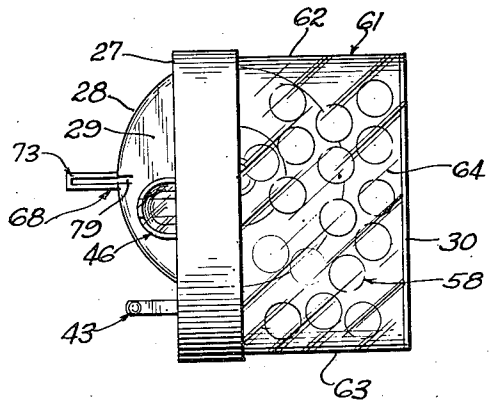

INVENTOR.
Marshall S. Leaf
BY Robert H. Wendt
Atty

Aug. 5, 1952 M. S. LEAF 2,606,088

COMBINED BANK, COIN CONTROLLED GUM VENDER, AND GAME

Filed Aug. 24, 1950 3 Sheets-Sheet 2

Fig. 4

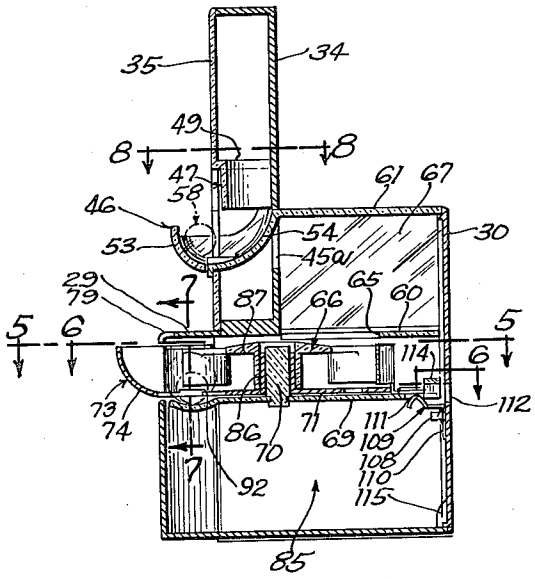

Fig. 5

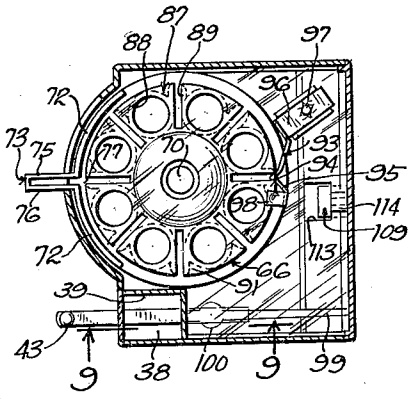

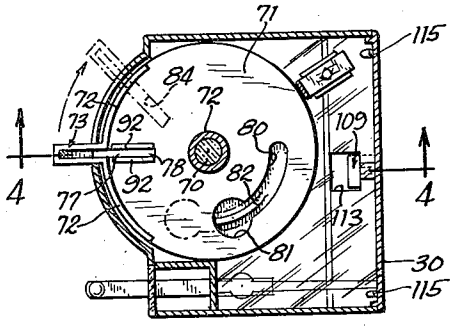

Fig. 6

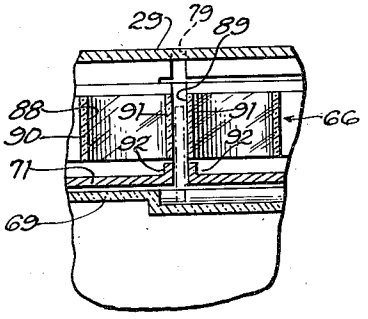

Fig. 7

INVENTOR.
Marshall S. Leaf
BY
Robert K. Wendt
Atty

Aug. 5, 1952 M. S. LEAF 2,606,088

COMBINED BANK, COIN CONTROLLED GUM VENDER, AND GAME

Filed Aug. 24, 1950 3 Sheets-Sheet 3

Fig. 8

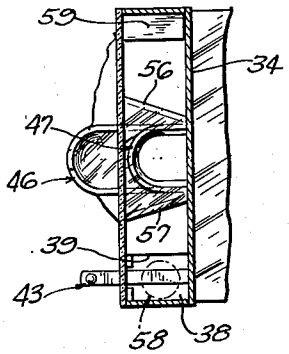

Fig. 9

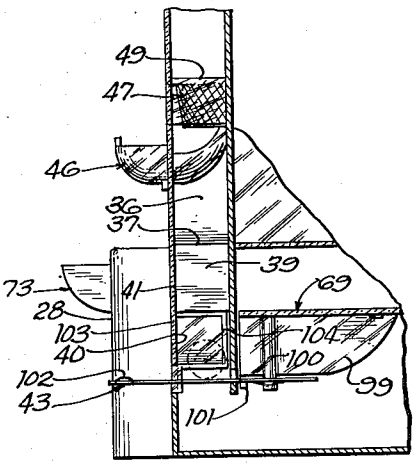

Fig. 10

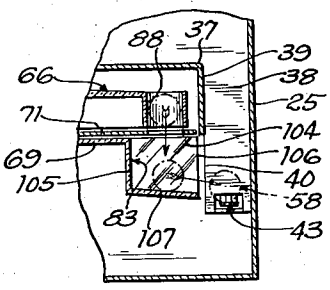

Fig. 11

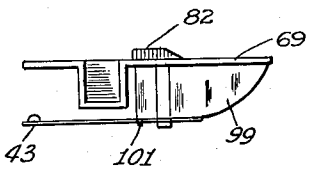

INVENTOR.
Marshall S. Leaf
BY
Robert H. Wendt
Atty

Patented Aug. 5, 1952 2,606,088

UNITED STATES PATENT OFFICE

2,606,088

COMBINED BANK, COIN CONTROLLED GUM VENDER, AND GAME

Marshall S. Leaf, Chicago, Ill., assignor to Leaf Brands, Inc., Chicago, Ill., a corporation of Illinois

Application August 24, 1950, Serial No. 181,180

3 Claims. (Cl. 312—89)

1

The present invention relates to a combined bank, coin controlled gum vender and game, and is particularly concerned with an improved toy adapted to encourage thrift, as well as to afford amusement, and to reward the user whenever a coin is deposited in the bank.

One of the objects of the invention is the provision of an improved coin controlled vending machine for bubble gum in the form of balls, which may be used with dimes, nickels, or pennies, so that any convenient coin of this size may be employed; and the device may serve as a bank in which a child may place such coins for accumulating a sufficient sum of money for a bank account.

Another object is the provision of an improved vending machine which also includes a game of skill so that the user, who places a coin in the vending machine, not only receives a ball of gum, but is permitted to play a game, and in fact must play the game successfully to receive the gum.

Another object of the invention is the provision of an improved device of the class described incorporating a miniature basket ball game in which the game is played with balls of gum, and in which the gum is kept sanitary and the supply on hand is constantly visible as an incentive to the placing of coins in the bank.

Another object is the provision of an improved game of skill, in which the play ball may be edible or made of gum, and in which the ball is controlled by a coin control so that the user secures an edible member for the deposit of his coin; and at the same time the device provides an incentive for the user to practice his skill on the miniature basket ball game.

Another object of the invention is to provide an improved vending machine of the class described, including a rotor which is adapted to receive and pass balls of gum or candy one at a time during the step by step rotation of the rotor; and the same rotor is adapted to receive the coins deposited, the coin itself providing a physical connection between an actuating handle and the rotor until the rotor has moved one step; and a ball is discharged at the same time the coin passes into a container, such as a bank.

Other objects and advantages will be apparent from the following description of the invention and the accompanying drawings, in which similar characters of reference indicate similar parts throughout the several views.

Referring to the three sheets of drawings accompanying the specification,

Fig. 1 is a front elevational view of a game device embodying the invention;

2

Fig. 2 is a side elevational view;

Fig. 3 is a top plan view;

Fig. 4 is a vertical sectional view, taken on the plane of the line 4—4 of Fig. 6, looking in the direction of the arrows;

Fig. 5 is a horizontal sectional view, taken on the plane of the line 5—5 of Fig. 4, looking in the direction of the arrows;

Fig. 6 is a sectional view, taken on the plane of the line 6—6 of Fig. 4, looking in the direction of the arrows;

Fig. 7 is a fragmentary vertical sectional view, taken on the plane of the line 7—7 of Fig. 4, looking in the direction of the arrows;

Fig. 8 is a fragmentary horizontal sectional view, taken on the plane of the line 8—8 of Fig. 4, looking in the direction of the arrows;

Fig. 9 is a fragmentary sectional view, taken on the plane of the line 9—9 of Fig. 5, looking in the direction of the arrows;

Fig. 10 is a fragmentary sectional view, taken on the plane of the line 10—10 of Fig. 2, looking in the direction of the arrows.

Fig. 11 is a fragmentary side elevational view of the partition 69, in partial section, showing the arcuate beveled holding pawl 62 in elevation.

Referring to Figs. 1 to 4, the present device is preferably provided with a housing which is constructed out of a suitable moldable plastic; and in fact the entire device may be constructed out of plastic, with the exception of three springs, which are preferably made of resilient steel or other resilient metal.

The housing 20 is preferably made of a plurality of separate units, such as a base portion 21, a vertical game portion 22, and a merchandise receiving portion 23. The base portion 21 may consist of a thin shell of molded plastic, having a bottom wall 24, a pair of side walls 25 and 26, and a front wall 27, which is preferably provided with a partially cylindrical portion 28, which also has a top wall 29 and extends to the bottom wall 24.

The back side of the housing is preferably open and provided with a cover plate 30, which closes the base and the merchandise receiving portion 23 and is provided with a suitable key controlled lock, further to be described.

The game portion 22 of the housing may consist of a molded plastic shell having a pair of side walls 31, 32 joined by a partially cylindrical top wall 33, all of these walls being supported by a back wall 34. The front of this game portion is open, but is covered with a window 35 of transparent plastic.

The game portion has its curved top wall 33

provided with an inward extension 36 curving over toward the right side of the game portion and terminating at the upper corner 37 of a ball chute 38. The ball chute 38 is formed in the base portion 21 and is formed by the side wall 25 and a downwardly extending parallel wall 39, which parallel wall is provided with a rectangular aperture 40, as can be seen in Fig. 9.

The front window 35 is provided with straight side edges flush with the walls 31 and 32 and with the circular upper edge flush with the outside of the curved wall 33. The window also has a depending straight portion covering the front of the coin chute at 38, this straight portion being indicated at 41 (Fig. 9). The depending portion 41 of the front window has an aperture 42 in its lower end, which is preferably rectangular and provides space for an operating spring 43 to project outward and to permit a limited amount of motion of the spring.

The portion of the housing between the walls 31 and 33 is preferably closed with a front wall portion 44; and the cylindrical front wall portion 28 preferably has a rectangular slot 45.

The inside of the back wall 34 preferably bears a representation of a basket ball; and this wall is provided with an aperture 45a (Fig. 4) for receiving a basket and delivery chute assembly 46.

This basket and delivery chute assembly preferably consists of a molded plastic member which is transparent; and it has a partially cylindrical and U-shaped basket 47, which is open at the top and the bottom, and which may be provided with ribs or grooves 48, simulating the basket ball net.

The upper edge of the basket 47 is integrally joined to a trapezoidal top wall 49, which extends to the front window 22 at the upper edge of a rectangular aperture 50. The rectangular aperture 50 has a downward extension 51, which passes a delivery chute 52 that projects outwardly beyond the front window.

The delivery chute 52 is a substantially half cylindrical trough, terminating in a rounded end wall 53 (Fig. 4) in front, and terminating also at its back in an upwardly extended rounded end wall 54 that extends up to the bottom of the basket 47.

At its front edge the delivery chute may have an upwardly extending member 55 (Fig. 1) to keep the ball from jumping out, but permitting the fingers to grasp the ball from both sides of the trough 52.

The delivery chute assembly 46 has a pair of diagonal walls 56, 57 depending from the top wall 49 and extending over to the lateral sides of the opening 50 in the front window. Thus the delivery chute assembly is closed off on all sides from the interior of the game portion, except at its bottom and its top.

The game ball 58 (Fig. 1) may be projected upwardly and may drop into the basket 47 and, if so, will be delivered out in front of the window 35 by the delivery chute 52.

The game portion preferably has an inwardly extending obstruction 59 projecting inwardly from the side wall 31 at about the level of the top of the basket 47. This obstruction provides something against which the game ball 58 may bounce upward so that it may more readily drop into the basket 47.

The various parts of the housing may be integrally welded together by the use of a solvent or may be secured by means of a suitable cement.

The merchandise receiving portion 23 is formed by means of the back wall 30, a bottom wall 60, and an inverted U shaped member 61. The U-shaped member 61 is substantially rectangular with rounded corners, and comprises two sides 62, 63, and an upper wall 64. The U-shaped member 61 and bottom wall 60 (Fig. 4) are preferably made transparent so that the merchandise in this chamber may be seen at all times, to provide an incentive for the use of the device.

The bottom wall 60 is preferably provided with a partially circular cut-out 65 (Fig. 4), which permits access to the ball sockets of a rotor 66 from the supply of merchandise in the chamber 67. The rotor 66, actuating member 68, and the spring 43 are all preferably supported on a unit carried by a partition 69, which is insertable into the base 30 from the open back.

The side walls 25 and 26 are provided on their inside with pairs of spaced ribs above and below the partition 69, providing guides into which the partition 69 may be slid. The partition 69 has a cylindrical shaft 70 projecting upward and serving as a trunnion for the coin controlled actuator 68.

This coin controlled actuator consists of a circular disc 71 (Figs. 6 and 7); and it has an integral tubular bearing member 72 rotating on the shaft 70. The disc 71 is provided on its front edge with a substantially cylindrical wall 72 extending laterally on each side of a coin chute 73. The length of the wall 72 is sufficient to overlap and close the rectangular aperture 45 whether the coin chute 73 is in its left position or its right position, the latter being shown in Fig. 1.

The coin chute 73 comprises an integral part of the disc and has a curved bottom wall 74 and a pair of parallel side walls 75, 76, forming a slot 78 through the wall 72.

Disc 71 also has a radial slot 77 (Fig. 5) forming a continuation of the slot in the coin chute 73. The coin controlled actuating member 68, which includes the coin chute 73 and disc 71, is rotatably mounted upon the shaft 70; and the top wall 29 of the forward curved portion of the base has a short radial slot 79, which registers with the coin chute when the coin chute is in its right hand position.

The exposed portion of the coin chute is too small to permit any coin to be inserted, except when the coin chute is in the right hand position of Fig. 3, in registry with the short slot 79 in the top wall 29.

The disc 71 also has an arcuate slot 80 (Fig. 6), terminating in a circular hole 81. The arcuate slot 80 receives a stop member 82, which may consist of a spring or an integral rib secured to the partition 69. Thus the limits of movement in a rotative direction for the disc 71 are determined by the combined length of slot 80 and circle 81 engaging the ends of stop 82.

Disc 71 has round aperture 81, which registers with a trough 83 (Fig. 10) when the coin controlled actuator 68 is in its left hand position. This permits a ball to drop into the ball trough 83 after a coin has been inserted and the actuator 68 is moved to the left.

At the same time the coin slot 78 registers with coin slot 84 (Fig. 6) in the partition 69, permitting the coin which has been used to drop into the lower part of the base in a chamber indicated at 85 (Fig. 4).

The rotor 66 consists of a circular member of welded plastic, having a tubular hub 86 and a round body 87 at the top. Hub 86 rotates on

the outside of the tubular bearing 72 of the actuator disc 71. The body 87 of this rotor is circular and has a multiplicity of circular through bores 88 separated by radial slots 89.

The circular through bores have depending cylindrical walls 90; and the radial slots 89 in the rotor 66 are also bordered by depending parallel walls 91 for receiving and guiding the coins.

The actuator 68 has its disc 71 provided with a pair of upwardly projecting ribs 92 (Fig. 6) so that a coin in the slot 78 is supported in vertical position, sliding on the partition 69 and projecting into the slots 89 of the rotor 66. The coin continues to be supported until it reaches the slot 84, when it falls through the partition into the bank chamber 85.

The slots 89 also serve to engage an indexing spring 93 (Fig. 5). This spring has a V-shaped formation 94 engaging in the slots 89. It also has an outwardly projecting camming end 95 permitting it to ride over the corners of the slots. The spring extends peripherally, but has a horizontal attaching flange 96 with an aperture on an integral plastic pin 97.

The attaching flange 98 of the spring serves to hold the rotor and actuating member downward on their bearings.

On its lower side the partition 69 (Fig. 9) supports a depending rib 99. This rib extends forwardly and backwardly and has a projecting cylindrical stud 100 passing through an aperture in the spring 43. Rib 99 has another integral stud 101 passing through the spring and preventing rotation of the spring.

The spring 43 is a leaf spring provided with a ball shaped formation 102 on its outer end, which projects about three fourths of an inch from the front of the housing. The ball trough 83 terminates short of the spring 43, permitting the ball to rest on the spring 43. The partition 69 supports the ball trough 83.

The ball trough 83 is open at the top and has side walls 103, 104 and back wall 105. It is also open at the right side and has an opening at 106 on its right side and a bottom 107, which slopes toward the opening. Thus a ball which is deposited in the trough 83 tends to roll into the chute 38 and is deposited on the spring 43.

The back cover 30 is preferably provided with an inwardly projecting integral stud 108 (Fig. 4), which supports a lock spring 109. This lock spring has a vertical attaching flange 110 riveted on the stud 108 and a horizontal flange provided with a V formation 111 having its apex upward.

There is a key slot 112 directly above the spring 109. Spring 109 engages in a rectangular aperture 113 (Fig. 6) in the partition 69. At the front side of this aperture there is an upwardly extending U-shaped formation 114, which is open at the bottom, providing a downwardly open slot that registers with the key opening 112.

Thus the back can be locked in place by merely snapping the sping 109 into the aperture 113. The back wall 30 has a pair of backward ribs 115 which terminate in downwardly projecting cylindrical lugs (Fig. 2). These lugs fit in apertures 116 in the bottom wall 24 to secure the bottom of the back cover.

As the spring 109 is below the partition 69, it tends to push the lugs 115 into the apertures 116 and to hold the back cover 30 in closed position. Any key which has a flat, narrow shank small enough to be inserted in the slot 112 can be used, if it has an end which is beveled on its lower side.

The lower beveled end of the key will engage the top of the spring 109 at its V formation 111 and force the spring downward to unlock the back cover 30.

The operation of the present device is as follows: When the back has been removed with a suitable key, the merchandise chamber 67 is open and may be filled with balls of gum or candy or the like. A number of these, such as, for example, four, immediately drop into the through bores 88 in the rotor, which are exposed by the wall 60 above the rotor at the aperture 65.

A nickel, dime, or penny may be used and dropped into the coin chute 73. Either of these coins will drop in far enough to rest in one of the slots 89 and in the slot 78 of the disc 71. The coin chute 73 may serve as an actuator 68; and it may be moved toward the left in the rectangular aperture 45. The range of motion of the actuator 68 is limited by the coin chute 73 engaging the ends of the arcuate hole 45.

During this motion the coin in the slot 78 of the disc 71 serves as a physical connection between this disc and the rotor 66 because the coin is also in a slot 89 of the rotor.

The rotation permitted is ended at the left of the aperture 45, when one of the circular apertures 88 of the rotor registers with the aperture 81 in disc 71 and with the aperture in the partition 69. A ball then drops into the ball trough 83 and rolls into the ball chute 38 above the spring 43.

The coin then also registers with the slot 84 in the partition 69 and drops into the bank chamber 85. The user has now deposited a coin and actuated the coin control and has moved a ball of gum or candy into the ball chute above the spring.

Since the present device is to be a toy owned by the child, he has not spent the coin, but has saved it. The child may then press the spring 43 downward with a finger on the rounded end 102, letting the finger snap off the spring. This will cause the spring to impel the ball upward into the game portion 22.

The ball will pass around inside the curved wall 33, will strike the obstruction 59, and rebound upward, and in a large number of cases will drop into the basket 47. If the user fails to get the ball in the basket, the ball will roll down the curved surface 36 into the ball chute 38 again.

The user may try again and again until the ball is deposited in the basket; and in the present game it is relatively easy to secure a basket.

When the ball drops in the basket, it rolls out the ball delivery chute 52, where the user can grasp it; and he then is rewarded for saving a coin. The movement of the coin chute or actuator 68 moves the rotor step by step so that one ball is deposited for each coin.

The rotor snaps over the rib 82, which presents a shoulder, preventing backward movement. The over-hanging part 98 of the spring 93 urges the rotor down on the stop rib 82. The rib or pawl 82 being beveled on its leading edge does not stop the disc 71 from rotating counterclockwise in Fig. 6, but having a sharp shoulder on the pawl 82 at its upper end in Fig. 6 causes the disc 71 to snap down behind the shoulder when it moves far enough and prevents backward or clockwise movement. The shape of this pawl is shown in Fig. 11.

A coin cannot be inserted until the coin chute 73 is moved back to the right hand position in

registry with the slot 79. In any other position the exposed part of the coin chute is too short, even for a dime.

It will thus be observed that I have invented an improved coin controlled vending machine which also incorporates a small basket ball game and a toy bank. Either pennies, nickels or dimes may be employed; and they are saved when deposited, but the user gets a reward in the form of a ball of gum or candy. The user is also permitted to play a game of skill; and until the balls of gum or candy are brought out by making a basket, they are kept in a sanitary condition, but visible to the user. The present device stimulates the thrift of the children using it.

While I have illustrated a preferred embodiment of my invention, many modifications may be made without departing from the spirit of the invention, and I do not wish to be limited to the precise details of construction set forth, but desire to avail myself of all changes within the scope of the appended claims.

Having thus described my invention, what I claim as new and desire to secure by Letters Patent of the United States, is:

1. A dispenser for ball gum or the like, comprising a box of plastic moldable material having a flat base, rear, and sides, and a forward partially cylindrical wall, said latter wall having a rectangular peripherally extending slot, said box having a partition dividing it into a lower coin compartment and an upper dispenser chamber, said partition having a hole for passing a unit of ball gum or the like downward, said partition carrying a depending chute below said hole, guiding a ball into a depending chamber, a shaft carried by said partition concentric with said cylindrical front wall, a rotatable actuating disc carried by said shaft, and having a hole registering with the said partition hole in one position of the disc, an actuating handle carried by the disc and projecting from said slot, a dispenser rotor of molded plastic having a top disc with depending tubes adjacent its periphery, said tubes being open to receive said units and to discharge them into said partition hole, an arcuate beveled holding pawl fixedly carried by said partition and projecting through said actuating disc, said pawl engaging said rotor and permitting only one way rotation of said rotor, a resilient member carried by said partition, and having a resilient holding pawl engaging between said tubes to hold the rotor until it is moved by the actuating disc, said member having a resilient tongue overlying the rotor and urging it against said fixed holding pawl, the tongue permitting the rotor to rise on the bevel of the holding pawl until the rotor passes the point of said pawl and drops back down to be held against reverse rotation.

2. A dispenser for ball gum or the like, comprising a box of plastic moldable material having a flat base, rear, and sides, and a forward partially cylindrical wall, said latter wall having a rectangular peripherally extending slot, said box having a partition dividing it into a lower coin compartment and an upper dispenser chamber, said partition having a hole for passing a unit of ball gum or the like downward, said partition carrying a depending chute below said hole, guiding a ball into a depending chamber, a shaft carried by said partition concentric with said cylindrical front wall, a rotatable actuating disc carried by said shaft, and having a hole registering with the said partition hole in one position of the disc, an actuating handle carried by the disc and projecting from said slot, a dispenser rotor of molded plastic having a top disc with depending tubes adjacent its periphery, said tubes being open to receive said units and to discharge them into said partition hole, an arcuate beveled holding pawl fixedly carried by said partition and projecting through said actuating disc, said pawl engaging said rotor and permitting only one way rotation of said rotor, a resilient member carried by said partition, and having a resilient holding pawl engaging between said tubes to hold the rotor until it is moved by the actuating disc, said member having a resilient tongue overlying the rotor and urging it against said fixed holding pawl, the tongue permitting the rotor to rise on the bevel of the holding pawl until the rotor passes the point of said pawl and drops back down to be held against reverse rotation, said rotor having a pair of radially projecting flanges at its periphery between each pair of tubes for engagement with said resilient member.

3. A dispenser for ball gum or the like, comprising a box of plastic moldable material having a flat base, rear, and sides, and a forward partially cylindrical wall, said latter wall having a rectangular peripherally extending slot, said box having a partition dividing it into a lower coin compartment and an upper dispenser chamber, said partition having a hole for passing a unit of ball gum or the like downward, said partition carrying a depending chute below said hole, guiding a ball into a depending chamber, a shaft carried by said partition concentric with said cylindrical front wall, a rotatable actuating disc carried by said shaft, and having a hole registering with the said partition hole in one position of the disc, an actuating handle carried by the disc and projecting from said slot, a dispenser rotor of molded plastic having a top disc with depending tubes adjacent its periphery, said tubes being open to receive said units and to discharge them into said partition hole, an arcuate beveled holding pawl fixedly carried by said partition and projecting through said actuating disc, said pawl engaging said rotor and permitting only one way rotation of said rotor, a resilient member carried by said partition, and having a resilient holding pawl engaging between said tubes to hold the rotor until it is moved by the actuating disc, said member having a resilient tongue overlying the rotor and urging it against said fixed holding pawl, the tongue permitting the rotor to rise on the bevel of the holding pawl until the rotor passes the point of said pawl and drops back down to be held against reverse rotation, and a transparent box for said units fixedly carried above the said first-mentioned box, and having an aperture above said tubes.

MARSHALL S. LEAF.

REFERENCES CITED

The following references are of record in the file of this patent:

UNITED STATES PATENTS

Number	Name	Date
1,093,667	Wehner	Apr. 21, 1914
1,475,730	Walter	Nov. 27, 1923
1,801,308	Gebert	Apr. 21, 1931
1,905,169	Hartle	Apr. 25, 1933
1,981,931	Vogel	Nov. 27, 1934
1,996,143	Callison	Apr. 2, 1935
1,998,194	Hladky	Apr. 16, 1935