Oct. 30, 1951 C. D. GRAHAM 2,573,434

MOUNTING FOR ROCKET LAUNCHERS

Filed March 8, 1945 2 SHEETS—SHEET 1

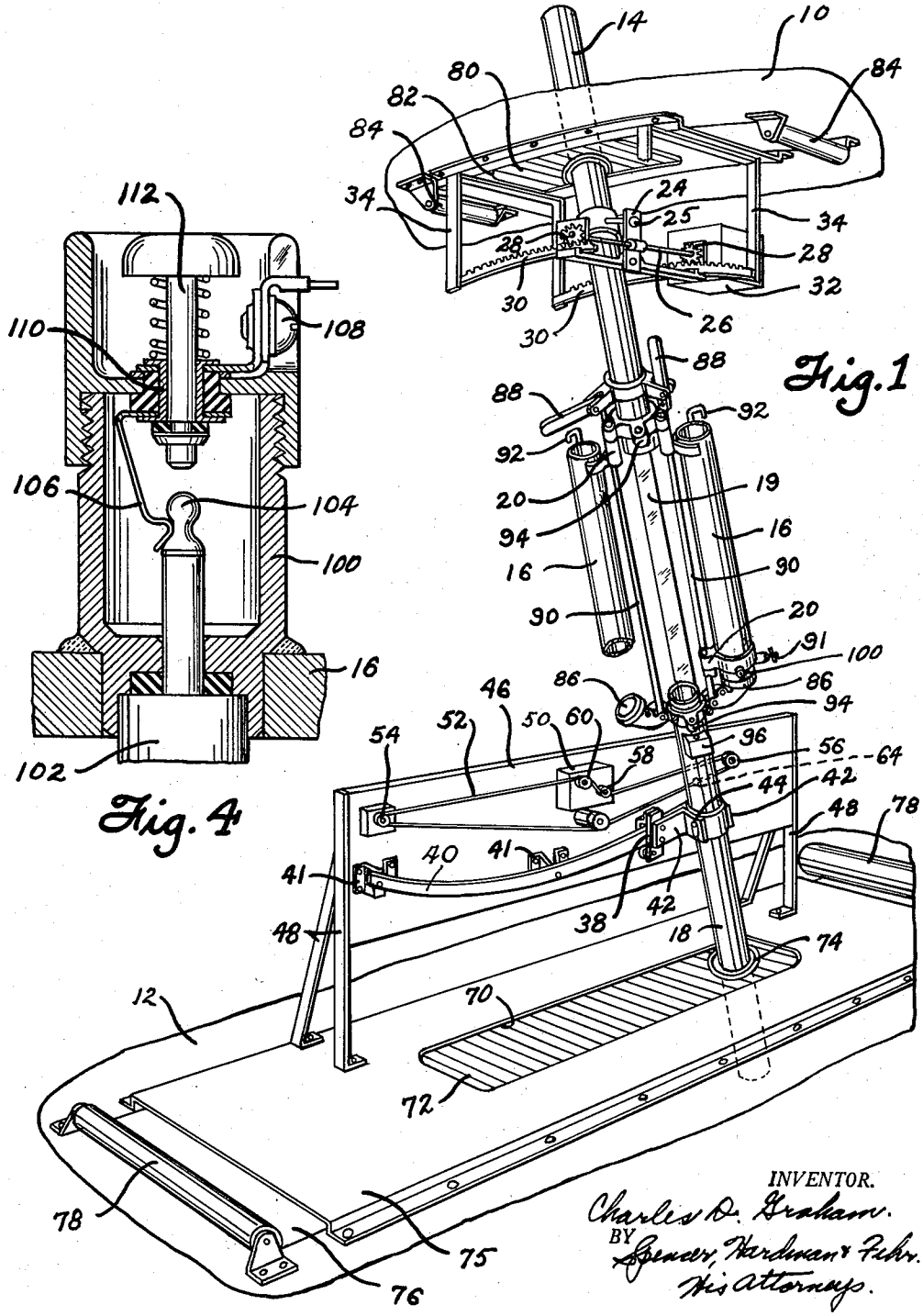

Fig. 1

Fig. 4

INVENTOR.
Charles D. Graham.
BY Spencer, Hardman & Fehr.
His Attorneys.

Oct. 30, 1951 C. D. GRAHAM 2,573,434

MOUNTING FOR ROCKET LAUNCHERS

Filed March 8, 1945 2 SHEETS—SHEET 2

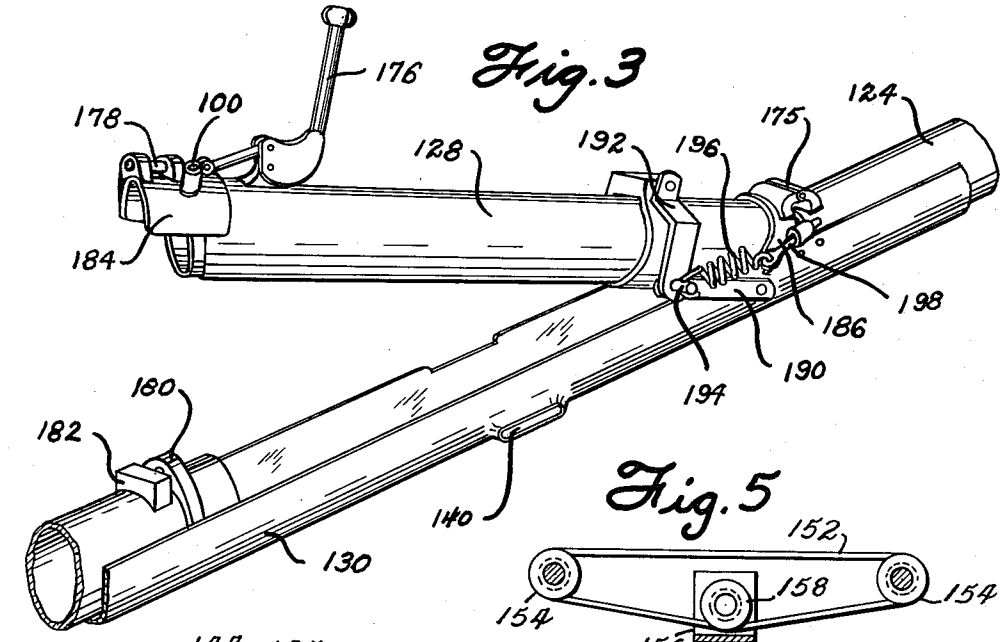

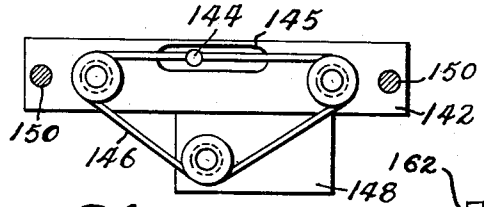

Fig. 6

Fig. 2

INVENTOR.
Charles D. Graham.
BY Spencer, Hardman & Fehr.
His Attorneys.

Patented Oct. 30, 1951

2,573,434

UNITED STATES PATENT OFFICE

2,573,434

MOUNTING FOR ROCKET LAUNCHERS

Charles D. Graham, Dayton, Ohio, assignor to General Motors Corporation, Dayton, Ohio, a corporation of Delaware

Application March 8, 1945, Serial No. 581,603

8 Claims. (Cl. 89—37.5)

1

This invention relates to ordnance and more particularly to a rocket type of gun for use in bomber planes and the like.

It is an object of this invention to so construct and arrange the parts of a rocket type of gun that it may be mounted within the radio or tail compartment of a plane with the ends of the gun projecting through openings in the walls of the compartment.

It is a further object of this invention to provide a novel mounting arrangement which conserves on space and simplifies sealing the openings through which the gun projects.

Another object of this invention is to provide an improved arrangement which facilitates the loading of projectiles into the breech of the gun.

Still another object of this invention is to so construct and arrange the gun and the projectile loading apparatus that one individual can load projectiles into the breech without any difficulty.

A further object of this invention is to provide improved closure structure for closing the openings in the fuselage through which the ends of the gun project.

A further object of this invention is to provide a simplified arrangement for supplying electrical energy through the wall of the gun or launching tube for controlling the launching of the projectiles.

Still another object of this invention is to provide a gun construction in which improved safety means are provided for preventing mishaps and premature firing of projectiles.

Another object of this invention is to provide means for preventing premature closing of the breech during loading.

Further objects and advantages of the present invention will be apparent from the following description, reference being had to the accompanying drawings, wherein a preferred form of the present invention is clearly shown.

In the drawings:

Fig. 1 is a pictorial view, somewhat diagrammatic, showing the arrangement of a rocket launching mechanism disposed within the radio compartment of a bomber plane;

Fig. 2 shows a slightly modified arrangement for mounting a rocket launching device within the tail compartment of a bomber;

Fig. 3 is a fragmentary view showing the details of the breech used in a gun of the type shown in Fig. 2;

2

Fig. 4 is a fragmentary sectional view showing the construction of a plug and socket arrangement used for conducting electrical energy through the wall of the breech;

Fig. 5 is a fragmentary sectional view taken along the line 5—5 of Fig. 2; and

Fig. 6 is a fragmentary sectional view taken along the line 6—6 of Fig. 2.

Referring now to Fig. 1 of the drawings wherein I have shown an improved arrangement for mounting a rocket or open breech type of gun within an airplane, reference numerals 10 and 12 designate the top and bottom walls of an airplane's fuselage. Reference numerals 14, 16 and 18 designate the main barrel, the breech tube sections and the blast tube, respectively, of the gun. The blast tube 18 and the main barrel or launching tube 14 are connected by a rigid member 19 which maintains the tube sections in alignment. The breech sections 16 are pivotally mounted by any suitable means such as hinges 20, so as to swing in and out of alignment with the firing tube and the blast tube. Two breech sections are provided so that one may be loaded while the other is in use. The lower hinges have been broken away to better illustrate other details.

The upper end of the gun is mounted for traverse crosswise of the plane whereas the lower end of the gun is mounted for traverse lengthwise of the plane. Thus, the upper end of the gun is pivotally connected to a bracket 24 which is adapted to move from side to side with the shaft 26. The shaft 26 is provided with a pair of pinions 28 which cooperate with the curved rack sections 30 in the manner indicated. The shaft 26 and the pinions 28 are rotated by a drive motor 32 which may be a reversible electric motor, a reversible hydraulic motor, or the like. The curved racks 30 may be suspended from the ceiling 10 by any suitable means such as the brackets 34 which are arranged as shown. Rotation of the shaft 26 causes the upper end of the gun to move transversely relative to the longitudinal axis of the plane. The lower end of the gun is pivotally supported on the movable carriage 38 which is adapted to traverse along the curved track 40. The carriage 38 is provided with a pair of slotted brackets such as the bracket 42 shown in Fig. 1, each of which cooperates with a pivot pin such as the pin 44 carried by the blast tube 18, for pivotally mounting the lower end of the gun.

Thus when the motor **32** causes lateral movement of the upper end of the gun, the gun pivots about the oppositely projecting pins **44** which are supported by the slotted bracket elements **42**.

The curved track **40** is mounted on a support **46** secured to the bottom wall **12** of the fuselage by means of the brackets **48**. A reversing motor **50** is secured to the support **46** so as to operate an endless chain **52** which passes over the drive sprocket **60**, the guide sprockets **54**, **56** and **58**, and a guide pulley beneath the drive sprocket **60**, all arranged as shown. The endless chain **52** is secured to the blast tube **18** at **64** with the result that operation of the chain **52** by the motor **50** causes the lower end of the rocket gun to swing longitudinally within the fuselage of the plane. As the lower end of the gun thus swings longitudinally within the plane it pivots about the pin **25** carried by the bracket **24**. The curved track **40** is secured to the support **46** by suitable bracket means **41** arranged as shown.

The bottom wall or floor **12** of the plane is provided with a slot **70** within which the lower end of the gun may be moved. An articulated closure member **72** which is secured to the blast tube **18** by means of a bellows **74** or other suitable flexible connection, moves with the blast tube **18** so as to keep the opening **70** closed. A guard **75** serves to cover and guide the closure member **72**. The member **72** is preferably made up in the form of a plurality of metal slats which are connected together in the same manner as the slats which make up the closure member of a roll top desk. The ends of the articulated member **72** are fastened to canvas strips **76** which are adapted to be rolled up on rollers **78** arranged as shown for taking up any slack in the canvas. A similar but smaller articulated closure member **80** is secured to the upper end of the gun for closing the opening **82** in the top wall of the gun. Reference numerals **84** designate rolls at the ends of the member **80**.

The closure arrangement described hereinabove has the advantage of providing a substantially smooth uninterrupted exterior surface and at the same time has adequate strength to withstand the forces resulting from pressures built-up during flight and during firing of the gun. The rollers used for rolling up the canvas ends are of the type generally used for this purpose and act much the same as window curtain rollers in that a spring (not shown) is provided for causing the rollers to roll up any loose canvas. Inasmuch as rollers of this type are well known in the art, and inasmuch as the specific roller structure per se does not form a part of this invention, the rollers have not been shown or described in detail.

The breeches are designed so that the projectiles may be dropped in through the upper ends thereof for loading the gun. A pivoted end cap **86** is provided adjacent the lower end of each breech tube and is arranged to be directly in line with the breech tube when the breech tube is swung into the shell loading position as shown in Fig. 1. Each of the caps is pivotally supported adjacent the upper end of the blast tube **18** as shown and is adapted to be controlled by a pivoted hand lever **88** which operates a reciprocating rod **90** which moves the attached cap member into and out of closed position relative to its breech section. The arrangement of each handle is such that it obstructs the upper end of its related breech tube so as to prevent loading a projectile into the breech tube except when the handle has been moved upwardly far enough to

cause the cap **86** operated thereby to move into fully closed position so that the cap seals the lower end of the breech. By virtue of the above described arrangement, it is impossible to feed the projectile into the breech section unless the end cap **86** is in the fully closed position and when the end cap **86** is in its fully closed position it seals the lower end of the breech section so that upon lowering a projectile into the breech section an air cushion is formed at the lower end of the projectile which prevents too rapid dropping of the projectile. The clearance between the projectile and the inner wall of the breech tube is sufficient to allow a small amount of air to escape past the projectile with the result that the projectile slowly drops into position. A shear pin **91** is provided adjacent the lower end of the breech tube for holding the projectile in the breech after the end cap is moved out of sealing engagement with the breech. This shear pin holds the projectile in its proper position until the projectile is fired. The shear pin **91** does not shear during normal operation of the gun but in the event of a defective projectile which bursts so as to send a portion of the projectile through the blast tube and another portion of the projectile through the barrel, the shear pin shears so as to allow the projectile to leave the breech before too high a pressure is built up in the breech. The shear pins **91** are adapted to be replaceable in the event of such a mishap.

Each breech is adapted to be latched in the closed position by means of a latch element **92**, one of which is carried by each breech. The latch elements **92** are in the form of long rods slidably carried by the breech with the upper and lower ends adapted to engage within the latch keepers **94** in accordance with well known practice. The lower end of each latch element is designed to operate a switch **96** located directly in line with the bottom keeper **94**. The switch **96** is arranged in the firing circuit so that the gun cannot be fired unless one of the latch elements **92** has been fully moved into breech locking position so as to close the switch **96**.

Since the firing of the projectiles is controlled electrically, it is necessary to provide means for supplying electrical energy to the projectile within the gun. Prior to my invention, it was customary to leave an opening in the wall of some portion of the gun through which the electric leads would pass and in order to eliminate such an opening I have provided an improved arrangement for making an electrical connection from the exterior of the gun to the projectile within the gun. As shown in Fig. 4, this improved connection somewhat resembles a telephone jack assembly in that it includes a socket portion generally designated by the reference numeral **100** and a removable plug portion generally designated by the reference numeral **102**. The socket **100** passes through the wall of the breech and is adapted to be welded or otherwise secured to the breech with its inner end substantially flush with the inner surface of the breech tube so as not to interfere with free movement of the projectile. Each projectile is provided with its own conventional flexible firing wire which is connected to a plug such as the plug **102** which is adapted to be inserted into the socket **100** prior to firing of the gun. As shown in Fig. 4, the plug **102** is provided with the usual form of contact **104** which makes contact with the complementary spring contact **106** mounted within the socket **100** in the manner shown. The contact **106** is electrically connected to the terminal **108** by means of

the bushing 110. The bushing 110 serves to support a plunger 112 which is provided for ejecting the plug 102 after the rocket which pulls loose from the plug has been fired. The socket 100 is provided adjacent the end of the breech section as shown and consequently can be inserted or removed while a conventional projectile is in the breech without interfering with the projector.

By virtue of the above described arrangement, the plug and socket serves as a very convenient arrangement for supplying electrical energy to the projectiles and at the same time serves as an emergency safety switch means in that the electrical connection to the projectile may be broken merely by pushing in on the plunger 112. Thus the projectile cannot be fired until the plug 102 has been inserted into the socket 100 and the breech has been securely latched so as to close the circuit through the switch 96 which is also arranged in the firing circuit.

Figs. 2 and 3 of the drawings show a modified open breech type gun arrangement which incorporates many of the features incorporated in the gun shown in Fig. 1. A gun of the type shown in Figs. 2 and 3 can be used in combination with a gun of the type shown in Fig. 1 so as to make it possible to shoot rockets upwardly and/or rearwardly from the same plane. The arrangement shown in Figs. 2 and 3 is especially suitable in a tail gun installation. In this modification, the blast tube 120 is curved in the manner shown so as to direct the blast downwardly through the opening 121 in the bottom wall 122 of the plane. The main barrel 124 is directed through an opening 126 in the tail of the plane so as to make it possible to shoot rearwardly. A hinged breech section 128 is provided intermediate the blast section 120 and the barrel section 124. The sections 120 and 124 are rigidly connected to one another by means of the channel member 130. The tail gun is pivotally carried by the U-shaped supporting element 132 which is designed to swing about the pivot 134. A second support 136 is provided which is movable both vertically and laterally so as to aim the gun. The support 136 is substantially U-shaped in form and is provided with pin means 138 for engagement with slot means 140 in the channel member 130. The support 136 is slidably mounted on the cross bar 142 and includes a downwardly extending projection 144 which passes through a slot 145 in the cross bar 142 as shown. The projection 144 is secured to an endless chain 146 operated by a reversible motor 148 carried by the cross bar 142. Operation of the motor 148 serves to move the support 136 from one side to the other for aiming purposes. As the support 136 is moved from one side to the other, the gun swivels about the pin 134. The cross bar 142 is adapted to be lowered and raised by rotation of the screws 150 which cooperate with threaded apertures in the cross bar 142. The screws 150 are designed to be operated by means of the endless chain 152 which passes over sprockets 154 carried at the upper ends of the screws 150. The endless chain 152 is in turn adapted to be operated by a reversible motor 156 arranged as shown with a drive sprocket 158 in driving engagement with the endless chain 152. The motor 156 is carried by the cross bar 160 which in turn is carried by the main frame 162. A portion of the main frame has been broken away, as shown, so as to more clearly show the control mechanism. As best shown in Fig. 3, the breech section 128 is secured to the barrel 124 by means of a hinge 175. A latch generally designated by the reference numeral 176 is provided for latching the breech in its fully closed position. The latch 176 includes a latching bar 178 for engagement with the keeper 180. A firing switch 182 corresponding to the switch 96 shown in Fig. 1 has been provided, as shown. The breech section 128 is provided with a flare shield 184 which prevents any of the blast from escaping into the interior of the plane at the joint between the breech and the blast tube. A similar flare shield 186 is provided at the hinge end of the breech. Somewhat similar blast shields are used in the gun shown in Fig. 1 but in order to simplify the disclosure in Fig. 1 the blast shields are omitted.

Since the breech 128 is of rather heavy construction, it is apparent that considerable force would be required to raise the breech section for reloading purposes unless some provision was made for counterbalancing the weight of the breech section. In Fig. 3 of the drawings wherein I have shown the structural details of the breech used in Fig. 2, there is shown a counterbalancing means which comprises a first lever 190 pivotally secured to the channel member 130 at its one end and a second lever 192 pivotally secured to the breech at its one end and pivotally connected at its other end to the first lever 190 by means of the pin 194. A spring 196 having its one end connected to the pin 194 and having its other end anchored to the channel member 130 by means of the bolt 198, cooperates with the levers 190 and 192 to counterbalance the breech so as to make the breech very easy to open and close. The spring 196 normally biases the breech to its open position so that the operator may load a projectile into the breech without having to bother about holding the breech in the elevated position while loading the projectile into the breech. The arrangement of the levers relative to the spring is such that only a small amount of force is necessary to move the breech to the closed position even though the spring is under considerable tension when the breech is in the closed position. The counterbalancing mechanism has been omitted from the diagrammatic disclosure in Fig. 2 in order not to obscure the rest of the structure shown therein. Fig. 3 shows the actual construction of the counterbalancing mechanism used on the gun shown in Fig. 2. The breech 128 is provided with a socket 100 which is identical to the corresponding socket used in Fig. 1.

While I have shown a single breech of the hinged type in Figs. 2 and 3 it is obvious that a pair of breech sections arranged somewhat similar to the breech sections shown in Fig. 1 could be provided in the gun shown in Fig. 2. In other words, the tail gun could be provided with a pair of breech sections in place of the single breech section shown.

Flexible diaphragms 200 and 202 have been shown for purposes of illustration for closing the openings through which the blast tube 120 and the barrel 124 project whereas closure members of the general type shown in Fig. 1 could be used. The flexible diaphragms 200 and 202 are flexible enough to permit movement of the gun for aiming purposes.

While the form of embodiment of the invention as herein disclosed constitutes a preferred form, it is to be understood that other forms might be adopted, as may come within the scope of the claims which follow.

What is claimed is as follows:

1. In combination, an airplane having walls en-

closing a compartment, a rocket gun, movable means for supporting the gun within said compartment with the muzzle end of the gun projecting through one wall of said compartment and with the blast end of the gun projecting through a different wall of said compartment, said supporting means including a first traversing means for shifting one end of said gun relative to the one wall in a first plane, and a second traversing means for shifting the other end of the gun relative to the different wall in a second plane arranged substantially at right angles to said first named plane.

2. In combination with an airplane having walls enclosing a compartment, an open breech gun, an elongated opening in one wall of said compartment through which the muzzle end of said gun projects, an elongated opening arranged transversely with respect to the first mentioned opening in another wall of said compartment through which the blast end of the gun projects, means for mounting said gun comprising first laterally traversable pivotal means about which one end portion of said gun pivots and second laterally traversable pivotal means about which the other end portion of said gun pivots arranged substantially transversely to said first pivotal means, and movable closure means for each of said openings movable with the adjacent end portions of the gun for allowing for lateral movement of the gun relative to each of said openings.

3. In combination with an airplane having walls enclosing a compartment, an open breech gun, an opening in the top wall of said compartment through which the muzzle end of said gun projects, an opening in the bottom wall of said compartment through which the blast end of said gun projects, and means for supporting the gun relative to said compartment comprising a first pivotal means movable sideways in a first plane and a second pivotal means movable sideways in a second plane arranged substantially at right angles to said first named plane.

4. In combination with an airplane having a fuselage formed of fixed top, bottom, side and end walls, an open breech type gun intersecting a pair of walls of said airplane and having its muzzle end passing through an opening in one of said walls and having its blast end passing through an opening in another of said walls, means for aiming said gun comprising transversely arranged traversing means located adjacent opposite ends of the gun for moving the opposite ends of the gun transversely with respect to each other.

5. In combination with an airplane having a fuselage formed of fixed top, bottom, side and end walls, one of said walls having an opening, another of said walls having an opening, a rocket type of gun mounted on said plane with the opposite ends thereof projecting through said openings, means for aiming said gun including transversely arranged traversing means located adjacent opposite ends of the gun for moving the opposite ends of the gun transversely with respect to each other for distributing the lateral movement of the gun between both ends.

6. In combination with an airplane having a rocket gun compartment having its longitudinal axis extending lengthwise of the plane, an open breech type gun arranged substantially vertically within said compartment with one end projecting through the top wall of said compartment and another end projecting through the bottom wall of said compartment, said top wall having a transversely extending slot within which the upper end of the gun is movable, the bottom wall of said compartment having a longitudinally extending slot within which the bottom end of the gun may be moved, means for supporting the upper end of the gun for transverse movement, and means for supporting the lower end of the gun for longitudinal movement.

7. In combination, walls enclosing a compartment, a gun extending through the compartment and having one end portion projecting through a first wall portion and the opposite end portion projecting through a second wall portion, said first wall portion being provided with an elongated opening through which the one end portion of the gun projects, said second wall portion for receiving the opposite end portion of the gun being provided with an elongated opening transversely arranged relative to the elongated opening in the first wall portion, a first traversing supporting means movable relative to the first wall portion for supporting and guiding the movement of the one end portion of the gun in the opening in the first wall portion, and a second traversing supporting means movable relative to the second wall portion and transversely arranged relative to the first traversing means for supporting and guiding the opposite end portion of the gun in the opening in the second wall portion.

8. In combination, walls enclosing a compartment, a gun extending through the compartment and having one end portion projecting through a first wall portion and the opposite end portion projecting through a second wall portion, said first wall portion being provided with an elongated opening through which the one end portion of the gun projects, said second wall portion for receiving the opposite end portion of the gun being provided with an elongated opening transversely arranged relative to the elongated opening in the first wall portion, a first moving and guide means for moving and guiding one end portion of the gun from one end to the other end of said elongated opening in said first wall portion, and a second moving and guide means for moving and guiding the opposite end portion of the gun from one end of the transversely arranged elongated opening in the second wall portion to the other end of this opening.

CHARLES D. GRAHAM.

REFERENCES CITED

The following references are of record in the file of this patent:

UNITED STATES PATENTS

Number	Name	Date
1,276,444	Taylor	Aug. 20, 1918
1,311,791	Davis	July 29, 1919
1,734,501	Schwoebel	Nov. 5, 1929
2,076,256	Swalm et al.	Apr. 6, 1937
2,353,086	Schaaff	July 4, 1944
2,451,522	Uhl et al.	Oct. 19, 1948
2,460,321	Walker	Feb. 1, 1949

FOREIGN PATENTS

Number	Country	Date
59,668	Germany	Nov. 6, 1891
441,084	Great Britain	Jan. 13, 1936
804,838	France	Aug. 10, 1936
493,115	Great Britain	Oct. 3, 1938