Sept. 2, 1952 P. L. WILLIAMS 2,609,120

NESTABLE CONTAINER

Filed Feb. 20, 1950

Fig. 1

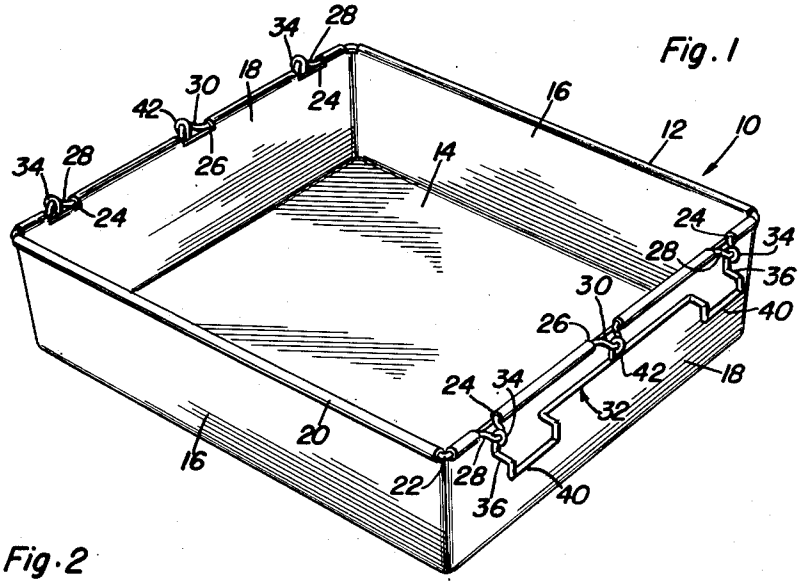

Fig. 2

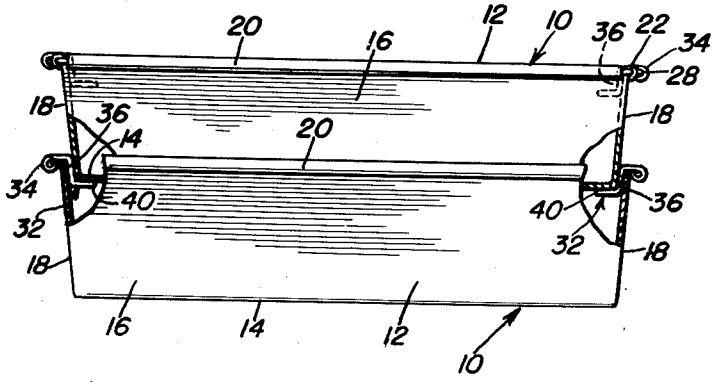

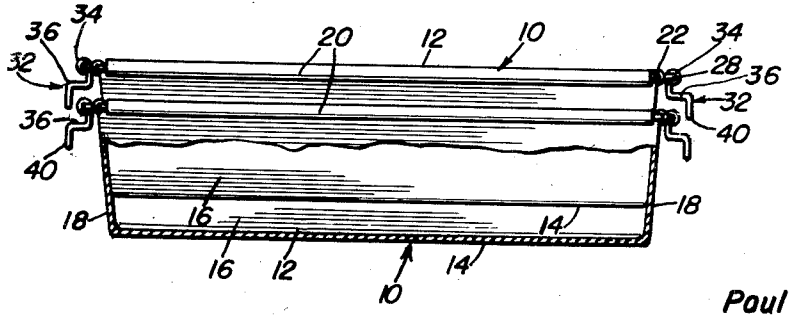

Fig. 3

Paul L. Williams

INVENTOR.

BY Clarence A. O'Brien and Harvey B. Jacobson

Attorneys

Patented Sept. 2, 1952

2,609,120

UNITED STATES PATENT OFFICE

2,609,120

NESTABLE CONTAINER

Paul L. Williams, Carthage, N. Y., assignor of fifty per cent to Durkee Bakery of Carthage, Inc., Carthage, N. Y., a corporation of New York

Application February 20, 1950, Serial No. 145,145

1 Claim. (Cl. 220—97)

1

This invention relates to new and useful improvements and structural refinements in nestable containers, more particularly, containers such as are used for delivering bread from bakeries to stores, or the like, and the principal object of the invention is to provide a container which may be nested on another container in two different manners, namely, in a closely spaced relation when the containers are empty, or in a substantially spaced relation when they are filled with bread, the latter arrangement affording sufficient clearance to assure that the bread does not sustain damage.

This object is achieved by the provision of a container which consists of a receptacle having upwardly and outwardly extending or slanting side walls, an important feature of the invention residing in the provision of keeper members which are hinged to upper edges to the receptacle and may be swung from an inoperative position outside the receptacle to an operative position therewithin, whereby another similar container may be nested in substantially spaced relation above the bottom of the underlying container, without damaging the bread in the latter.

Some of the advantages of the invention reside in its simplicity of construction, in its efficient and expeditious operation, and in its adaptability to economical manufacture.

With the above more important objects and features in view, and such other objects and features as may become apparent as this specification proceeds, the invention consists essentially of the arrangement and construction of parts as illustrated in the accompanying drawings, in which:

Figure 1 is a perspective view of the invention;

Figure 2 is a side elevational view, partially broken away, showing two containers nested in a substantially spaced relation; and

Figure 3 is a side elevational view, similar to that shown in Figure 2, but showing two containers nested in closely spaced relation.

Like characters of reference are employed to designate like parts in the specification and throughout the several views.

Referring now to the accompanying drawings in detail, the invention is embodied in a nestable container which is designated generally by the reference character 10 and consists of a substantially rectangular receptacle 12 having a bottom 14 and pairs of upwardly and outwardly extending side walls 16, 18.

By virtue of its upwardly and outwardly extending or sloping side walls, the receptacle 12

2

may be nested in another, similar receptacle, so that the bottoms of the two receptacles are disposed in closely spaced relation, as is best shown in Figure 3. This nesting is, of course, possible only when the containers are empty.

The side walls 16, 18 of the receptacle 12 have rolled upper edge portions to provide a perimetric bead 20 which accommodates a reinforcing rod 22, the bead being broken or recessed at the corners of the receptacle to facilitate fabrication in a conventional manner.

Moreover, the bead 20 on the side walls 18 is provided with a pair of recesses 24 and with a third recess 26 which is disposed between the recesses 24, so that portions of the reinforcing rod 22 extending through these recesses are exposed. It is to be noted that these exposed portions are angulated outwardly so as to provide outwardly offset V-shaped hinge members 28 in the recesses 24 and similar hinge members 30 in the recesses 26 as is best shown in Figure 1.

A pair of keeper members designated generally by the reference character 32 are hingedly mounted at the upper edges of the two opposing side walls 18, each of these keeper members consisting of a piece of angulated wire which is provided at the ends thereof with a a pair of eyes 34 which are rotatable on the outwardly offset portions or hinge members 28 so that the keeper members 32 may be swung from an inoperative position outside the receptacle as shown in Figures 1 and 3, to an operative position within the receptacle, as illustrated in Figure 2.

Portions of the keeper wires adjacent the eyes 34 afford relatively short shanks 36 which are adapted to rest on the inner surfaces of the side walls 18 when the keeper members are swung inwardly as shown in Figure 2, while intermediate portions of the keeper wires afford substantially U-shaped supporting elements 38 which project inwardly from the inner surfaces of the side walls 18 when the keeper members are in their operative positions, whereby another container like the container 10, may be nested on the first container by having its bottom supported by the elements 40 in substantially spaced relation above the bottom of the underlying container, as illustrated in Figure 2. It is to be noted that sufficient space exists between the bottoms of the two containers to accommodate the contents, but when the containers are empty, the keeper members 32 may be simply swung outwardly so that the containers may be nested in closely spaced relation, as shown in Figure 3.

In order to prevent center portions of the

keeper wires **32** from bending, suitable loops **42** may be provided thereon to rotatably engage the offset portions of the rod **22** disposed in the recesses **26**, as shown in Figure 1.

It is believed that the advantages and use of the invention will be clearly apparent from the foregoing disclosure and, accordingly, further discussion thereof at this point is deemed unnecessary.

While in the foregoing there has been shown and described the preferred embodiment of this invention it is to be understood that minor changes in the details of construction, combination and arrangement of parts may be resorted to without departing from the spirit and scope of the invention as claimed.

Having described the invention, what is claimed as new is:

In a nestable container, the combination of a substantially rectangular receptacle including a bottom and upwardly and outwardly extending side walls having rolled upper edge portions to provide a perimetric bead, a reenforcing rod positioned in said bead, the bead on two opposing side walls being provided with recesses whereby at least two longitudinally spaced portions of said rod are exposed on each of the two opposing side walls, and a pair of keeper members provided on the respective opposing side walls and each consisting of an angulated wire provided at opposite ends thereof with eyes rotatably mounted on said spaced portions of said rod whereby said wires may be swung from an inoperative position outside said receptacle and spaced therefrom to an operative position inside the same, intermediate portions of said wires in an operative position affording substantially vertical shanks engageable with inner surfaces of the respective opposing side walls and substantially U-shaped inwardly projecting support elements whereby another like receptacle may be supported in a substantially spaced position above said bottom, said spaced exposed portions extending outwardly from said side walls and being angulated in a horizontal plane to afford outwardly offset hinge members to rotatably receive said eyes, and said support elements having short shanks comprising intermediate portions of the elements, said shanks extending substantially normal to portions of the elements at either end of the shanks and engaging inner surface portions of said side walls when in operative positions, said shanks being offset from said eyes a distance substantially equal to the outward extension of the exposed spaced portions, all portions of said elements being spaced from said side walls when in inoperative position so that the elements are not ordinarily fouled by expanding food products during the baking of the same in said container.

PAUL L. WILLIAMS.

REFERENCES CITED

The following references are of record in the file of this patent:

UNITED STATES PATENTS

Number	Name	Date
1,219,969	Lowe	Mar. 20, 1917
1,689,217	White	Oct. 30, 1928
2,175,390	Harrison	Oct. 10, 1939
2,401,063	Fordon	May 28, 1946