May 22, 1951 J. C. TAYLOR, JR 2,554,277

MAXILLARY MANDIBULAR RELATER

Filed June 11, 1948

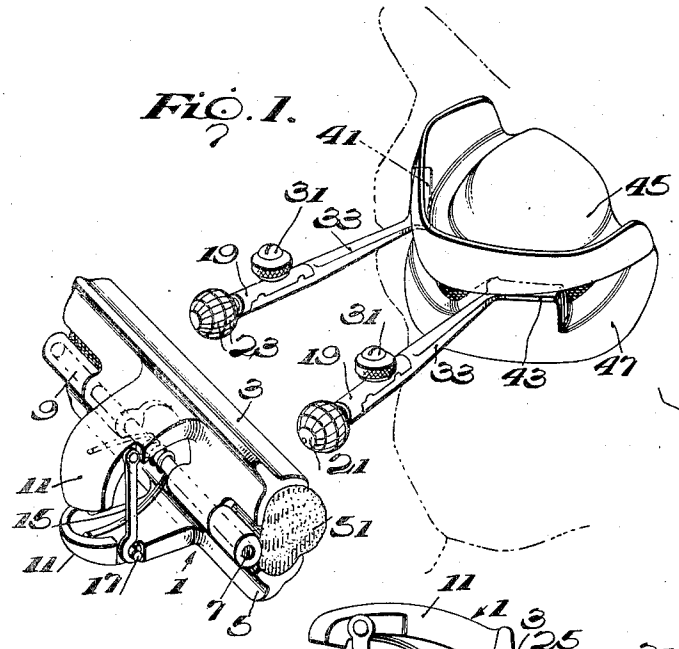

FIG. 1.

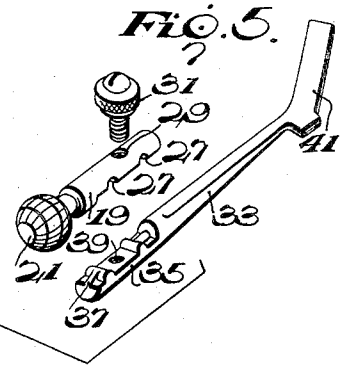

FIG. 5.

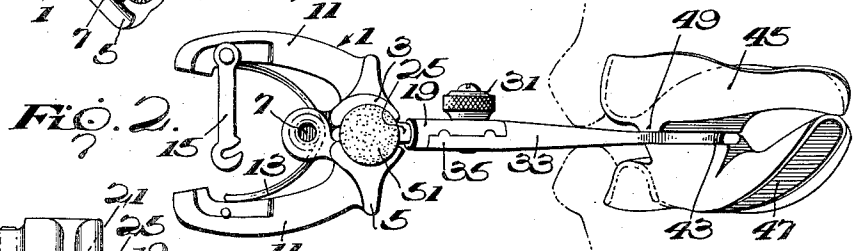

FIG. 2.

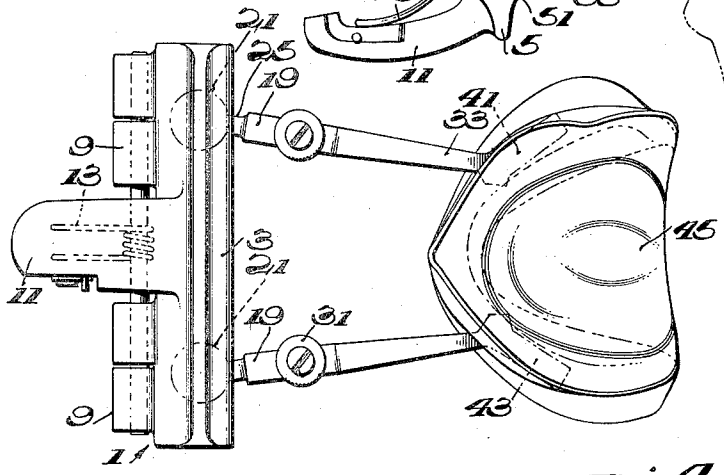

FIG. 3.

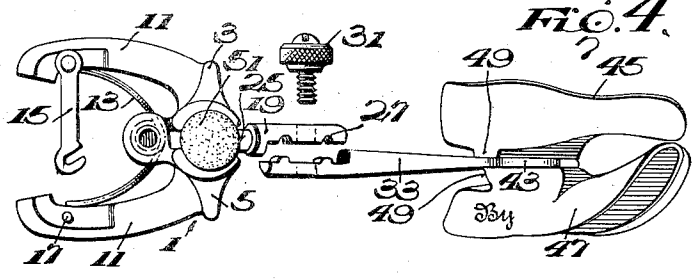

FIG. 4.

Inventor

James C. Taylor Jr.

By

Peck & Peck

ATTORNEYS

Patented May 22, 1951

2,554,277

UNITED STATES PATENT OFFICE

2,554,277

MAXILLARY MANDIBULAR RELATER

James C. Taylor, Jr., Hendersonville, N. C.

Application June 11, 1948, Serial No. 32,510

7 Claims. (Cl. 32—17)

1

This invention relates broadly to the artificial denture art, and in its more specific aspects it is concerned with an apparatus for use in the dentist's office and in the dental laboratory in the making of artificial dentures.

This invention is an improvement of the maxillary mandibular relater which is disclosed in my United States Patent No. 2,299,285, October 20, 1942.

One of the primary objects of my invention is to provide a method and apparatus for use in the production of artificial dentures which will insure the proper occlusion of the finished dentures. One of the serious defects in artificial dentures, and one which causes considerable discomfort to the users thereof results from malocclusion of the dentures, and the dental technician by using the method and apparatus involved in this application will be enabled to produce dentures in which the occlusion is correct and in accordance with the actual angular relationship of the maxillary and mandibular ridges of the patient's mouth.

It is conventional in the preparation of artificial dentures to have a patient bite into or against bite rims, in order to obtain or determine the mandibular and maxillary relationship. The use of these "bite" impressions is one of the causes of many misfit dentures because the true and accurate relationship of the maxillary mandibular ridges of the mouth is not obtained from a "bite" impression. This is due to the fact that when the patient bites in the wax impression the muscles of the jaw are tense and the mandibular is therefor forced out of its normal position, and either unilateral or bilateral protrusion thereof results. Hence the "bite" impression fails to give a true record of the relationship of the maxillary and mandibular ridges of the patient's mouth.

By the utilization of my method and apparatus the necessity for the customary "bite" impression is eliminated, and instead of a "bite" impression a patient being fitted for artificial dentures by a technician using my method and apparatus of this invention must merely capture the relation of the jaws while at rest, instead of throwing them out of position by biting into or against wax rims.

From impressions made from the mandibular and maxillary ridges, plaster models are made, and from such plaster models base trays of rubber or the like material are made. It is to be understood that these base trays are made from casts of the impressions, and therefore are individually formed, one set for each patient. When

2

the base trays have been made and "washed" out, if desired, with any suitable impression material, the dentist or technician then makes use of my relater apparatus in correctly positioning the trays relative to each other prior to and when mounting them on an articulator, all as will be fully explained and made clear hereinafter. It is to be distinctly understood that the method and apparatus of this invention is utilized prior to the use of the usual articulator, that is, after the case is properly mounted on the articulator by means of my invention, the steps which follow on the articulator are usual and now known and in use in the art.

One of the fundamental purposes of a maxillary mandibular relater is to provide means exteriorly of the patient's mouth for capturing and recording the angular positions assumed by the trays in the mouth of the patient when the jaw muscles are relaxed. The trays are operatively and detachably associated with recording mechanism which must record the positions assumed by the trays when in the mouth and must maintain this record when the trays are detached from the mechanism for removal one at a time from the mouth. This angular relationship record must be maintained, for after removal of the trays from the mouth they are again attached to the recording mechanism and it is essential that they then assume the same relative positions they assumed when in the patient's mouth. Since this positioning record was made when the muscles of the patient's jaw were relaxed a true and accurate record is obtained and accurate occlusion will result in the finished dentures.

While the apparatus disclosed in my aforementioned United States patent is satisfactory and the artificial dentures which are made therewith result in exceedingly accurate occlusion, I have made certain improvements therein which provide an apparatus which may be operated and manipulated by the technician with greater speed and facility, and the possibility of error in setting the device is greatly reduced.

The relater of this invention provides means whereby the angular relationship of the maxillary and mandibular ridges may be captured and recorded with accuracy and with fewer mechanical adjustments than can that which is disclosed in my prior patent.

It is therefor an object of this invention to provide a relater for capturing and recording the angular relation of the maxillary and mandibular ridges of the mouth of a patient for whom artificial dentures are being made, which records

the vertical spacing and the angular or lateral relationships without requiring adjustments by the technician after the trays are mounted in the patient's mouth and the device is operatively associated with the trays.

Another object of my invention is to provide a relater for capturing and recording the angular relation of the maxillary and mandibular ridges of the mouth of a patient for whom artificial dentures are being made, which eliminates the necessity of fine adjustments being made by the technician, but instead provides a plastic material which sets about the recording elements and maintains them in the proper relative angular positions.

A further object of my invention resides in a relater apparatus which in operative position projecting from the patient's mouth requires only one operation by the technician to capture and record the angular relation of the maxillary and mandibular ridges.

Another object of my invention is to provide a relater of this character which eliminates certain adjusting mechanisms so that the operation will be done more rapidly and with greater accuracy and facility than heretofore.

It is also an object of my invention to provide a maxillary mandibular relater which is of relatively simple character which may be economically manufactured.

And yet another object of my invention is to provide a relater of this character which is of lighter weight than those heretofore known in the art.

It is also an object of my invention to provide trays for insertion in the mouth of the patient which are attached to the relater apparatus in a manner causing the least discomfort to the patient while facilitating the handling thereof by the technician.

With the foregoing general objects, features, and results in view, as well as certain others which will be apparent from the following explanation, the invention consists in certain novel features and design, construction, mounting and combination of elements, as will be more fully and particularly referred to and specified hereinafter.

Referring to the accompanying drawings:

Fig. 1 is a view in perspective of the device with the trays in a patient's mouth, the muscles of the jaws being relaxed, and the relater and connecting rods projecting from the trays in position to be operatively associated with the recording mechanism into which the plastic material has been placed.

Fig. 2 is a side view of the device with the trays in position in the patient's mouth, the connecting rods having been placed in the plastic material which is hardening thereabout.

Fig. 3 is a top plan view of the device with the parts in the operative positions illustrated in Fig. 2 of the drawings, with the exception that the patient's mouth in which the base trays would be is not illustrated.

Fig. 4 is a side view of the device after the cement has hardened illustrating the step of disconnecting the connecting rods from the relater rods for removal of the base trays one at a time from the patient's mouth, the patient's mouth not being shown in this view.

Fig. 5 is a view in perspective of the connecting and relater rods in disconnected positions.

Referring to the accompanying drawings, wherein I have illustrated the apparatus which

I have termed a relater, I have used the numeral 1 to designate in its entirety the recording mechanism of the relater apparatus. This recording mechanism is preferably though not necessarily formed of a plastic material and includes an upper clamping jaw 3 and a lower clamping jaw 5 operatively associated together by means of a hinge pin 7 passing through sleeves 9 formed on and extending from the upper and lower jaws. A rearwardly directed handle 11 projects from each clamping jaw, the jaws being urged together by the action of a spring 13. A hook 15 is pivotally fixed on one of the handles 11 for hooking over a projecting pin 17 on the other handle. Thus the jaws may be held apart, as shown in Fig. 1 of the drawings, by hooking the hook 15 over the pin 17, and they may assume clamping position under the spring action, as illustrated in Fig. 2 of the drawings, by releasing the hook from the pin.

The jaws 3 and 5 are formed to provide inner arcuate surfaces, so as to form a pocket or area in each which will hold a plastic substance as will be hereinafter described. The shaping of the jaws is such that in complete clamping position with the front edges in engagement a substantially tubular area is formed by the jaws.

My relater further includes a pair of connecting rods 19 each of which has a ball or substantially spherical member 21 on one end thereof. This spherical member is provided with a grid arrangement consisting of a plurality of grooves 23 on the surface thereof. A neck 25 of reduced diameter relative to the connecting rod connects the spherical member 21 therewith, and at the other end the rod is cut away longitudinally to provide a semi-cylindrical portion having a flat side which is provided with a plurality of transverse and intersecting longitudinal grooves 27. The semi-cylindrical end of each rod is formed with a threaded hole 29 therethrough for threadedly receiving therein a screw 31.

A pair of relater rods 33 are adapted to be detachably fastened to the connecting rods by means of the screws 31. Each relater rod at the forward end thereof is cut away longitudinally to form a semi-cylindrical portion 35 having transverse and intersecting longitudinal ribs 37 and is provided with a threaded hole 39 extending through the semi-cylindrical portion 35. It will be appreciated that a relater rod may be attached to a connecting rod by joining the mating semi-cylindrical portions thereof by means of the screw 31, the ribs 37 seating in the grooves 27. Thus, when so connected a rigid joint will be produced.

A maxillary mandibular relater includes two connecting rods and two relater rods, thus there is a relater rod for detachable attachment to each connecting rod. Each relater rod 33 is provided at one end thereof, that is the end opposed to that having the semi-cylindrical portion 35, with angled feet or attaching members 41 and 43, the angled feet projecting outwardly when the relater rods are in operative positions attached to the connecting rods. Each angled foot is formed to provide flat surfaces for attachment to base plates or trays as will be hereinafter described.

The upper base tray or plate 45 and the lower base tray or plate 47 are made from the impressions which are made of the maxillary mandibular ridges. These trays or plates are adapted to be operatively combined with the relater so that the recording mechanism will capture and record the exact angular positions assumed by

the plates in the mouth of the patient when the jaws are in relaxed condition to thereby truly and accurately dispose the plates in positions in which occlusion in the finished dentures will be natural and realistic.

After the base plates 45 and 47 have been made from the impressions which the dentist has previously made they are attached to the relater rods. Each plate 45 and 47 is formed with a built up thickness providing an attaching section 49. This built up section 49 is formed to the height of the lip line on the opposite side of each plate, so that the one on the upper plate will be on one side and the one on the lower plate will be on the other side, and neither will touch the opposite base tray, the built up sections being formed to project downwardly from the upper plate and upwardly from the lower plate, when the plates are in mouth inserted operative positions. The base plates 45 and 47 are made of any suitable and desirable material having an adhesive quality when heated. Each base plate is attached to its relater rod by heating the built up section and applying the flat surface of the angled attaching foot thereto whereupon a strong connection is made.

With the base plates attached to the relater rods as described it will be recognized that when the plates are disposed in the mouth of the patient the relater rods will extend from opposite corners of the mouth and thus they will in no way interfere with or touch one another nor will they be sufficiently close to make the operation of the screws 31 difficult for the operator of the device. Figs. 1 and 3 of the drawings clearly illustrate the relative positions of the relater rods when the base plates are in mouth inserted operative positions.

In my prior patent the capturing and recording mechanism included various mechanical adjusting and setting means for maintaining the connector rods in the positions they assumed responsive to the positions of the relater rods and base trays. I have now devised a unique recording mechanism eliminating the adjusting and setting mechanism. I now employ a quick setting dental plaster or cement 51 which is put into or between the jaws 3 and 5 of the recording mechanism 1. This quick setting dental cement is adapted to receive the spherical members 21 of the connecting rods while in a plastic state and quickly harden about them to record and maintain their relative positions.

In using my maxillary mandibular relater the dentist or technician having made the upper and lower base plates 45 and 47, respectively, as I have described above, and having attached each of them to a relater rod as described is ready to proceed to capture and record the true angular relation between the plates when they are in the patient's mouth. Since the plates must be removed from the patient's mouth one at a time they must be detached from the recording mechanism and therefor it is of course necessary that the recording mechanism maintain the angular record while the plates are detached therefrom so that they may be again attached thereto after they are removed from the mouth and assume the same positions they had when in the patient's mouth.

With the plates made and the relater rods attached thereto the dentist attaches a connector rod 19 to each relater rod by mating the semicylindrical portions and the ribs and grooves and making a rigid joint therebetween by threading the screw 31 into the aligned holes 29 and 39. When this has been done the plates are inserted in the patient's mouth, one at a time, and dental powder may be used if desired to maintain the plates. With the plates positioned in the patient's mouth the relater rods will project from the corners of the mouth, one from the left side and one from the right side, and since the connector rods are attached to the relater rods the spherical members 21 will be on the ends of the elements which project from the patient's mouth.

With the elements positioned as explained and when the patient has allowed his jaws to assume a normal relaxed position the recording mechanism is brought into play. The dentist opens the jaws 3 and 5 and hooks the hook 15 over pin 17 to maintain them in open cement receiving position. The cement or plaster 51 is then placed between the jaws 3 and 5 of the recording mechanism. When the area between the jaws 3 and 5 is charged with cement the dentist unhooks pin 15 from hook 17 whereupon the recording mechanism is immediately associated with the spherical members 21 which are positioned fully between the jaws 3 and 5 within the cement, the dentist may regulate the clamping pressure of the jaws while the spherical members are being positioned therebetween within the cement. The positions of the plates will be transmitted to the connector rods and the spherical members, thus lateral and longitudinal tilting of the plates is transmitted to the rigidly connected relater and connector rods. A lateral tilting of the trays induces a rotary movement in the relater and connector rods with a corresponding movement of the spherical members in the cement which is still in a plastic condition, while a longitudinal tilting of the trays induces swivelling or oscillatory action on the relater and connector rods with a corresponding movement of the spherical members. It will be apparent that the spherical members may adjust themselves to the proper positions while the cement is plastic and before it hardens. The cement 51 which is preferably a quick setting kind will harden and set about the spherical members and will maintain them and the connecting rods in the positions transmitted to them from the mouth positioned plates. It is to be understood that while the cement or plaster is hardening and setting about the spherical members on the ends of the connector rods to capture and record the positions they assume responsive to the position of the mouth inserted plates, that the plates remain in the mouth with the entire apparatus in operative assembled position as illustrated in Fig. 2 of the drawings.

The diameter of the substantially spherical members is preferably greater than that of the area formed by the jaws 3 and 5 when they are completely closed and the forward edges thereof are abutting. Thus, when the spherical members are in operative position inserted in the cement between the jaws the forward edges will not be in abutting position but will be somewhat spaced apart. If the relative diameters of the spherical members and the internal area defined by the jaws were not as described the pressure of the jaws would not be directly exerted on the spherical members to aid the cement in maintaining the spherical members in properly adjusted positions. By making the spherical members of a diameter sufficiently great to maintain the jaws 3 and 5 apart vertical adjustment of the connector rods is permitted, otherwise neck

25 of the connector rods would engage the forward edges of the jaws and the movement of the rods would thereby be restricted.

Upon hardening of the cement or plaster within the jaws and about the spherical members a unitary, integral monolithic structure results. The spherical members are embedded and anchored in the cement block, they are restrained against movement independent of the cement block and the cement block is completely held within the jaws against movement.

When the cement has hardened the exact relative positions of the plates within the patient's mouth has been captured and recorded. As the plates can only be removed from the mouth one at a time it is necessary to detach them from the connector rods which is done by removing the screws 31. Such removal of the plates from the apparatus by detachment of the relater rods from the connector rods does not result in losing the mandibular maxillary relationship for such relationship is contained in the position of the connector rods.

When the operator has removed the plates from the patient's mouth plaster casts are poured into the plates and then the plates with the casts therein are remounted on the relater apparatus. As the relative position of the plates is contained in the setting of the connector rods the plates when remounted thereon will automatically assume such position, which will represent the true normal relationship of the mandibular and maxillary ridges when the patient is at rest. The case is now ready to be mounted on the usual articulator which is done while the case (that is the plates with the casts therein) is mounted on the relater apparatus. Thus the proper positioning of the case is transferred from the case on the relater to the case on the articulator. After being mounted and secured on the articulator the usual method of setting up the teeth is followed.

From my description of this method and apparatus it will be clear that the vertical spacing of the mandibular and maxillary ridges of the mouth is recorded by the vertical angles at which the connector rods project from the cement 51, and that the lateral and longitudinal tilting of the ridges is recorded in the swivelled position of the spherical members in the cement. Hence the plates may be detached from the connector rods and removed from the mouth after the cement has hardened to record the plate positions when in the mouth, and then the plates may be again attached thereto and the plates will assume their former positions. By the construction of the mating portions of the relater and connector rods it will be evident that no relative rotary or radial movement is possible and therefore the point and position of attachment will be exactly the same as the point and position of detachment.

What I claim is:

1. An apparatus of the class described, comprising base plates for insertion and positioning in the mouth of a patient, separable connecting members attached to said plates and extending exteriorly of the patient's mouth, when the plates are therein, and recording mechanism for capturing and recording the positions assumed by the connecting members responsive to the positions of the plates in the mouth of the patient, said recording mechanism including a receiving and confining means for a hardenable plastic substance, and said means adapted to receive therein in the plastic substance the ends of the connecting members for capturing and recording the positions thereof when the plastic substance hardens.

2. An apparatus of the class described, comprising base plates for insertion and positioning in the mouth of a patient, separable connecting members attached to said plates and extending exteriorly of the patient's mouth when the plates are therein, and recording mechanism for capturing and recording the positions assumed by the connecting members responsive to the positions of the plates in the mouth of the patient, said recording mechanism including a pair of clamping jaws providing an area therebetween for receiving and confining a hardenable plastic substance and for receiving and exerting pressure on the ends of the connecting members disposed therebetween within the plastic substance for capturing and recording the positions of the connecting members when the plastic substance hardens.

3. An apparatus of the class described, comprising base plates for insertion and positioning in the mouth of a patient, separable connecting members attached to said plates and extending exteriorly of the patient's mouth when the plates are therein, and recording mechanism for capturing and recording the positions assumed by the connecting members responsive to the positions of the plates in the mouth of the patient, said recording mechanism including a pair of clamping jaws and means operable to releasably maintain the jaws in separated non-clamping positions, said jaws providing an area therebetween for receiving and confining a hardenable plastic substance and for receiving and directly exerting pressure on the ends of the connecting members disposed therebetween within the plastic substance for capturing and recording the positions of the connecting members when the plastic substance hardens.

4. An apparatus of the class described, comprising base plates for insertion and positioning in the mouth of a patient, separable connecting members attached to said plates and extending exteriorly of the patient's mouth when the plates are therein, and recording mechanism for capturing and recording the positions assumed by the connecting members responsive to the positions of the plates in the mouth of the patient, said recording mechanism including a pair of clamping jaws defining a substantially tubular area when the jaws are in clamping position for receiving and confining a hardenable plastic substance therein and said connecting members extended into the plastic substance when in a plastic condition and adapted to be maintained in said assumed positions within the plastic substance when it hardens.

5. An apparatus of the class described, comprising base plates for insertion and positioning in the mouth of a patient, separable connecting members attached to said plates and extending exteriorly of the patient's mouth when the plates are therein, said connecting members provided with substantially spherical anchoring elements on the extended ends thereof, and recording mechanism for capturing and recording the positions assumed by the connecting members responsive to the positions of the plates in the mouth of the patient, said recording mechanism including a pair of clamping jaws defining a substantially tubular area when the jaws are in clamping position, the tubular area being of less diameter than the diameter of said spherical members, area defined by the jaws adapted to

receive and confine a hardenable plastic substance therein and said substantially spherical anchoring elements disposed in the plastic substance when in a plastic condition and adapted to be maintained in said assumed positions within the plastic substance when it hardens.

6. An apparatus of the class described, comprising an upper base plate and a lower base plate, each adapted to be inserted in the mouth of a patient for positioning therein in conformity with the angular relation of the maxillary mandibular ridges of the mouth, and a pair of separable connecting members for connecting said plates to a recording mechanism for capturing and recording the positions assumed by said connecting members responsive to the position of said plates in the patient's mouth, each of said members having a flat surfaced angled foot on one end thereof, said feet extending in opposite directions, and said upper plate having a flat built up section on one side and said lower plate having a flat built up section on the opposite side, an angled foot of each connecting member attached to a built up section so that the connecting members extend from the mouth positioned plates exteriorly of the mouth, and said recording mechanism including a plastic substance holding and confining means adapted to receive a hardenable plastic substance therein, and said connecting members extended into the hardenable plastic substance when in a plastic

condition and adapted to be maintained in said assumed positions within the plastic substance when it hardens.

7. Apparatus for capturing and recording the positions assumed by connecting members which are connected to and extend from and are responsive to the positions of base plates within a patient's mouth, including a receiving and confining means defining a tubular area for receiving a hardenable plastic substance, said means adapted to receive therein the ends of the connecting members in the plastic substance for capturing and recording the positions thereof when the plastic substance hardens.

JAMES C. TAYLOR, JR.

REFERENCES CITED

The following references are of record in the file of this patent:

UNITED STATES PATENTS

Number	Name	Date
1,830,248	Smith	Nov. 3, 1931
2,220,734	Shanahan	Nov. 5, 1940
2,299,285	Taylor	Oct. 20, 1942
2,334,898	Bigger et al.	Nov. 23, 1943

FOREIGN PATENTS

Number	Country	Date
615,886	France	Oct. 19, 1926