US 20160264874A1

(19) United States

(12) Patent Application Publication

(10) Pub. No.: US 2016/0264874 A1

(43) Pub. Date: Sep. 15, 2016

NARAYANASWAMY et al.

(54) **ROBUST INTEGRATED PROCESS FOR CONVERSION OF WASTE PLASTICS TO FINAL PETROCHEMICAL PRODUCTS**

(71) Applicant: **Sabic Global Technologies, B.V.**, BERGEN OP ZOOM (NL)

(72) Inventors: **Ravichander NARAYANASWAMY**, Bengaluru (IN); **Krishna Kumar RAMAMURTHY**, Bengaluru (IN); **Alexander STANISLAUS**, Bangalore (IN); **Mohammad JAVEED**, Bengaluru (IN)

(21) Appl. No.: **15/085,445**

(22) Filed: **Mar. 30, 2016**

Related U.S. Application Data

(63) Continuation of application No. PCT/IB2016/051137, filed on Mar. 1, 2016.

(60) Provisional application No. 62/201,676, filed on Aug. 6, 2015.

(30) **Foreign Application Priority Data**

Mar. 10, 2015 (IN) 1171CHE2015

Publication Classification

(51) **Int. Cl.**

C10G 1/10	(2006.01)
C10G 69/06	(2006.01)
C10B 53/07	(2006.01)
C10G 1/00	(2006.01)

(52) **U.S. Cl.**

CPC ***C10G 1/10*** (2013.01); ***C10G 1/002*** (2013.01); ***C10G 69/06*** (2013.01); ***C10B 53/07*** (2013.01)

(57) **ABSTRACT**

A robust integrated process for the conversion of waste plastics to high value products. The robust integrated process allows for operation with a single hydroprocessing reactor which provides simultaneous hydrogenation, dechlorination, and hydrocracking of components of a hydrocarbon stream to specifications which meet steam cracker requirements, with the option to further dechlorinate the treated hydrocarbon stream in a polishing zone.

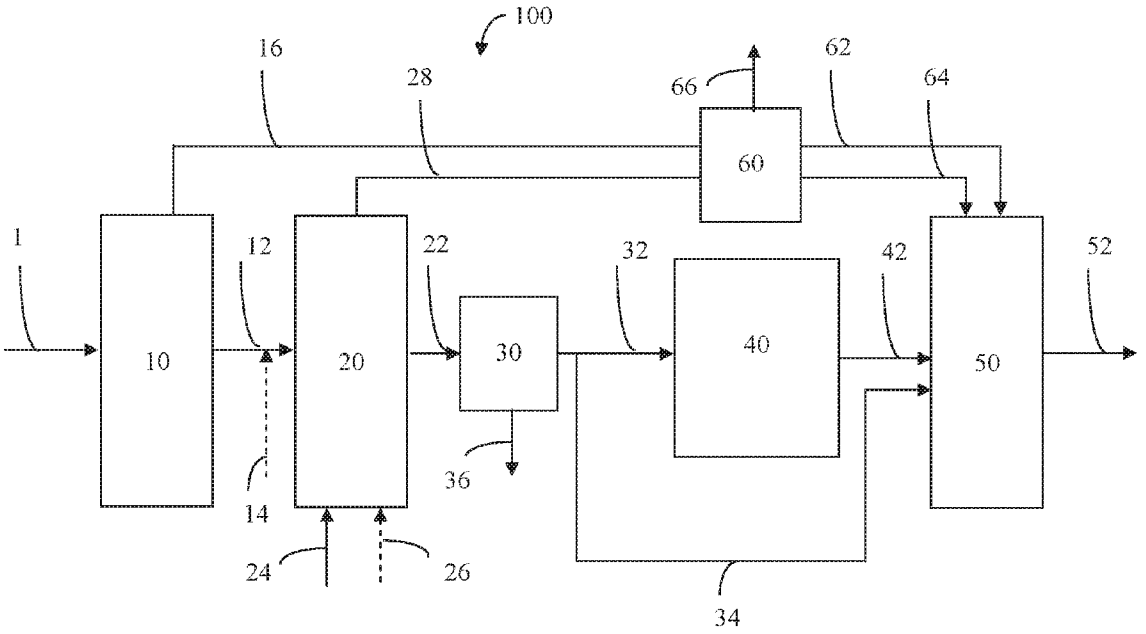

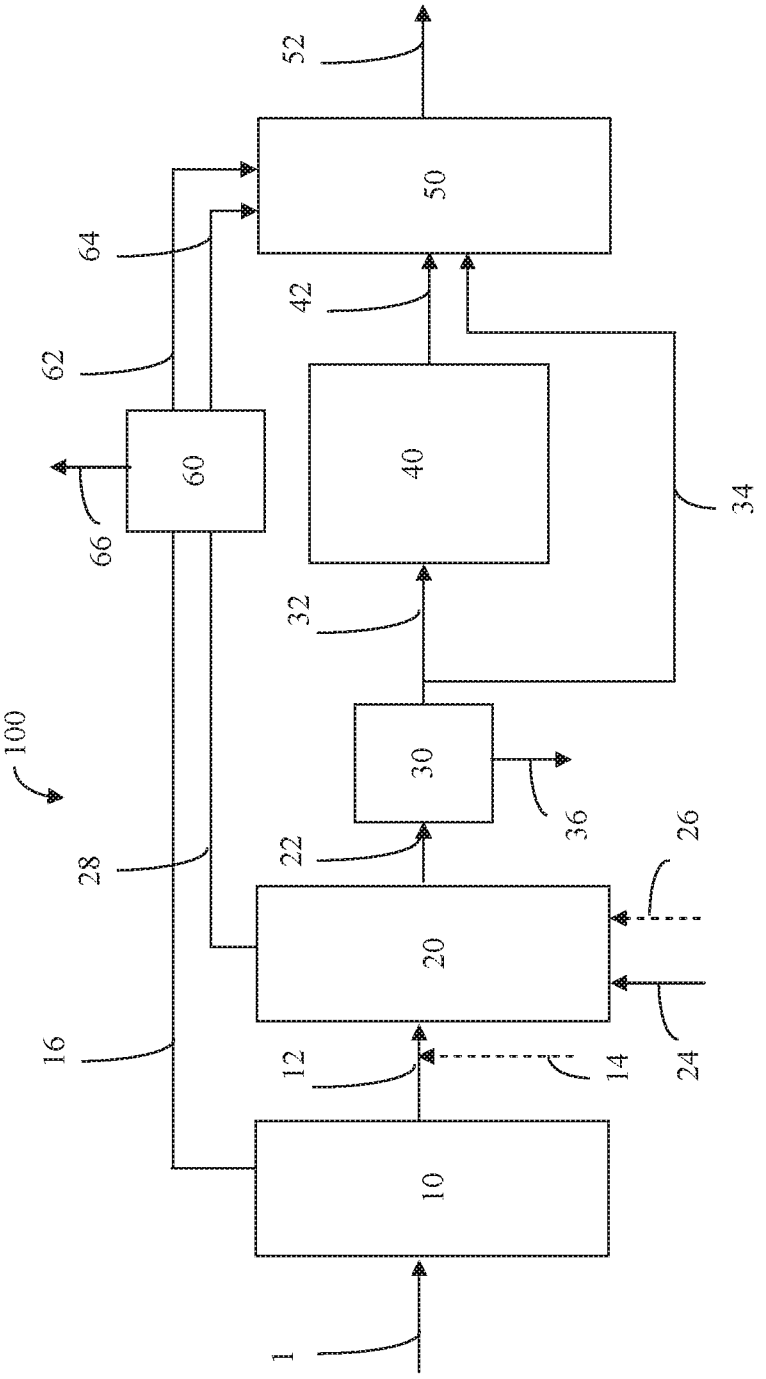

FIG. 1

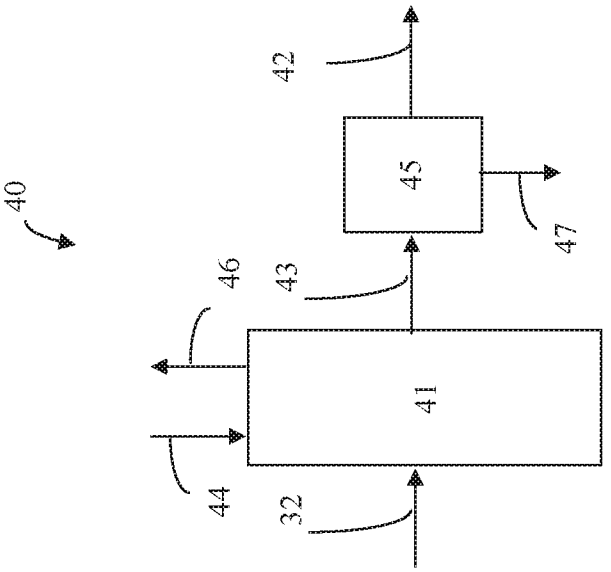

FIG. 2

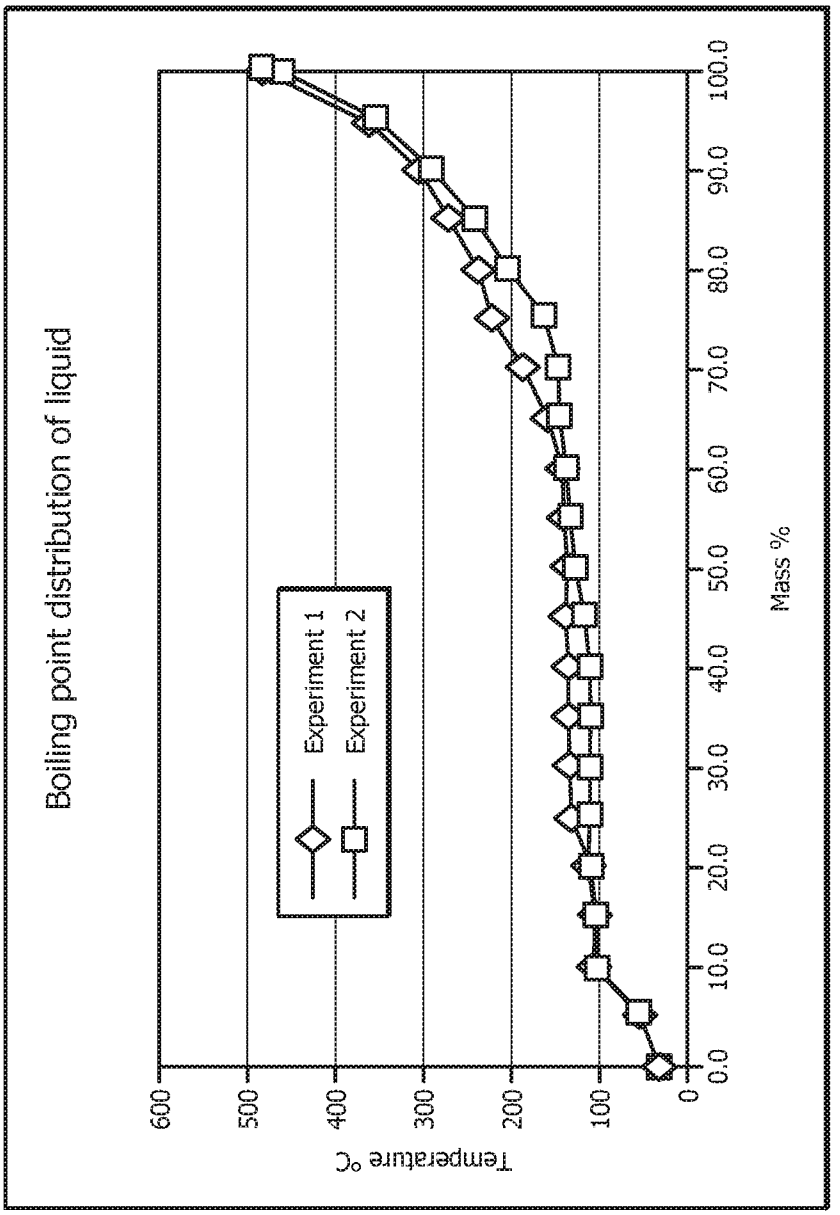
Boiling point distribution of liquid
Experiment 1
Experiment 2
Temperature °C
600
500
400
300
200
100
0
0.0
10.0
20.0
30.0
40.0
50.0
60.0
70.0
80.0
90.0
100.0
Mass %

FIG. 3

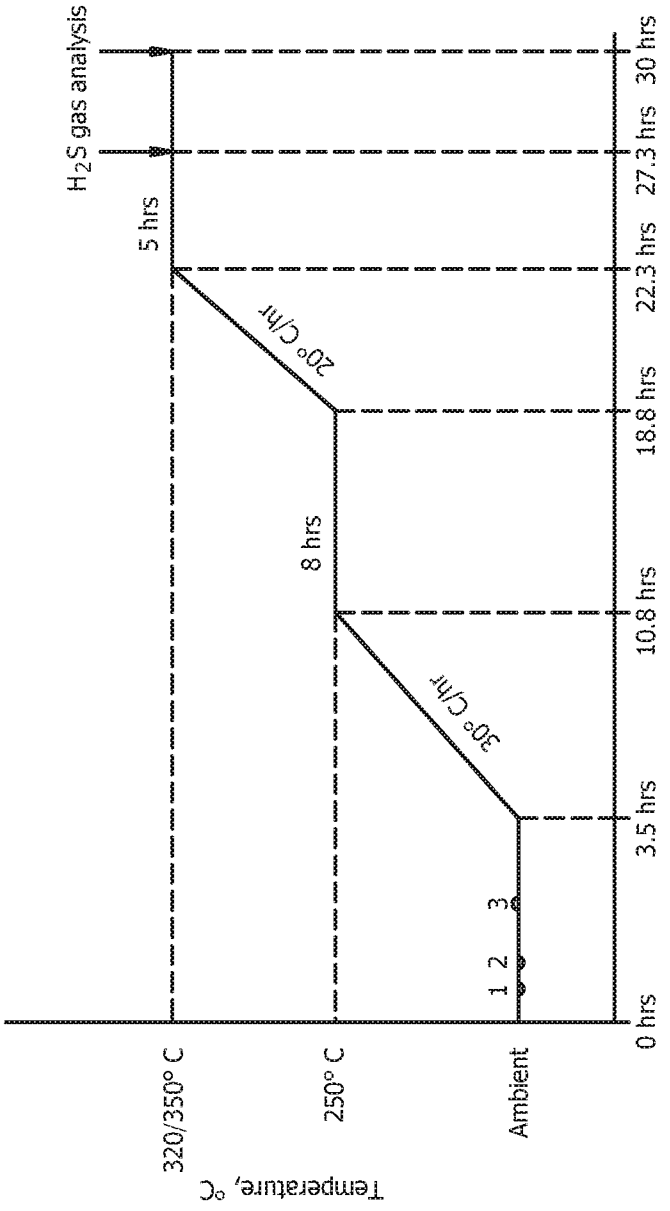

1. H_2 purge for 30-60 mins at 40-60 barg at ambient temperature
2. Stop H_2
3. Pump sulfiding feed for 3hrs at $3hr^{-1}$ WHSV without H_2 purge at 40-60 barg at ambient temperature

FIG. 4

ROBUST INTEGRATED PROCESS FOR CONVERSION OF WASTE PLASTICS TO FINAL PETROCHEMICAL PRODUCTS

CROSS REFERENCE TO RELATED APPLICATIONS

[0001] The present application is a continuation of and claims priority to International Application No. PCT/IB2016/051137 filed Mar. 1, 2016, entitled "A Robust Integrated Process for Conversion of Waste Plastics to Final Petrochemical Products," which claims priority to U.S. Provisional Application No. 62/201,676 filed on Aug. 6, 2015, entitled "A Robust Integrated Process for Conversion of Waste Plastics to Final Petrochemical Products," and Indian Provisional Application No. 1171/CHE/2015 filed Mar. 10, 2015 entitled "A Robust Integrated Process for Conversion of Waste Plastics to Final Petrochemical Products," which applications are incorporated by reference herein in their entirety.

TECHNICAL FIELD

[0002] The present disclosure relates to the treatment of hydrocarbon streams resulting from pyrolysis of waste plastics for use in downstream processes.

BACKGROUND

[0003] Waste plastics contain polyvinylchloride (PVC). Through a pyrolysis process, waste plastics can be converted to gas and liquid products. These liquid products contain paraffins, i-paraffins (iso-paraffins), olefins, naphthenes, and aromatic components along with organic chlorides in concentrations of hundreds of ppm. As such, the liquid products of a pyrolysis process (pyrolysis oils) can be used as a feedstock for steam crackers partly replacing naphtha used in these units. However, pyrolysis oils do not meet the steam cracker feed specification requirements of chloride levels less than 3 ppm, olefin content less than 1 wt %, and boiling end point requirements of 370° C.

SUMMARY

[0004] Disclosed herein is a process for converting waste plastics to a high value product comprising converting the waste plastics to a hydrocarbon stream in a liquid phase, wherein the hydrocarbon stream comprises one or more chloride compounds in a concentration of 5 ppm or more based on a total weight of the hydrocarbon stream, contacting the hydrocarbon stream with a first hydroprocessing catalyst in the presence of hydrogen to yield a first hydrocarbon product comprising C_1 to C_4 gases and C_5+ liquid hydrocarbons, recovering the C_5+ liquid hydrocarbons in a treated hydrocarbon stream from the first hydrocarbon product, wherein the treated hydrocarbon stream comprises the one or more chloride compounds in a concentration of 3 to 5 ppm based on a total weight of the treated hydrocarbon stream, dechlorinating the treated hydrocarbon stream to yield a polished hydrocarbon stream comprising one or more chloride compounds in a concentration of less than 3 ppm based on a total weight of the polished hydrocarbon stream, and feeding the treated hydrocarbon stream or polished hydrocarbon stream to a steam cracker to yield the high value product, wherein the treated hydrocarbon stream or polished hydrocarbon stream meets steam cracker feed requirements for chloride content, olefin content, and boiling end point.

BRIEF DESCRIPTION OF THE DRAWINGS

[0005] FIG. **1** illustrates a hydroprocessing system for converting plastic waste to a high value product by simultaneously dechlorinating chloride compounds, hydrogenating olefins, and hydrocracking heavy hydrocarbon molecules contained in a hydrocarbon stream which contains a pyrolysis oil to levels suitable for introduction to a steam cracker.

[0006] FIG. **2** illustrates an embodiment of a polishing zone in the hydroprocessing system.

[0007] FIG. **3** is a graph of the boiling point distribution for a liquid product of a low severity pyrolysis process, showing temperature versus mass percent.

[0008] FIG. **4** is a graph of a staged catalyst sulphiding protocol, showing temperature versus time.

DETAILED DESCRIPTION

[0009] Other than in the operating examples or where otherwise indicated, all numbers or expressions referring to quantities of ingredients, reaction conditions, and the like, used in the specification and claims are to be understood as modified in all instances by the term "about." Various numerical ranges are disclosed herein. Because these ranges are continuous, they include every value between the minimum and maximum values. The endpoints of all ranges reciting the same characteristic or component are independently combinable and inclusive of the recited endpoint. Unless expressly indicated otherwise, the various numerical ranges specified in this application are approximations. The endpoints of all ranges directed to the same component or property are inclusive of the endpoint and independently combinable. The term "X or more" means that the named component is present in an amount of the value X, and values which are more than X.

[0010] The terms "a," "an," and "the" do not denote a limitation of quantity, but rather denote the presence of at least one of the referenced item. As used herein the singular forms "a," "an," and "the" include plural referents.

[0011] As used herein, "combinations thereof" is inclusive of one or more of the recited elements, optionally together with a like element not recited, e.g., inclusive of a combination of one or more of the named components, optionally with one or more other components not specifically named that have essentially the same function. As used herein, the term "combination" is inclusive of blends, mixtures, alloys, reaction products, and the like.

[0012] Reference throughout the specification to "an embodiment," "embodiments," "another embodiment," "other embodiments," "alternative embodiments," "additional embodiments," "some embodiments," and so forth (e.g., the use of "additionally" and/or "alternatively" in the context of describing one or more embodiments), means that a particular element (e.g., feature, structure, property, and/or characteristic) described in connection with the embodiment is included in at least an embodiment described herein, and may or may not be present in other embodiments. In addition, it is to be understood that the described element(s) can be combined in any suitable manner in the various embodiments.

[0013] Disclosed herein are embodiments of a process for converting waste plastics to a high value product. Embodiments of the process include converting the waste plastics to a hydrocarbon stream in a liquid phase, converting the waste plastics to a pyrolysis light gas stream containing C_1 to C_4 hydrocarbons, contacting the hydrocarbon stream with a

hydroprocessing catalyst in the presence of hydrogen (H_2) to yield a hydrocarbon product, recovering a treated hydrocarbon stream comprising C5+ hydrocarbons from the hydrocarbon product, dechlorinating the treated hydrocarbon stream to yield a polished hydrocarbon stream, recovering a hydroprocessed light gas stream from the hydrocarbon product, feeding the treated hydrocarbon stream to a steam cracker to yield the high value product, feeding the polished hydrocarbon stream to a steam cracker to yield the high value product, feeding the pyrolysis light gas stream to the steam cracker, feeding the hydroprocessed light gas stream to the steam cracker, or combinations thereof. The treated hydrocarbon stream or polished hydrocarbon stream meets steam cracker feed requirements. The pyrolysis light gas stream may be fed to the steam cracker directly, or after treating the pyrolysis light gas stream in a scrubbing unit to yield a treated pyrolysis light gas stream which is subsequently fed to the steam cracker. The hydroprocessed light gas stream may be fed to the steam cracker directly, or after treating the hydroprocessed light gas stream in a scrubbing unit to yield a treated hydroprocessed light gas stream which is subsequently fed to the steam cracker. Converting the waste plastics to a hydrocarbon stream in a liquid phase and converting the waste plastics to a pyrolysis light gas stream containing C_1 to C_4 hydrocarbons may occur simultaneously via pyrolysis of the waste plastics.

[0014] Embodiments of the process are described in more detail with reference to FIG. **1**. FIG. **1** illustrates a hydroprocessing system **100** for converting plastic waste to a high value product by simultaneously dechlorinating chloride compounds, hydrogenating olefins, and hydrocracking heavy hydrocarbon molecules contained in a hydrocarbon stream **12** which contains a pyrolysis oil (e.g., plastic pyrolysis oil, tire pyrolysis oil) to levels suitable for introduction to a steam cracker **50**. The system **100** includes a pyrolysis unit **10**, a hydroprocessing reactor **20**, a separator **30**, a polishing zone **40**, and a steam cracker **50**. Waste plastic is either placed in the pyrolysis unit **10** or fed to the pyrolysis unit **10** via waste plastic stream **1**. In the pyrolysis unit **10**, the plastic waste stream is converted via pyrolysis reactions to pyrolysis gases (e.g., C_1 to C_4 gases) and a liquid pyrolysis oil. The pyrolysis gases flow from the pyrolysis unit **10** via a pyrolysis light gas stream **16** directly to the steam cracker **50**, or to a scrubbing unit **60** and then the steam cracker **50**. The liquid pyrolysis oil flows from the pyrolysis unit **10** via hydrocarbon stream **12**. The hydrocarbon stream **12** feeds to the hydroprocessing reactor **20**, and the reaction product effluent of the hydroprocessing reactor **20** flows from the hydroprocessing reactor **20** in the hydrocarbon product stream **22** to the separator **30**. In separator **30**, a treated product (e.g., in gas or liquid form) is recovered from the hydrocarbon product stream **22** and flows from the separator **30** via treated hydrocarbon stream **32**, with one or more of sulphur-containing gases and chlorine-containing gases flowing from the separator **30** in hydroprocessed light gas stream **36**. C_1 to C_4 hydrocarbon gases which are generated in the hydroprocessing reactor **20** may flow directly to a separator **30**, where the C_1 to C_4 hydrocarbon gases are recovered in a hydroprocessed light gas stream **36** for flow directly to the steam cracker **40**, to a scrubbing unit **50**, or a combination of direct flow to the steam cracker **40** and flow to the scrubbing unit **50** (e.g., a portion of the pyrolysis light gas stream bypasses the scrubbing unit).

[0015] In embodiments where the chloride content of the treated hydrocarbon product meets steam cracker requirements, the treated hydrocarbon product in the treated hydrocarbon stream **32** may flow directly (e.g., without any separations or fractionations of the treated hydrocarbon stream **32**) via bypass stream **34** to a steam cracker **50**, from which high value products flow in stream **52**. In embodiments where the chloride content of the treated hydrocarbon product does not meet steam cracker feed requirements, the treated hydrocarbon product may flow in the treated hydrocarbon stream **32** to polishing zone **40**, where further dechlorination occurs to yield the polished hydrocarbon stream **42**. The polished hydrocarbon stream **42** may then flow directly (e.g., without any separations or fractionations of the polished hydrocarbon stream **42**) to the stream cracker **50**, from which the high value products flow in stream **52**.

[0016] Waste plastics which are loaded into or fed to the pyrolysis unit **10** via waste plastic stream **1** may include post-consumer waste plastics. Examples of waste plastics which can be used include chlorinated plastics (e.g., chlorinated polyethylene), polyvinylchloride, non-chlorinated plastics (e.g., polyethylene, polystyrene, polypropylene, copolymers, etc.), or mixtures thereof. Waste plastics as disclosed herein also include used tires.

[0017] Waste plastics in the pyrolysis unit **10** are subjected to a pyrolysis process to convert the waste plastics to one or more pyrolysis oils which flow from the pyrolysis unit **10** via hydrocarbon stream **12**. The pyrolysis processes in the pyrolysis unit **10** may be low severity or high severity. Low severity pyrolysis processes may occur at a temperature of 250° C. to 450° C., may produce pyrolysis oils rich in mono- and diolefins as well as a significant amount of aromatics, and may include chloride compounds in amounts which cause the hydrocarbon stream **12** to have the chloride compound concentrations disclosed herein. High severity pyrolysis processes may occur at a temperature of 450° C. to 750° C. and may produce pyrolysis oils rich in aromatics. The liquid product of the high severity processes may include chloride compounds which cause the hydrocarbon stream **12** to have the chloride compound concentrations disclosed herein.

[0018] In embodiments, the pyrolysis unit **10** may be one or more vessels configured to convert waste plastics into gas phase and liquid phase products (e.g., simultaneously). The one or more vessels may contain one or more beds of inert material or pyrolysis catalyst comprising sand, zeolite, or combinations thereof. Generally, the pyrolysis catalyst is capable of transferring heat to the components subject to the pyrolysis process in the pyrolysis unit **10**. In an embodiment where the pyrolysis unit **10** is two vessels, the pyrolysis process may be divided into a first stage which is performed in the first vessel and in a second stage fluidly connected downstream of the first stage which is performed in the second vessel. The first stage may utilize thermal cracking of the waste plastics, and the second stage may utilize catalytic cracking of the waste plastics to yield the hydrocarbon stream **12** flowing from the second stage. Alternatively, the first stage may utilize catalytic cracking of the waste plastics, and the second stage may utilize thermal cracking of the waste plastics to yield the hydrocarbon stream **12** flowing from the second stage.

[0019] In additional or other embodiments, the pyrolysis unit **10** may include one or more equipment configured to convert waste plastics into gas phase and liquid phase products. The one or more equipment may or may not contain any inert material or pyrolysis catalyst as described above. Examples of such equipment include one or more of heated

extruders, heated rotating kiln, heated tank-type reactors, empty heated vessels, enclosed heated surfaces where plastic flows down along the wall and cracks, vessels surrounded by ovens or furnaces or other equipment offering a heated surface to assist in cracking.

[0020] In one or more embodiments of the pyrolysis unit **10**, a head space purge gas is utilized in all or a portion of the pyrolysis stage(s) (conversion of waste plastics to a liquid phase and/or gas phase products) to enhance cracking of plastics, produce valuable products, provide a feed for steam cracking, or combinations thereof. The head space purge gas may include can utilize hydrogen (H_2), nitrogen (N_2), steam, product gases, or combinations thereof. The use of a head space purge gas assists in the dechlorination in the pyrolysis unit **10**. The use of hydrogen in the pyrolysis unit **10** has beneficial effects of i) reducing the coke lay down as a result of cracking, ii) keeps catalyst used (if any) in the process in an active condition, iii) improves removal of chloride from stream **1** such that the hydrocarbon stream **12** from pyrolysis unit **10** is substantially dechlorinated with respect to waste plastic stream **1** which minimizes the chloride removal requirement in hydroprocessing reactor **20**, iv) reduces diolefins in hydrocarbon stream **12**, v) helps operate the pyrolysis unit **10** at reduced temperatures for same levels of conversion of waste plastic stream **1** in the pyrolysis unit **10**, or combinations of i)-v).

[0021] An example of a pyrolysis process for waste plastics is disclosed in U.S. Pat. No. 8,895,790, which is incorporated by reference in its entirety. Another example of a pyrolysis process is disclosed in U.S. Provisional Patent Application No. 62/025,762, titled "Upgrading Hydrogen Deficient Streams Using Hydrogen Donor Streams in a Hydropyrolysis Process," filed Jul. 17, 2014, which is incorporated by reference in its entirety.

[0022] The hydrocarbon stream **12** generally includes one or more pyrolysis oils (e.g., plastic pyrolysis oil, tire pyrolysis oil). In embodiments, the hydrocarbon stream **12** may include one or more pyrolysis oils as described above which is blended with a heavier oil (e.g., a naphtha or diesel, via spiking stream **14**).

[0023] In an embodiment wherein the hydrocarbon stream **12** does not contain the one or more sulphides in the concentrations disclosed herein, the hydrocarbon stream **12** may be spiked with the one or more sulphides, via a spiking stream **14** (discussed in more detail below).

[0024] Examples of the components which may be included in the hydrocarbon stream **12** include paraffins (n-paraffin, i-paraffin, or both), olefins, naphthenes, aromatic hydrocarbons, or combinations thereof. When the one or more hydrocarbons includes all the listed hydrocarbons, the group of hydrocarbons may be collectively referred to as a PONA feed (paraffin, olefin, naphthene, aromatics) or PIONA feed (n-paraffin, paraffin, olefin, naphthene, aromatics).

[0025] Any paraffin may be included in the hydrocarbon stream **12**. Examples of paraffins which may be included in the hydrocarbon stream **12** include, but are not limited to, C_1 to C_{22} n-paraffins and i-paraffins. In an embodiment, the concentration of paraffins in the hydrocarbon stream **12** may be less than 10 wt % based on the total weight of the hydrocarbon stream **12**. Alternatively, the concentration of paraffins in the hydrocarbon stream **12** may be 10 wt %, 20 wt %, 30 wt %, 40 wt %, 50 wt %, 60 wt %, or more based on the total weight of the hydrocarbon stream **12**. While embodiments include paraffins of carbon numbers up to 22, the disclosure is not limited to carbon number **22** as an upper end-point of the suitable range of paraffins, and the paraffins can include higher carbon numbers, e.g., 22, 23, 24, 25, 26, 27, 28, 29, 30, 31, 32, 33, 34, 35, 36, 37, 38, 39, 40, and higher. In embodiments, at least a portion of the paraffins in the hydrocarbon stream **12** comprises at least a portion of the heavy hydrocarbon molecules.

[0026] Any olefin may be included in the hydrocarbon stream **12**. Examples of olefins which may be included in hydrocarbon stream **12** include, but are not limited to, C_2 to C_{10} olefins and combinations thereof. In an embodiment, the concentration of olefins in the hydrocarbon stream **12** may be less than 10 wt % based on the total weight of the hydrocarbon stream **12**. Alternatively, the concentration of olefins in the hydrocarbon stream **12** may be 10 wt %, 20 wt %, 30 wt %, 40 wt % or more based on the total weight of the hydrocarbon stream **12**. In embodiments, at least a portion of the one or more olefins in the hydrocarbon stream **12** comprise at least a portion of the heavy hydrocarbon molecules. Alternatively, none of the heavy hydrocarbon molecules in the hydrocarbon stream **12** are olefins. While embodiments include olefins of carbon numbers up to 10, the disclosure is not limited to carbon number **10** as an upper end-point of the suitable range of olefins, and the olefins can include higher carbon numbers, e.g., 11, 12, 13, 14, 15, 16, 17, 18, 19, 20, 21, 22, 23, 24, 25, 26, 27, 28, 29, 30, and higher.

[0027] In an embodiment, the hydrocarbon stream **12** comprises no olefins.

[0028] Any naphthene may be included in the hydrocarbon stream **12**. Examples of naphthenes include, but are not limited to, cyclopentane, cyclohexane, cycloheptane, and cyclooctane. In an embodiment, the concentration of naphthenes in the hydrocarbon stream **12** may be less than 10 wt % based on the total weight of the hydrocarbon stream **12**. Alternatively, the concentration of naphthenes in the hydrocarbon stream **12** may be 10 wt %, 20 wt %, 30 wt %, 40 wt % or more based on the total weight of the hydrocarbon stream **12**. While embodiments include naphthenes of carbon numbers up to 8, the disclosure is not limited to carbon number 8 as an upper end-point of the suitable range of naphthenes, and the naphthenes can include higher carbon numbers, e.g., 9, 10, 11, 12, 13, 14, 15, 16, 17, 18, 19, 20, 21, 22, 23, 24, 25, 26, 27, 28, 29, 30, and higher. In embodiments, at least a portion of the naphthenes in the hydrocarbon stream **12** comprise at least a portion of the heavy hydrocarbon molecules.

[0029] Any aromatic hydrocarbon may be included in the hydrocarbon stream **12**. Aromatic hydrocarbons suitable for use in the hydrocarbon stream **12** include, but are not limited to, benzene, toluene, xylenes, ethyl benzene, or combinations thereof. In an embodiment, the concentration of aromatic hydrocarbons in the hydrocarbon stream **12** may be less than 10 wt % based on the total weight of the hydrocarbon stream **12**. Alternatively, the concentration of aromatic hydrocarbons in the hydrocarbon stream **12** may be 10 wt %, 20 wt %, 30 wt %, 40 wt % or more based on the total weight of the hydrocarbon stream **12**. While embodiments include aromatic hydrocarbons of carbon numbers up to 8, the disclosure is not limited to carbon number 8 as an upper end-point of the suitable range of aromatic hydrocarbons, and the aromatic hydrocarbons can include higher carbon numbers, e.g., 9, 10, 11, 12, 13, 14, 15, 16, 17, 18, 19, 20, 21, 22, 23, 24, 25, 26, 27, 28, 29, 30, and higher. In an embodiment, the aromatic hydro-

carbons carbon number is as high as 22. In embodiments, at least a portion of the aromatics in the hydrocarbon stream **12** comprise at least a portion of the heavy hydrocarbon molecules.

[0030] In an embodiment, the hydrocarbon stream **12** comprises no aromatic hydrocarbons.

[0031] As discussed herein, embodiments of the processes disclosed herein contemplate hydrocracking of molecules, and in particular, heavy hydrocarbon molecules of the hydrocarbon stream **12**. As such, it is contemplated that at least a portion of the pyrolysis oils comprises heavy hydrocarbon molecules (e.g., also referred to as heavy ends of the pyrolysis oils). Hydrocracking of the heavy ends of the pyrolysis oils to meet steam cracker **50** specifications is contemplated. In an embodiment, the concentration of heavy hydrocarbon molecules in the hydrocarbon stream **12** may be less than 10 wt % based on the total weight of the hydrocarbon stream **12**. Alternatively, the concentration of the heavy hydrocarbon molecules in the hydrocarbon stream **12** may be 10 wt % to 90 wt % based on the total weight of the hydrocarbon stream **12**. As described above, the heavy hydrocarbon molecules may include paraffins, i-paraffins, olefins, naphthenes, aromatic hydrocarbons, or combinations thereof. In embodiments, the heavy hydrocarbon molecules may include C_{16} and larger hydrocarbons. Greater than 5, 10, 15, 20, 25, 30 wt % or more of the heavy hydrocarbon molecules in the hydrocarbon stream **12** is hydrocracked when the hydrocarbon stream **12** is contacted with the hydroprocessing catalyst in the hydroprocessing reactor **20**. In an embodiment, the hydrocarbon stream **12** may have 2 wt % or less in a liquid phase which boils above 370° C.

[0032] Chloride compounds which may be included in the hydrocarbon stream **12** include, but are not limited to, aliphatic chlorine-containing hydrocarbons, aromatic chlorine-containing hydrocarbons, and other chlorine-containing hydrocarbons. Examples of chlorine-containing hydrocarbons include, but are not limited to, 1-chlorohexane ($C_6H_{13}Cl$), 2-chloropentane ($C_5H_{11}Cl$), 3-chloro-3-methyl pentane ($C_6H_{13}Cl$), (2-chloroethyl) benzene (C_8H_9Cl), chlorobenzene (C_6H_5Cl), or combinations thereof. The concentration of chloride compounds in the hydrocarbon stream **12** may be 5 ppm, 6 ppm, 7 ppm, 8 ppm, 9 ppm, 10 ppm, 15 ppm, 20 ppm, 30 ppm, 40 ppm, 50 ppm, 100 ppm, 200 ppm, 300 ppm, 400 ppm, 500 ppm, 600 ppm, 700 ppm, 800 ppm, 900 ppm, 1,000 ppm, 1,100 ppm, 1,200 ppm, 1,300 ppm, 1,400 ppm, 1,500 ppm, 1,600 ppm, 1,700 ppm, 1,800 ppm, 1,900 ppm, 2,000 ppm or more based on the total weight of the hydrocarbon stream **12**.

[0033] Sulphides which may be included in the hydrocarbon stream **12** include sulphur-containing compounds. For example, a sulphiding agent such as dimethyl disulphide ($C_2H_6S_2$), dimethyl sulphide (C_2H_6S), mercaptans (R—SH), carbon disulphide (CS_2), hydrogen sulphide (H_2S), or combinations thereof may be used as the sulphide in the hydrocarbon stream **12**.

[0034] In an embodiment, one or more sulphides (e.g., dimethyl disulphide ($C_2H_6S_2$), dimethyl sulphide (C_2H_6S), mercaptans (R—SH), carbon disulphide (CS_2), hydrogen sulphide (H_2S), or combinations thereof) are added to the hydrocarbon stream **12** (e.g., the hydrocarbon stream **12** is "spiked" with one or more sulphides), for example, via a spiking stream **14**, before the hydrocarbon stream **12** is introduced to the hydroprocessing reactor **20**. In such embodiments, the one or more sulphides are added to the hydrocarbon stream **12** in an amount such that a sulphur content of the hydrocarbon stream **12**, after sulphide addition, is about 0.5 wt %, 1 wt %, 1.5 wt %, 2 wt %, 2.5 wt %, 3 wt %, 3.5 wt %, 4 wt %, 4.5 wt %, 5 wt % or more based on the total weight of the hydrocarbon stream **12**. In embodiments, the spiking stream **14** may include components tailored for spiking such as hexadecane and dimethyl disulphide; alternatively, the spiking stream **14** may be a heavier oil (e.g., naphtha, diesel, or both) which already contains sulphide compounds (or to which sulphides are spiked to achieve the sulphur content disclosed herein) and which is blended with the hydrocarbon stream **12** to achieve the sulphur content described above.

[0035] In alternative embodiments, one or more sulphides are present in the hydrocarbon stream as a result of upstream processing from which the hydrocarbon stream **12** flows. In such embodiments, the hydrocarbon stream **12** may contain one or more sulphides in an amount such that a sulphur content of the hydrocarbon stream **12**, without sulphide spiking, is about 0.5 wt %, 1 wt %, 1.5 wt %, 2 wt %, 2.5 wt %, 3 wt %, 3.5 wt %, 4 wt %, 4.5 wt %, 5 wt % or more based on the total weight of the hydrocarbon stream **12**.

[0036] In yet other embodiments, the hydrocarbon stream **12** may contain one or more sulphides in an amount insufficient for sulphiding (e.g., less than 5,000, 4,000, 3,000, 2,000, 1,000, 900, 800, 700, 600, 500, 400, 300, 200, 100, 90, 80, 70, 60, 50, 40, 30, 20, 10, 5, or 1 ppm) the hydroprocessing catalyst contained in the hydroprocessing reactor **20** (the catalyst is discussed in more detail below), and spiking stream **14** is utilized to raise the concentration of the one or more sulphides in the hydrocarbon stream to such that a sulphur content of the hydrocarbon stream **12**, after sulphide addition, is about 0.5 wt %, 1 wt %, 1.5 wt %, 2 wt %, 2.5 wt %, 3 wt %, 3.5 wt %, 4 wt %, 4.5 wt %, 5 wt % or more based on the total weight of the hydrocarbon stream **12**.

[0037] In an embodiment, the sulphur content of the hydrocarbon stream **12**, after sulphide addition using spiking stream **14**, is up to about 3 wt % based on the total weight of the hydrocarbon stream **12**. In another embodiment, the sulphur content of the hydrocarbon stream **12**, without sulphide addition using spiking stream **14**, is up to about **3** wt % based on the total weight of the hydrocarbon stream **12**.

[0038] The hydroprocessing reactor **20** is configured to dechlorinate, hydrogenate, and hydrocrack components of the hydrocarbon stream **12** fed to the hydroprocessing reactor **20**. In the hydroprocessing reactor **20**, the hydrocarbon stream **12** is contacted with the hydroprocessing catalyst in the presence of hydrogen to yield a hydrocarbon product in stream **22**. It is contemplated the hydrocarbon stream **12** may be contacted with the hydroprocessing catalyst in upward flow, downward flow, radial flow, or combinations thereof, with or without a staged addition of hydrocarbon stream **12**, spiking stream **14**, a H_2 stream **24**, or combinations thereof. It is further contemplated the components of the hydrocarbon stream **12** may be in the liquid phase, a liquid-vapor phase, or a vapor phase while in the hydroprocessing reactor **20**.

[0039] The hydroprocessing reactor **20** may facilitate any reaction of the components of the hydrocarbon stream **12** in the presence of, or with, hydrogen. Reactions may occur as the addition of hydrogen atoms to double bonds of unsaturated molecules (e.g., olefins, aromatic compounds), resulting in saturated molecules (e.g., paraffins, i-paraffins, naphthenes). Additionally, reactions in the hydroprocessing reactor **20** may cause a rupture of a bond of an organic compound, resulting in "cracking" of a hydrocarbon molecule into two or

more smaller hydrocarbon molecules, or resulting in a subsequent reaction and/or replacement of a heteroatom with hydrogen. Examples of reactions which may occur in the hydroprocessing reactor **20** include, but are not limited to, the hydrogenation of olefins, removal of heteroatoms from heteroatom-containing hydrocarbons (e.g., dechlorination), hydrocracking of large paraffins or i-paraffins to smaller hydrocarbon molecules, hydrocracking of aromatic hydrocarbons to smaller cyclic or acyclic hydrocarbons, conversion of one or more aromatic compounds to one or more cycloparaffins, isomerization of one or more normal paraffins to one or more i-paraffins, selective ring opening of one or more cycloparaffins to one or more i-paraffins, or combinations thereof.

[0040] In an embodiment, contacting the hydrocarbon stream **12** with the hydroprocessing catalyst in the presence of hydrogen yields a hydrocarbon product comprising C_1 to C_4 gases and C_5+ (C_5 and heavier) liquid hydrocarbons. As explained below, the separator **30** recovers the C_5+ liquid hydrocarbons in the treated hydrocarbon stream **32**. The C_1 to C_4 gases can be recovered in hydroprocessed light gas stream **36**.

[0041] In embodiments, the hydroprocessing reactor **20** may be any vessel configured to contain the hydroprocessing catalyst disclosed herein. The vessel may be configured for gas phase, liquid phase, vapor-liquid phase, or slurry phase operation. The hydroprocessing reactor **20** may include one or more beds of the hydroprocessing catalyst in fixed bed, fluidized bed, moving bed, ebullated bed, slurry bed, or combinations thereof, configuration. The hydroprocessing reactor **20** may be operated adiabatically, isothermally, nonadiabatically, non-isothermally, or combinations thereof.

[0042] The reactions of this disclosure may be carried out in a single stage or in multiple stages. For example, the hydroprocessing reactor **20** can be two reactor vessels fluidly connected in series, each having one or more catalyst beds of the hydrogenating catalyst. Alternatively, two or more stages for hydroprocessing may be contained in a single reactor vessel. In embodiments having multiple stages, the first stage may dechlorinate and hydrogenate components of the hydrocarbon stream **12** to yield a first hydrocarbon product having a first level of chloride compounds and olefins. The first hydrocarbon product may flow from the first stage to the second stage, where other components of the first hydrocarbon product are dechlorinated and hydrogenated to yield a second hydrocarbon product stream (stream **22** in FIG. **1**) having a second level of chloride compounds and olefins. In either one or multiple reactors, the sulphur present in the feed is also removed as H_2S to provide a reduced level of sulphur (e.g., sulphur content less than 200, 100, 90, 80, 70, 60, 50, 40, 30, 20, 10, 9, 8, 7, 6, 5, 4, 3, 2, 1, 0.5, 0.1 ppmw S based on total weight of stream **22**) acceptable for downstream processing in steam cracker **50** and refinery units. The second hydrocarbon stream may then be treated as described herein for stream **22**.

[0043] Embodiments of the disclosure contemplate a second hydroprocessing reactor and a second hydroprocessing separator may be placed in between separator **30** and treated hydrocarbon stream **32**. The treated product flowing from the separator **30**, in such embodiments, may contain residual sulphur, and the second hydroprocessing reactor/second separator combination may treat the treated product flowing from the separator **30** to completely remove the sulphur such that a second treated product flowing in the treated hydrocarbon stream **32** from the second separator contains less than 200, 100, 90, 80, 70, 60, 50, 40, 30, 20, 10, 9, 8, 7, 6, 5, 4, 3, 2, 1, 0.5, 0.1 ppmw S based on total weight of the treated hydrocarbon stream **32**. In embodiments having a second hydroprocessing reactor, C_1 to C_4 hydrocarbon gases generated in the second hydroprocessing reactor may flow from the second hydroprocessing reactor in a second hydroprocessed light gas stream. Similar to the hydroprocessed light gas stream **36** flowing from the separator **30**, the second hydroprocessed light gas stream may flow directly to the steam cracker **50**, may flow to a light gas scrubbing unit **60** and then to the steam cracker **50**, or may be blended with another light gas (treated or not) stream before flowing to the steam cracker **50**.

[0044] In an embodiment, the hydroprocessing reactor **20** may comprise one or more vessels.

[0045] In embodiments of a single vessel or multiple vessels, the sulphur present in the hydrocarbon stream **12** is removed as H_2S to provide a reduced level of sulphur acceptable for downstream processing in steam crackers and refinery units.

[0046] In an embodiment, hydrogen may feed to the hydroprocessing reactor **20** in stream **24**. The rate of hydrogen addition to the hydroprocessing reactor **20** is generally sufficient to achieve the hydrogen-to-hydrocarbon ratios disclosed herein.

[0047] The disclosed hydroprocessing reactor **20** may operate at various process conditions. For example, contacting the hydrocarbon stream **12** with the hydroprocessing catalyst in the presence of hydrogen may occur in the hydroprocessing reactor **20** at a temperature of 100° C. to 450° C.; alternatively, 100° C. to 350° C.; or alternatively, 260° C. to 350° C. Contacting the hydrocarbon stream **12** with the hydroprocessing catalyst in the presence of hydrogen may occur in the hydroprocessing reactor **20** at a pressure of 1 barg to 200 barg; or alternatively, 20 barg to 60 barg. Contacting the hydrocarbon stream **12** with the hydroprocessing catalyst in the presence of hydrogen may occur in the hydroprocessing reactor **20** at a weight hourly space velocity (WHSV) of between 0.1 hr^{-1} to 10 hr^{-1}; or alternatively, 1 hr^{-1} to 3 hr^{-1}. Contacting the hydrocarbon stream **12** with the hydroprocessing catalyst in the presence of hydrogen may occur in the hydroprocessing reactor **20** at a hydrogen-to-hydrocarbon (H_2/HC) flow ratio of 10 to 3,000 NL/L; or alternatively, 200 to 800 NL/L.

[0048] It is contemplated that dechlorination using the hydroprocessing catalyst as described herein is performed in the hydroprocessing reactor **20** without the use of chlorine sorbents, without addition of Na_2CO_3 in an effective amount to function as a dechlorinating agent, or both.

[0049] The hydroprocessing catalyst may be any catalyst used for hydrogenation (e.g., saturation) of olefins and aromatic hydrocarbons (e.g., a commercially available hydrotreating catalyst). In an embodiment, the hydroprocessing catalyst is a cobalt and molybdenum catalyst (Co—Mo catalyst) on an alumina support. In other embodiments, the hydroprocessing catalyst is a nickel and molybdenum catalyst (Ni—Mo catalyst) on an alumina support or tungsten and molybdenum catalyst (W—Mo catalyst) on an alumina support. Other catalyst embodiments may include platinum and palladium catalyst (Pt—Pd catalyst) on an alumina support, nickel sulphides suitable for slurry processing, molybdenum sulphides suitable for slurry processing, nickel and molybdenum sulphides, or combinations thereof. In embodiments

where the hydrocarbon stream **12** comprises one or more sulphides and one or more chloride compounds, contacting the hydrocarbon carbon stream **12** with the hydroprocessing catalyst acts to activate the hydroprocessing catalyst by sulphiding and to acidify the hydroprocessing catalyst by chlorinating. Continuously contacting the hydroprocessing catalyst with the hydrocarbon stream **12** containing the one or more sulphides, the one or more chloride compounds, or both, may maintain the catalyst activity on a continuous basis.

[0050] In embodiments, the hydroprocessing catalyst is activated and/or the activity is maintained by sulphiding the hydroprocessing catalyst in-situ. For example, the hydroprocessing catalyst may be sulphided (i.e., activated) and/or sulphiding (i.e., maintaining the catalyst activity) of the hydroprocessing catalyst may be performed (e.g., maintaining the hydroprocessing catalyst in sulphided form is accomplished) by continuously contacting the hydrocarbon stream **12** containing one or more sulphides with the hydroprocessing catalyst. The one or more sulphides may be included in the hydrocarbon stream **12** in an amount such that the sulphur content of the hydrocarbon stream **12** is about 0.5 wt %, 1 wt %, 1.5 wt %, 2 wt %, 2.5 wt %, 3 wt %, 3.5 wt %, 4 wt %, 4.5 wt %, or 5 wt % based on the total weight of the hydrocarbon stream **12**.

[0051] Alternatively, the hydroprocessing catalyst may be sulphided (i.e., activated) by contacting a catalyst activating stream **26** containing one or more sulphides with the hydroprocessing catalyst for a period of time (e.g., 1, 2, 3, 4, 5, 6, 7, 8, 9 or more hours) sufficient to activate the hydroprocessing catalyst (before contacting the hydrocarbon stream **12** with the hydroprocessing catalyst). In such embodiments, the catalyst activating stream **26** may include a hydrocarbon carrier for the one or more sulphides, such as hexadecane. The one or more sulphides may be included in the catalyst activating stream **26** in an amount such that the sulphur content of the catalyst activating stream **26** is about 0.5 wt %, 1 wt %, 1.5 wt %, 2 wt %, 2.5 wt %, 3 wt %, 3.5 wt %, 4 wt %, 4.5 wt %, 5 wt % or more based on the total weight of the catalyst activating stream **26**. After the hydroprocessing catalyst is activated with the catalyst activating stream **26**, flow of the catalyst activating stream **26** may be discontinued, and sulphiding (i.e., maintaining the catalyst activity) of the hydroprocessing catalyst may be maintained (e.g., maintaining the hydroprocessing catalyst in sulphided form is accomplished) by continuously contacting the hydrocarbon stream **12** containing one or more sulphides with the hydroprocessing catalyst. The one or more sulphides may be included in the hydrocarbon stream **12** in an amount such that the sulphur content of the hydrocarbon stream **12** is about 0.5 wt %, 1 wt %, 1.5 wt %, 2 wt %, 2.5 wt %, 3 wt %, 3.5 wt %, 4 wt %, 4.5 wt %, or 5 wt % based on the total weight of the hydrocarbon stream **12**.

[0052] In embodiments, sulphiding and maintaining the catalyst in sulphided form may use two different concentrations of sulphur content in the hydrocarbon stream **12**. For example, the one or more sulphides may be included (e.g., provided via spiking stream **14**) in the hydrocarbon stream **12** in an amount such that the sulphur content of the hydrocarbon stream **12** is about 2 wt % based on the total weight of the hydrocarbon stream **12** for sulphiding, and the one or more sulphides may be maintained (e.g., via spiking stream **14**) in the hydrocarbon stream **12** in an amount such that the sulphur content of the hydrocarbon stream **12** is about 2 wt % based on the total weight of the hydrocarbon stream **12** for maintaining the hydroprocessing catalyst in the sulphided form. In another example, the one or more sulphides may be included in the catalyst activating stream **26** in an amount such that the sulphur content of the catalyst activating stream **26** is about 3 wt % based on the total weight of the catalyst activating stream **26** for sulphiding, and the one or more sulphides may be included (e.g., via spiking stream **14**) in the hydrocarbon stream **12** in an amount such that the sulphur content of the hydrocarbon stream **12** is about 2 wt % based on the total weight of the hydrocarbon stream **12** for maintaining the hydroprocessing catalyst in the sulphided form.

[0053] In embodiments, catalyst activity is also maintained by chloriding the hydroprocessing catalyst. The hydroprocessing catalyst is chlorided using the one more chloride compounds provided to the hydroprocessing catalyst by the hydrocarbon stream **12**. The one or more chloride compounds which contribute to acidification of the hydroprocessing catalyst may be included in the hydrocarbon stream **12** in concentrations disclosed herein.

[0054] Sulphiding and maintaining the hydroprocessing catalyst in sulphided form result in a hydroprocessing catalyst which has hydrogenation sites (sulphided metal) for hydrogenation of components of the hydrocarbon stream **12**. Chloriding the hydroprocessing catalyst results in a hydroprocessing catalyst which has hydrocracking sites (chloride alumina) for hydrocracking components of the hydrocarbon stream **12**.

[0055] Due to hydrogenation reactions in the hydroprocessing reactor **20**, in embodiments, the hydrocarbon product stream **22** may contain one or more olefins in a concentration of less than 1 wt % based on the total weight of the hydrocarbon product stream **22**. It is also contemplated that the concentration of aromatic hydrocarbons in the hydrocarbon product stream **22** is less than the concentration of aromatic hydrocarbons in the hydrocarbon stream **12** due to hydrogenation of at least a portion of the aromatic hydrocarbons in the hydroprocessing reactor **20**. For example, aromatic hydrocarbons may be present in the hydrocarbon product stream **22** in a concentration of less than 10, 9, 8, 7, 6, 5, 4, 3, 2, or 1 wt % based on the total weight of the hydrocarbon product stream **22**. In an embodiment, the hydrocarbon product stream **22** may have 2 wt % or less in a liquid phase which boils above 370° C.

[0056] The reaction product flows as effluent from the hydroprocessing reactor **20** in the hydrocarbon product stream **22** to the separator **30**. Separator **30** may be any vessel which can recover a treated hydrocarbon stream **32** from the hydrocarbon product **22** which is fed to the separator **30**. In embodiments, the treated hydrocarbon stream **32** may be recovered by separating a treated product (e.g., liquid product or gas product) from sulphur and chlorine-containing gas in the separator **30**, and flowing the treated product in the treated hydrocarbon stream **32** from the separator **30**.

[0057] In an embodiment, the separator **30** is a condenser which operates at conditions which condense a portion of the hydrocarbon product stream **22** into the treated product (e.g., liquid product or treated liquid product) while leaving sulphur and chlorine-containing compounds in the gas phase. The treated liquid product flows from the separator **30** in treated hydrocarbon stream **32**, and the sulphur and chlorine-containing gas flows from the separator **30** via hydroprocessed light gas stream **36**. In such embodiments, the treated liquid product may comprise C_5+ (C_5 and heavier) liquid hydrocarbons.

[0058] In another embodiment, the separator **30** is a scrubbing unit containing a caustic solution (e.g., a solution of

sodium hydroxide in water) which removes (e.g., via reaction, adsorption, absorption, or combinations thereof) sulphur and chlorine-containing gases from the hydrocarbon product stream **22** to yield the treated product which flows from the separator **30** via treated hydrocarbon stream **32** while the C_1 to C_4 hydrocarbons and sulphur and chlorine-containing compounds are removed from the separator **30** via hydroprocessed light gas stream **36**. In such embodiments, the treated liquid product may comprise C_5+ (C_5 and heavier) liquid hydrocarbons.

[0059] In yet another embodiment, the separator **30** is a condenser in communication with one or more stages of a gas-liquid separator positioned downstream of the condenser and a scrubbing unit containing a caustic solution. As described above, the condenser may operate at conditions which condense a portion of the hydrocarbon product stream **22** into a mid-treated product (e.g., liquid product or treated liquid product) while leaving sulphur and chlorine-containing compounds in the gas phase. In such embodiments, the mid-treated product may comprise C_5+ (C_5 and heavier) liquid hydrocarbons. The mid-treated liquid product and the mid-treated gas product flow from the first stage of the gas-liquid separator, and the mid-treated gas product is treated in the scrubbing unit of the separator **30**. The mid-treated liquid product flows out of the first stage of the gas-liquid separator and experiences a pressure reduction (e.g., via a valve or other pressure reducing device known in the art with the aid of this disclosure), which creates an effluent gas (e.g., via flashing) which flows to the scrubbing unit for further removal of sulphur and chlorine-containing compounds from the liquid hydrocarbons. The treated product flowing in hydrocarbon stream **32** flows from the scrubbing unit of the separator **30** to the polishing zone **40** via stream **32**. Sulphur and chlorine-containing compounds flow from the separator **30** in hydroprocessed light gas stream **36**.

[0060] In embodiments disclosed herein, no hydrogen halides and no halogenated organic compounds are recycled to the hydroprocessing reactor **20**.

[0061] In embodiments, the treated hydrocarbon stream **32** includes one or more chloride compounds in a concentration of less than 5 ppm, 4 ppm, 3 ppm, 2 ppm, 1 ppm, or 0.5 ppm based on a total weight of the treated hydrocarbon stream **32**. It is contemplated that the one or more chloride compounds in the treated hydrocarbon stream **32** may be the same as some or all of the one or more chloride compounds in the hydrocarbon stream **12**; alternatively, it is contemplated that only some of the one or more chloride compounds in the treated hydrocarbon stream **32** are the same as only some of the one or more chloride compounds in the hydrocarbon stream **12**; alternatively, it is contemplated that none of the one or more chloride compounds in the treated hydrocarbon stream **32** are the same as the one or more chloride compounds in the hydrocarbon stream **12**.

[0062] In additional embodiments, the treated hydrocarbon stream **32** includes the one or more olefins in a concentration which is less than a concentration of the one or more olefins in the hydrocarbon stream **12** due to hydrogenation of at least a portion of the one or more olefins from the hydrocarbon stream **12** while the hydrocarbon stream **12** is contacted with the hydroprocessing catalyst in the hydroprocessing reactor **20**. In yet additional embodiments, the treated hydrocarbon stream **32** includes the one or more olefins in a concentration which is less than a concentration of the one or more olefins in the hydrocarbon stream **12** due to hydrogenation and hydrocracking of at least a portion of the one or more olefins from the hydrocarbon stream **12** while the hydrocarbon stream **12** is contacted with the hydroprocessing catalyst in the hydroprocessing reactor **20**. In an embodiment, the one or more olefins are present in the treated hydrocarbon stream **32** in a concentration of less than 1 wt % based on the total weight of the treated hydrocarbon stream **32**.

[0063] In embodiments, the treated hydrocarbon stream **32** includes one or more paraffins, and one or more olefins in a concentration of less than 1 wt % based on the total weight of the treated hydrocarbon stream **32**. It is also contemplated that the concentration of aromatic hydrocarbons in the treated hydrocarbon stream **32** is less than the concentration of aromatic hydrocarbons in the hydrocarbon stream **12** due to hydrogenation of at least a portion of the aromatic hydrocarbons in the hydroprocessing reactor **20**. For example, aromatic hydrocarbons may be present in the treated hydrocarbon stream **32** in a concentration of less than 10, 9, 8, 7, 6, 5, 4, 3, 2, or 1 wt % based on the total weight of the treated hydrocarbon product stream **32**.

[0064] In embodiments, the treated hydrocarbon stream **32** may have a reduced concentration of heavy hydrocarbon molecules compared to the concentration of heavy hydrocarbon molecules in the hydrocarbon stream **12** due to hydrocracking of at least a portion of the heavy hydrocarbon molecules from the hydrocarbon stream **12** while the hydrocarbon stream **12** is contacted with the hydroprocessing catalyst. In further embodiments, the treated hydrocarbon stream **32** may comprise none of the heavy hydrocarbon molecules form the hydrocarbon stream **12** due to hydrocracking of the heavy hydrocarbon molecules in the hydroprocessing reactor **20**. Due to hydrocracking of heavy hydrocarbon molecules when the hydrocarbon stream **12** is contacted with the hydroprocessing catalyst in the hydroprocessing reactor **20**, the treated hydrocarbon stream **32** may have a boiling end point of 370° C. In an embodiment, the treated hydrocarbon stream **32** may have 2 wt % or less in a liquid phase which boils above 370° C.

[0065] In embodiments where the treated hydrocarbon stream **32** includes one or more chloride compounds in a concentration of less than 3 ppm, the treated hydrocarbon product flowing in treated hydrocarbon stream **32** may be fed directly to the steam cracker **50** by flowing through bypass stream **34**. In alternative embodiments where the treated hydrocarbon stream **32** includes one or more chloride compounds in a concentration of 3 ppm or more (e.g., 3 ppm to 5 ppm), the treated hydrocarbon stream **32** may flow to the polishing zone **40** in order to reduce the chloride content to meet the requirements of the steam cracker **50**.

[0066] To further reduce chloride content, embodiments of the processes disclosed herein may include dechlorinating the treated hydrocarbon stream **32** to yield a polished hydrocarbon stream **42**. Dechlorination may occur in the polishing zone **40**. The polishing zone **40** may be considered a polishing stage in which the treated hydrocarbon stream **32** is "polished" to reduce the chloride content. In order to use the hydroprocessing catalyst in the hydroprocessing reactor **20** until end-of-run conditions (e.g., in order to maintain hydrogenation/saturation performance), the operating temperature (e.g., the catalyst bed temperature) of the hydroprocessing reactor **20** may be increased. As the operating temperature of the hydroprocessing reactor **20** is increased, operating conditions may not yield a chloride content in the treated hydrocarbon stream **32** which meets the requirements for the steam

cracker **50** (e.g., at temperatures above 350° C. the treated hydrocarbon stream **32** may have a chloride content 3-5 ppm and not less than 3 ppm as required by the steam cracker **50**). In such embodiments, the treated hydrocarbon stream **32** may be diverted from flowing in the bypass stream **34** and may be directed to flow to the polishing zone **40** for further chloride removal such that a polished hydrocarbon stream **42** flowing from the polishing zone **40** has a concentration of one or more chlorides which meet the requirement of the steam cracker **50**.

[0067] Similar to the hydroprocessed light gas stream **36** flowing from the separator **30**, a polished light gas stream **46** comprising C_1 to C_4 gases generated in the polishing zone **40** (e.g., in hydroprocessing reactor **41** of FIG. **2**) may flow directly to the steam cracker **50**, may flow to the light gas scrubbing unit **60** and then to the steam cracker **50**, or may be blended with another light gas (treated or not) stream before flowing to the steam cracker **50**.

[0068] In an embodiment, dechlorinating the treated hydrocarbon stream **32** may include removing at least a portion of the one or more chloride compounds remaining in the treated hydrocarbon stream **32** via adsorptive dechlorination to yield the polished hydrocarbon stream **42**. Removal of remaining chloride compounds may occur in the polishing zone **40** in the form of one or more adsorption units. The one or more adsorption units may contain one or more adsorbents (e.g., goethite, hematite, magnetite, alumina, alumino-silicate, gamma alumina, or combinations thereof) which removes (e.g., via reaction, adsorption, absorption, or combinations thereof) a portion of the one or more remaining chloride compounds from the treated hydrocarbon stream **32** to yield a polished hydrocarbon product which flows from the adsorption unit via polished hydrocarbon stream **42**. One or more chloride compounds which are removed by the sorbent in the adsorption unit may be recovered from the adsorption unit(s) via processes known in the art with the aid of this disclosure (e.g., regeneration of adsorption units operating in parallel). An example of an adsorption process suitable for use in the polishing zone **40** is found in U.S. Patent Publication No. 2015/053,589, which is hereby incorporated by reference.

[0069] In an additional or alternative embodiment, dechlorinating the treated hydrocarbon stream **32** may include contacting the treated hydrocarbon stream **32** with a second hydroprocessing catalyst in the presence of hydrogen to yield a second hydrocarbon product. In such embodiments, the polishing zone **40** may be a second hydroprocessing stage in the system **100**. That is, in embodiments, the polishing zone **40** may include another hydroprocessing reactor which is the second stage of hydroprocessing in a two-stage hydroprocessing configuration (the hydroprocessing reactor **20** being the first stage). FIG. **2** illustrates a polishing zone **40** which is a second stage of hydroprocessing.

[0070] Referring to FIG. **2**, the hydroprocessing reactor **41** of the polishing zone **40** is configured to dechlorinate, hydrogenate, and hydrocrack components of the treated hydrocarbon stream **32** fed to the hydroprocessing reactor **41**. In the hydroprocessing reactor **41**, the treated hydrocarbon stream **32** is contacted with a second hydroprocessing catalyst in the presence of hydrogen to yield a second hydrocarbon product in stream **43**. It is contemplated the treated hydrocarbon stream **32** may be contacted with the hydroprocessing catalyst in upward flow, downward flow, radial flow, or combinations thereof. It is further contemplated the components of the treated hydrocarbon stream **32** may be in the liquid phase, a liquid-vapor phase, or a vapor phase while in the hydroprocessing reactor **41**.

[0071] The hydroprocessing reactor **41** may facilitate dechlorination of the treated hydrocarbon stream **32** in the presence of, or with, hydrogen. Other reactions in addition to dechlorination reactions may occur in hydroprocessing reactor **41**, for example, the reactions discussed for hydroprocessing reactor **20**.

[0072] In embodiments, the hydroprocessing reactor **41** may be any vessel configured to contain the hydroprocessing catalyst disclosed herein. The vessel may be configured for gas phase, liquid phase, vapor-liquid phase, or slurry phase operation. The hydroprocessing reactor **41** may include one or more beds of the second hydroprocessing catalyst in fixed bed, fluidized bed, moving bed, ebullated bed, slurry bed, or combinations thereof, configuration. The hydroprocessing reactor **41** may be operated adiabatically, isothermally, nonadiabatically, non-isothermally, or combinations thereof.

[0073] In an embodiment, hydrogen may feed to the hydroprocessing reactor **41** in stream **44**. The rate of hydrogen addition to the hydroprocessing reactor **41** is generally sufficient to achieve the hydrogen-to-hydrocarbon ratios disclosed herein.

[0074] The hydroprocessing reactor **41** may operate within the same ranges for temperature, pressure, weight hourly space velocity (WHSV), and hydrogen-to-hydrocarbon (H_2/HC) flow ratio disclosed for hydroprocessing reactor **20**. In embodiments, while the hydroprocessing reactor **20** and hydroprocessing reactor **41** may operate within the same ranges, the values for temperature, pressure, weight hourly space velocity (WHSV), and hydrogen-to-hydrocarbon (H_2/HC) flow ratio of the hydroprocessing reactor **41** may or may not be the same as the values for temperature, pressure, weight hourly space velocity (WHSV), and hydrogen-to-hydrocarbon (H_2/HC) flow ratio of the hydroprocessing reactor **20**. For example, hydroprocessing reactor **41** may operate at the same temperature, pressure, weight hourly space velocity (WHSV), or hydrogen-to-hydrocarbon (H_2/HC) flow ratio as hydroprocessing reactor **20**, while all other conditions are not the same.

[0075] It is contemplated that dechlorination using the second hydroprocessing catalyst as described herein is performed in the hydroprocessing reactor **41** without the use of chlorine sorbents, without addition of Na_2CO_3 in an effective amount to function as a dechlorinating agent, or both.

[0076] The second hydroprocessing catalyst used in the hydroprocessing unit **41** may be any catalyst used for hydrogenation (e.g., saturation) of olefins and aromatic hydrocarbons (e.g., a commercially available hydrotreating catalyst). In an embodiment, the second hydroprocessing catalyst is a cobalt and molybdenum catalyst (Co—Mo catalyst) on an alumina support. In other embodiments, the second hydroprocessing catalyst is a nickel and molybdenum catalyst (Ni—Mo catalyst) on an alumina support or tungsten and molybdenum catalyst (W—Mo catalyst) on an alumina support. Other second catalyst embodiments may include platinum and palladium catalyst (Pt—Pd catalyst) on an alumina support, nickel sulphides suitable for slurry processing, molybdenum sulphides suitable for slurry processing, nickel and molybdenum sulphides, or combinations thereof. In embodiments where the treated hydrocarbon stream **32** comprises one or more chloride compounds, contacting the

treated hydrocarbon carbon stream **32** with the second hydroprocessing catalyst acts to acidify the second hydroprocessing catalyst by chlorinating.

[0077] In embodiments, the second hydroprocessing catalyst is chlorided using the one more chloride compounds provided to the second hydroprocessing catalyst by the treated hydrocarbon stream **32**. The one or more chloride compounds which contribute to acidification of the second hydroprocessing catalyst may be in the treated hydrocarbon stream **32** in concentrations disclosed herein, e.g., 3 to 5 ppm. Chloriding the second hydroprocessing catalyst results in a hydroprocessing catalyst which has hydrocracking sites (chloride alumina) for hydrocracking components of the treated hydrocarbon stream **32**.

[0078] While hydrogenation in hydroprocessing reactor **41** may occur without sulphiding, in embodiments where further hydrogenation is desired, the second hydroprocessing catalyst may be sulphided in the same manner as disclosed for the first hydroprocessing catalyst in the hydroprocessing reactor **20** (e.g., treated hydrocarbon stream **32** may be spiked with sulphides via a spiking stream, a catalyst activating stream may provide sulphides to the hydroprocessing reactor **41**, or both).

[0079] Due to hydrocracking reactions in the hydroprocessing reactor **41**, in embodiments, the polished hydrocarbon stream **43** may contain fewer heavy hydrocarbon molecules than treated hydrocarbon stream **32**. The polished hydrocarbon product stream **43** may also contain one or more olefins in a concentration of less than 1 wt % based on the total weight of the polished hydrocarbon product stream **43** (e.g., either via further hydrogenation in hydroprocessing reactor **41**, via the hydrogenation which occurs in hydroprocessing reactor **20**, or both).

[0080] The reaction product of the second hydroprocessing reactor **41** flows as effluent from the hydroprocessing reactor **41** in the polished hydrocarbon product stream **43** to the second separator **45**. Separator **45** may be any vessel which can recover a polished hydrocarbon stream **42** from the polished hydrocarbon product stream **43** which is fed to the separator **45**. In embodiments, the polished hydrocarbon stream **42** may be recovered by separating a polished product (e.g., liquid product or gas product) from chlorine-containing gas in the separator **45**, and flowing the polished product in the polished hydrocarbon stream **42** from the separator **45**.

[0081] In an embodiment, the separator **45** is a condenser which operates at conditions which condense a portion of the polished hydrocarbon product stream **43** into the polished product (e.g., liquid product or polished liquid product) while leaving chlorine-containing compounds in the gas phase. The polished liquid product flows from the separator **45** in polished hydrocarbon stream **42**, and the chlorine-containing gas flows from the separator **45** via gas stream **47** or from the hydroprocessing reactor **41** via stream **46**.

[0082] In another embodiment, the separator **45** is a scrubbing unit containing a caustic solution (e.g., a solution of sodium hydroxide in water) which removes (e.g., via reaction, adsorption, absorption, or combinations thereof) chlorine-containing gases from the polished hydrocarbon product stream **43** to yield the polished product (e.g., gas product or treated gas product) which flows from the separator **45** via polished hydrocarbon stream **42** while the chlorine-containing compounds in the gas phase flow from the separator **45** via chloride stream **47**.

[0083] In yet another embodiment, the separator **45** is a polishing condenser in communication with one or more stages of a gas-liquid separator which are downstream of the condenser, and a polishing scrubbing unit containing a caustic solution. As described above, the condenser may operate at conditions which condense a portion of the polished hydrocarbon product stream **43** into a mid-treated polished product while leaving chlorine-containing compounds in the gas phase. The gases flow into the polishing scrubbing unit from the gas-liquid separator kept downstream of the condenser, to provide a sulphur-free and chloride-free treated gas. In such embodiments, the mid-treated polished product may comprise C_5+ (C_5 and heavier) liquid hydrocarbons. The mid-treated polished liquid product flows from the first stage of the gas-liquid separator and experiences a pressure reduction (e.g., via a valve or other pressure reducing device known in the art with the aid of this disclosure) and flows into a second stage of the gas-liquid separator, which creates an effluent gas (e.g., via flashing) which flows to the polishing scrubbing unit for further removal of chlorine-containing compounds from the liquid hydrocarbons. The treated product flowing in polished hydrocarbon stream **42** flows from the second stage of the gas-liquid separator of the separator **45** to the steam cracker **50**.

[0084] In embodiments disclosed herein, no hydrogen halides and no halogenated organic compounds are recycled to the hydroprocessing reactor **41**.

[0085] Embodiments of the disclosed processes also contemplate the polishing zone **40** may include one or more adsorption units as described above in series with a second hydroprocessing reactor **41**/separator **45** of FIG. **2**, where the adsorption unit dechlorinates the treated hydrocarbon stream **32** and passes an intermediate stream to the second hydroprocessing reactor **41** for further dechlorination to yield the polished hydrocarbon stream **42** having a chloride content required for the steam cracker **50**, e.g., less than 3 ppm chlorides. Alternatively, instead of being upstream of second hydroprocessing reactor **41**, the adsorption unit can be directly downstream of the second hydroprocessing reactor **41**.

[0086] In embodiments, the polished hydrocarbon stream **42** includes one or more chloride compounds in a concentration of less than 3 ppm, 2 ppm, 1 ppm, or 0.5 ppm based on a total weight of the polished hydrocarbon stream **42**. It is contemplated that the one or more chloride compounds in the polished hydrocarbon stream **42** may be the same as some or all of the one or more chloride compounds in the treated hydrocarbon stream **32** and/or hydrocarbon stream **12**; alternatively, it is contemplated that only some of the one or more chloride compounds in the polished hydrocarbon stream **42** are the same as only some of the one or more chloride compounds in the treated hydrocarbon stream **32** and/or the hydrocarbon stream **12**; alternatively, it is contemplated that none of the one or more chloride compounds in the polished hydrocarbon stream **42** are the same as the one or more chloride compounds in the treated hydrocarbon stream **32** and/or the hydrocarbon stream **12**.

[0087] In additional embodiments, the polished hydrocarbon stream **42** includes the one or more olefins in a concentration of less than 1 wt % based on the total weight of the polished hydrocarbon stream **42**. In embodiments, the polished hydrocarbon stream **42** may have a reduced concentration of heavy hydrocarbon molecules compared to the concentration of heavy hydrocarbon molecules in the treated

hydrocarbon stream **32** due to hydrocracking of at least a portion of the heavy hydrocarbon molecules from the treated hydrocarbon stream **32** while the treated hydrocarbon stream **32** is contacted with the second hydroprocessing catalyst in the hydroprocessing reactor **41**. In embodiments, the polished hydrocarbon stream **42** may have a boiling end point of 370° C.

[0088] In embodiments where the polished hydrocarbon stream **42** includes one or more chloride compounds in a concentration of less than 3 ppm, the polished hydrocarbon product flowing in polished hydrocarbon stream **42** may be fed directly to the steam cracker **50** (e.g., without fractionation or separation before flowing to the steam cracker **50**).

[0089] Steam cracker **50** generally has feed specification requirements. First, the steam cracker **50** requires the concentration of chloride compounds in the feed to the steam cracker **50** to be less than 3 ppm. Second, the steam cracker **50** requires the concentration of olefins in a stream fed to the steam cracker **50** to be less than 1 wt %. Third, the steam cracker **50** requires the boiling end point of the stream fed to the steam cracker **50** to be 370° C. The steam cracker **50** cracks molecules or cleaves at elevated temperatures carbon-carbon bonds of the components in the bypass stream **34** or polished hydrocarbon stream **42** in the presence of steam to yield high value products such as ethylene, propylene, butene, butadiene, aromatic compounds, or combinations thereof. Likewise, in embodiments having light gas streams **16** and/or **46**, the steam cracker **50** cracks molecules or cleaves at elevated temperatures carbon-carbon bonds of the components in the treated light gas product (e.g., of treated pyrolysis light gas stream **62** and/or treated hydroprocessed light gas stream **64**) in the presence of steam to yield high value products such as ethylene, propylene, butene, butadiene, aromatic compounds, or combinations thereof. The high value products may flow from the steam cracker **50** via stream **52**.

[0090] One or more of the pyrolysis gases (e.g., C_1 to C_4 gases) in the pyrolysis light gas stream **16**, the C_1 to C_4 gases in the hydroprocessed light gas stream **36**, and the C_1 to C_4 gases in the polished light gas stream **46** may flow to a light gas scrubbing unit **60**. The C_1 to C_4 gases may be C_1 to C_4 hydrocarbons. The light gas scrubbing unit **60** may be the same scrubbing unit used in embodiments of the separator **30** which include a scrubbing unit, or the light gas scrubbing unit **60** may be in addition to any scrubbing unit included in the separator **30**. As described for the scrubbing unit of the separator **30**, the light gas scrubbing unit **60** may contain a caustic solution (e.g., a solution of sodium hydroxide in water) which removes (e.g., via reaction, adsorption, absorption, or combinations thereof) sulphur and chlorine-containing gases from the stream (e.g., pyrolysis light gas stream **16** and/or hydroprocessed light gas stream **46**) fed to the light gas scrubbing unit **60** and yield a treated light gas product (e.g., treated pyrolysis light gas stream **62**, treated hydroprocessed light gas stream **64**, or a single treated light gas stream which combines the treated hydroprocessed product and treated pyrolysis product) which flows from the light gas scrubbing unit **60** to the steam cracker **50**. The removed compounds (sulphur and/or chlorine containing gases) may flow from the scrubbing unit **60** in stream **66**.

[0091] In embodiments utilizing light gas scrubbing unit **60**, the treated pyrolysis light gas stream **62** may include one or more sulphide and/or chloride compounds in a concentration of less than 5 ppm, 4 ppm, 3 ppm, 2 ppm, 1 ppm, or 0.5 ppm based on a total weight of the treated pyrolysis light gas stream **62**.

[0092] In embodiments utilizing scrubbing unit **60**, the treated hydroprocessed light gas stream **64** may include one or more sulphide and/or chloride compounds in a concentration of less than 5 ppm, 4 ppm, 3 ppm, 2 ppm, 1 ppm, or 0.5 ppm based on a total weight of the treated hydroprocessed light gas stream **64**.

[0093] It is contemplated that embodiments of the disclosure may utilize blending with a non-chlorinated stream in various locations of the system **100**. For example, a non-chlorinated stream may be blended with bypass stream **34** to achieve the feed specification requirements for chlorine content, olefin content, boiling end point, sulphur content, or combinations thereof for the steam cracker **50**. In another example, a non-chlorinated stream may be blended with treated hydrocarbon stream **32** to lower the chlorine content, olefin content, boiling end point, sulphur content, or combinations thereof such that subsequent treatment in the polishing zone **40** achieves the feed specification requirements for the steam cracker **50**. In another example, a non-chlorinated stream may be blended with polished hydrocarbon stream **42** to achieve the feed specification requirements for chlorine content, olefin content, boiling end point, sulphur content, or combinations thereof for the steam cracker **50**. Utilizing a blending stream provides a mechanism by which the chloride content, sulphur content, olefin content, and boiling end point can be adjusted to meet feed specification requirements of the steam cracker **50** without additional capital expenditure on equipment.

[0094] The foregoing describes a system **100** which implements one or more embodiments of a robust integrated process for the conversion of waste plastics to high value products. The robust integrated processes allow for operation with a single hydroprocessing reactor **20** which provides simultaneous hydrogenation, dechlorination, and hydrocracking of components of a hydrocarbon stream **12** to specifications which meet steam cracker **50** requirements, with the option to further dechlorinate the treated hydrocarbon stream **32** in a polishing zone **40**, for example, when the hydroprocessing reactor **20** conditions are modified to maintain hydrogenation/saturation efficiency at the expense of dechlorination efficiency. In such scenarios, it is possible that chloride levels in the treated hydrocarbon stream **32** do not meet requirements of steam cracker **50** because the concentration of one or more chloride compounds in the treated hydrocarbon stream **32** is not less than 3 ppm, for example, the concentration is 3-5 ppm. As such, the polishing zone **40** provides for further dechlorination to meet the chloride content requirement of the steam cracker **50**. In embodiments where the polishing zone **40** is a second hydroprocessing reactor **41**, hydrocracking, hydrogenation, or both, of the components of the treated hydrocarbon stream **32** may also occur in addition to dechlorination.

[0095] When operating with a single hydroprocessing step in hydroprocessing reactor **20**, the treated hydrocarbon stream **32** is suitable for feeding directly to steam cracker **50**, without separations or fractionations of the treated hydrocarbon product. When operating with use of the polishing zone **40**, the treated hydrocarbon stream **32** is "polished" to yield polished hydrocarbon stream **42** without fractionation or further separation of the polished hydrocarbon stream **42**.

[0096] Catalyst activity of the hydroprocessing catalyst can be initiated and/or maintained simultaneously with the simultaneous hydrogenation, dechlorination, and hydrocracking by using streams of the compositions disclosed herein which feed to a hydroprocessing reactor.

[0097] The hydroprocessing catalyst in hydroprocessing reactor **20** may be the same or different from the hydroprocessing catalyst in the hydroprocessing reactor **41**. In embodiments where the hydroprocessing catalyst is the same for both first hydroprocessing reactor **20** and second hydroprocessing reactor **41**, the operating conditions of the reactors **20** and **41** may be adjusted to achieve the desired feed specifications for steam cracker **50**. In addition, catalyst sulphiding may be adjusted. For example, first hydroprocessing catalyst in the hydroprocessing reactor **20** may be sulphided as disclosed herein while the second hydroprocessing catalyst in the hydroprocessing reactor **41** is not sulphided via the techniques disclosed herein. By not sulphiding the second hydroprocessing catalyst, the first hydroprocessing catalyst can be tuned for simultaneous hydrogenation, dechlorination, and hydrocracking while the second hydroprocessing catalyst can be tuned for dechlorination and hydrocracking (some hydrogenation may occur; however, the concentration of sulphided metal sites which provide for hydrogenation by the second hydroprocessing catalyst is less than the concentration of sulphided metal sites provided by the first hydroprocessing catalyst). The robustness of the disclosed processes may also allow for intermittent sulphiding of the second hydroprocessing catalyst in the hydroprocessing reactor **41** in order to adjust the degree of hydrogenation in the second hydroprocessing reactor as a result of fluctuations in the hydrogenation efficiency in the first hydroprocessing reactor **20**.

[0098] Examples provided below demonstrate the various embodiments of the pyrolysis process for generating a pyrolysis oil or hydrocarbon stream, not limited by the equipment used. These examples are for high severity pyrolysis process carried out at temperatures of 450° C. to 750° C., low severity pyrolysis process carried out at 250° C. to 450° C., hydrogen or hydrogen donor assisted (hydropyrolysis) processes carried out at both the above severities as well as use of a catalyst recipe and a combination of sand and catalyst as a catalyst recipe. Though these examples are provided for fluidized beds where in the heat transfer and catalyst/feed contact are good, directionally the same type of results can be obtained with other types of pyrolysis equipment as described herein.

[0099] Also, as is demonstrated in the examples below and discussed above, it has been found that hydrocracking of olefins and heavy hydrocarbon molecules contained in a hydrocarbon stream occurs using a hydroprocessing catalyst at the conditions disclosed herein. The olefins are hydrogenated in addition to being hydrocracked. Moreover, chloride compounds contained in the hydrocarbon stream are removed using hydroprocessing catalyst. Hydrocracking according to the embodiments disclosed herein can occur over the operating pressures disclosed herein for hydroprocessing reactor **20**, including those low pressures demonstrated in the examples. Embodiments of the processes disclosed herein meet the boiling end point of 370° C. required for steam crackers. Moreover, the disclosed embodiments demonstrate that about 30 wt % of the heavy hydrocarbon molecules of a hydrocarbon stream can undergo hydrocracking at the conditions disclosed herein. When the hydrocarbon stream contains plastic and/or tire pyrolysis oil, the heavier ends of the pyrolysis oil are hydrocracked. Increased levels of paraffins due to the hydrocracking ability of the processes disclosed herein can result in a higher production of propylene in steam crackers. LPG gases are not liberated in the disclosed processes until the temperature of the one or more catalyst beds in the hydroprocessing reactor **20** reaches about 400° C. Gas product formation is minimized, which is useful for existing plants which are constrained on the gas flow rate to the gas compressor section. In the disclosed embodiments, the production of methane and ethane is also low.

[0100] Dechlorination according to the embodiments disclosed herein can occur over the operating temperature ranges disclosed herein for the hydroprocessing reactor **20**, including operating temperatures in the low-end of the temperature ranges disclosed herein. Removal of chloride compounds to less than 1 ppm occurs at temperatures below 350° C. Moreover, achieving sub-ppm chloride compound concentrations is possible with initial chloride content in the hydrocarbon stream **12** of 1,000 ppm or more. Moreover still, removal of chloride compounds is effective for different types and classes of chlorides present in the hydrocarbon stream **12**. When the hydroprocessing reaction is conducted at temperatures at or above 350° C., it has been found that the treated hydrocarbon product contains 3 ppm or higher chloride content. In such cases, blending with a non-chlorinated stream can be utilized. For example, the treated hydrocarbon product stream **32**, bypass stream, **34**, polished hydrocarbon stream **42**, or combinations thereof can be blended with a non-chlorinated stream in such proportions to make the combined blended treated hydrocarbon stream meet the steam cracker feed specifications.

[0101] Operation at low temperatures (e.g., less than 350° C.) also has an added advantage of corrosion mitigation of the reactor metallurgy. For most metals and alloys used in the commercial reactors, corrosion rates start to increase at reactor temperatures over 300° C. It has been found that the efficiency of dechlorination according to the disclosed embodiments is good at reactor temperatures below 350° C., and the dechlorination process works with a sulphided Co—Mo catalyst on an alumina support even as low as 260° C., with the chlorides in the treated product being less than 1 ppm. Thus, the metallurgy corrosion issue is mitigated and longer equipment life is possible while achieving dechlorination to levels desirable for feed to steam cracker **50**. The processes disclosed herein have been demonstrated to work at pressures as low as 20 barg, which is a less severe condition than the conditions typically employed with a commercial hydrotreating catalyst. Ability to operate at lower pressures reduces the required pressure rating for process vessels (e.g., the hydroprocessing reactor **20**) and provides an opportunity for reduced investment costs.

[0102] The disclosed embodiments also demonstrate olefins in the hydrocarbon product are reduced typically to less than 1 wt % of the treated hydrocarbon stream **32** from a feed olefin concentration of 20 wt % or more in the hydrocarbon stream **12**.

[0103] Thus, the disclosed embodiments achieve the pyrolysis of plastics and also requirements of chloride content, olefin content, and boiling end point of the feed for a steam cracker starting from a plastic pyrolysis feed.

EXAMPLES

[0104] The subject matter having been generally described, the following examples are given as particular embodiments

of the disclosure and to demonstrate the practice and advantages thereof. It is understood that the examples are given by way of illustration and are not intended to limit the specification of the claims to follow in any manner.

[0105] Examples 1 to 9 were conducted in a fixed bed reactor located inside a 3-zone split-tube furnace. The reactor internal diameter was 13.8 mm and had concentrically located bed thermowell of 3 mm outer diameter. The reactor was 48.6 cm long. Commercial hydroprocessing catalyst of Co—Mo on alumina (8 g bone dry weight) was broken along the length to particles of 1.5 mm long and diluted with SiC in the ratio of 60% SiC to 40% catalyst to give a mean particle diameter of 0.34 mm. This was done to avoid slip through of the chlorides due to wall slip or channeling in the small diameter reactor. Pre-heating bed and post-catalyst inert beds was provided in the form of 1 mm glass beads. The catalyst bed temperature was controlled to isothermal by varying the controlled furnace zone skin temperatures. The catalyst was sulphided using 3 wt % S in hexadecane (S was introduced as dimethyl disulphide). Liquid feed (i.e., the hydrocarbon stream) was fed through a metering pump and H_2 gas was fed using a mass flow controller. The reactor effluent (i.e., the hydrocarbon product) gases were cooled to condense out the liquids (i.e., the treated hydrocarbon stream in the form of a liquid product) under pressure while allowing non-condensed gases (e.g., containing chloride(s), chlorine, hydrogen sulphide, or combinations thereof) to separate., Following liquid condensation, the pressure of the liquids was reduced and effluent gas flow was measured using a drum-type wet gas meter. The effluent gas flow was analyzed using a refinery gas analyzer (a custom gas analyzer from M/s AC Analyticals BV). The liquid product olefin content was determined using a Detailed Hydrocarbon Analyzer GC (DHA) and a boiling point characterization was obtained using a SIMDIS GC. The liquid product chloride content was measured using a Chlora M-series analyzer (monochromatic wavelength dispersive X-ray Fluorescence technique, ASTM D7536).

Example 1

[0106] In Example 1, a hydrocarbon feed mixture was prepared by mixing 30 wt % n-hexadecane, 10 wt % i-octane, 20 wt % 1-decene, 20 wt % cyclohexane, and 20 wt % ethyl benzene. Dimethyl disulphide, 2-chloropentane, 3-chloro-3-methyl pentane, 1-chlorohexane, (2-chloroethyl) benzene, and chlorobenzene were then added to give 205 ppmw organic chlorides and a sulphur content of 2 wt % S in the combined feed mixture. This combined feed mixture was used as the hydrocarbon stream which was contacted with the hydroprocessing catalyst in the packed bed reactor as mentioned above in the presence of H_2 at conditions of 280° C. reactor temperature, 60 barg reactor pressure, 0.92 hr^{-1} WHSV, and 414 NL/L H_2/HC flow ratio. The liquid product (i.e., the treated hydrocarbon stream) was analyzed in a DHA wherein molecules lighter than C_{13} are injected into the GC column and heavier than C_{13} are flushed out. The normalized composition of liquid product as measured by DHA was paraffins (26.24 wt %), i-paraffins (17.28 wt %), olefins (0 wt %), naphthenes (33.61 wt %), and aromatics (22.88 wt %). SIMDIS analysis of liquid product indicates that 78 wt % of the liquid product boils at 180° C., and immediately at 79 wt %, the boiling point shifts to 286° C.; indicating that 22 wt % (i.e. 100-78=22) of the liquid product is hexadecane. This implies out of 30 wt % hexadecane in the feed (calculated based on the feed excluding chloride and sulphides, since dimethyl disulphide is converted to gases, the chloride compounds are dechlorinated so as to contribute less than 0.5 wt % of the product), 8 wt % of hexadecane was hydrocracked to lower products. As mentioned before, this 22 wt % does not get analyzed in DHA. This 22 wt % hexadecane unaccounted in DHA composition is added to the liquid product analyzed by DHA (DHA composition multiplied by 0.78 fraction that was injected into DHA) and the resulting composition of the liquid product is 42.47 wt % paraffins, 13.48 wt % i-paraffins, 0 wt % olefins, 26.21 wt % naphthenes and 17.84 wt % aromatics. In addition, the chloride content of the liquid product was 0.09 ppmw.

[0107] Example 1 demonstrates it is possible to simultaneously dechlorinate, hydrogenate, and hydrocrack a PIONA hydrocarbon stream containing heavy hydrocarbon molecules (e.g., hexadecane), a chloride content of more than 200 ppm, and an olefin content of 20 wt % (calculated based on the feed excluding chloride and sulphides) such that a portion of the heavy hydrocarbon molecules are hydrocracked, chloride content is reduced to less than 1 ppm, and olefins are completely removed (0 wt % in the liquid product). Comparing feed and liquid product compositions, it can be said that paraffins, i-paraffins, and naphthenes have increased in concentration, while aromatics have reduced in concentration and olefins were completely depleted. This clearly indicates hydrocracking of hexadecane as well as hydrocracking of olefins in feed. Thus, Example 1 additionally demonstrates olefins are hydrocracked in addition to being hydrogenated.

[0108] The DHA analysis summary by carbon number for the liquid product is shown below:

Carbon No.	n-Paraffins, wt %	i-Paraffins, wt %	Olefins, wt %	Naphthenes, wt %	Aromatics, wt %	Total, wt %
2						
3						
4		0.015				0.015
5	0.012					0.012
6	0.016	0.18		27.136	0.048	27.217
7						0
8	0.145	14.226		0.547	21.979	36.896
9		0.079		5.901	0.834	6.814
10	26.01	2.93				0.039
11						
12						
Total, wt %	26.221	17.268		35.584	22.86	99.933
Unknown						0.053
Heavies						0.013

Example 2

[0109] Example 2 explores the effect of operating pressure on hydrocracking performance. A hydrocarbon feed mixture was prepared by mixing 30 wt % n-hexadecane, 10 wt % i-octane, 20 wt % 1-decene, 20 wt % cyclohexane, and 20 wt % ethyl benzene. Dimethyl disulphide, 2-chloropentane, 3-chloro-3-methyl pentane, 1-chlorohexane, (2-chloroethyl) benzene, and chlorobenzene were then added to give 205 ppmw organic chlorides and a sulphur content of 2 wt % S in the combined feed mixture. This combined feed mixture was used as a hydrocarbon stream which was contacted the sulphided hydroprocessing catalyst in the packed bed reactor as mentioned above in the presence of H_2 at conditions of 300° C. reactor temperature, 0.92 hr^{-1} WHSV, and 414 NL/L

H_2/HC flow ratio. Three different pressure conditions were studied: 60 barg for Example 2A, 20 barg for Example 2B, and 10 barg for Example 2C. The liquid products (i.e., the treated hydrocarbon streams) for each of Examples 2A to 2C were analyzed using SIMDIS, and the results are shown below:

Example 2A Liquid Product 60 barg		Example 2B Liquid Product 20 barg		Example 2C Liquid Product 10 barg	
Cut, wt %	T, ° C.	Cut, wt %	T, ° C.	Cut, wt %	T, ° C.
0	61.4	0	52.0	0	61.4
5	72.0	5	61.4	5	72.0
10	72.0	10	72.0	10	72.0
15	72.0	15	72.0	15	72.0
20	72.0	20	72.0	20	72.0
25	72.0	25	72.0	25	72.0
30	87.6	30	72.0	30	72.0
35	87.6	35	72.0	35	87.6
40	87.6	40	87.6	40	87.6
45	87.6	45	87.6	45	132.0
50	87.6	50	134.6	50	137.2
55	129.4	55	137.2	55	139.8
60	134.6	60	139.8	60	139.8
65	139.8	65	142.4	65	161.2
70	170.6	70	163.2	70	173.8
75	176.0	75	175.4	75	177.0
79	177.6	80	179.0	78	178.0
80	278.6	83	180.6	80	271.6
85	289.2	85	279.6	85	288.2
90	292.0	90	291.0	90	291.6
95	294.0	95	294.6	95	294.0
99	295.4	99	296.8	99	295.4
100	295.6	100	297.0	100	295.6

[0110] The DHA analysis summary of the liquid product boiling below 240° C. is shown below:

Example No.	n-Paraffins, wt %	i-Paraffins, wt %	Olefins, wt %	Naphthenes, wt %	Aromatics, wt %	Unknown, wt %	Heavies, wt %
2A	22.507	19.415	0.183	31.159	17.912	0.131	0.693
2B	19.544	21.513	0.047	30.490	27.465	0.315	0.626
2C	21.368	21.281	0.000	24.687	30.719	0.355	1.591

[0111] The results provided in the tables above indicate that 20 wt % or less of the liquid product for each of Examples 2A to 2C boils in the hexadecane boiling point range. In contrast, the feed contained 30 wt % hexadecane (calculated based on the feed excluding chlorides and sulphides). Hence, at all pressures, hydrocracking of heavy hydrocarbon molecules (e.g., hexadecane) using a hydrogenation catalyst is demonstrated.

[0112] The corresponding chloride contents of the liquid product (i.e., treated hydrocarbon stream) at 60 barg, 20 barg, and 10 barg were respectively 0.11 ppmw, 0.09 ppmw, and 0.12 ppmw.

[0113] The liquid product (analyzed in DHA) for Example 2A (60 barg) contained 0.183 wt % olefins, for Example 2B (20 barg) contained 0.047 wt %, and for Example 2C (10 barg) contained 0 wt % olefins. At lower pressures, a significant increase in aromatics is observed.

[0114] Example 2 demonstrates it is possible to simultaneously dechlorinate and hydrocrack a PIONA hydrocarbon stream containing heavy hydrocarbon molecules (e.g., hexadecane) and a chloride content of more than 200 ppmw such that a portion of the heavy hydrocarbon molecules are hydrocracked and chloride content is reduced to less than 1 ppm for all pressures tested.

Example 3

[0115] In Example 3, a hydrocarbon feed mixture was prepared to contain 30 wt % n-hexadecane, 10 wt % i-octane, 20 wt % 1-decene, 20 wt % cyclohexane and 20 wt % ethyl benzene. To this the organic chlorides mentioned in Example 2 above were added along with dimethyl disulphide to give 205 ppm organic chlorides and 2 wt % S in the mixture. This feed was used as a hydrocarbon stream which was contacted with the sulphided hydroprocessing catalyst in the packed bed reactor as mentioned above in the presence of H_2 at conditions of 260° C. reactor temperature, 60 barg reactor pressure, 0.92 hr^{-1} WHSV and 414 NL/L H_2/HC flow ratio. The liquid product (i.e., the treated hydrocarbon stream) contained 0.1 ppmw chloride.

[0116] Example 3 demonstrates the effective removal of chloride compounds from a hydrocarbon stream at very low temperatures.

Example 4

[0117] In Example 4, a feed was prepared by mixing plastic pyrolysis oil (36.3 g) with n-hexadecane (240 g), and then adding dimethyl disulphide (the sulphide) and 1-chlorohexane (the chloride compound) to give a sulphur content of 2.34 wt % and 836 ppm chloride in the feed. This feed was used as a hydrocarbon stream which was contacted with the hydroprocessing catalyst in the packed bed reactor as mentioned above in the presence of H_2 under several operating conditions as provided in the table below:

T, ° C.	P, barg	WHSV, hr^{-1}	H_2/HC, NL/L	Cl, ppm in liquid product
300	60	0.92	414	0.32
300	40	0.92	414	0.87
350	40	0.92	414	3.42
400	40	0.92	414	3.15

[0118] The gas composition of the reactor effluents is as below and indicates LPG gases are formed at temperatures close to 400 deg C.:

T, ° C.	P, barg	WHSV, hr^{-1}	H_2/HC, NL/L	Cl, ppm in liquid product	H_2, mole %	CH_4, mole %	C_2H_6, mole %	C_3H_8, mole %	n-C_4H_{10}, mole %	i-C_4H_{10}, mole %
300	40	0.92	414	0.87	96.63	3.25	0.12	—	—	—
350	40	0.92	414	3.42	95.32	4.48	0.2	—	—	—
400	40	0.92	414	3.15	93.96	5.21	0.45	0.23	0.08	0.07

[0119] Example 4 demonstrates it is possible to dechlorinate a hydrocarbon stream containing plastic pyrolysis oil and having chloride compounds from a chloride content of more than 800 ppm chlorides to less than 5 ppm in the liquid product. As can be seen from the above table, the chloride content of the liquid product (i.e., the treated hydrocarbon stream) increases when the reactor bed temperature is increased to at or above 350° C. At temperatures below 350° C., Example 4 demonstrates removal of chloride compounds to chloride contents less than 3 ppm, and even sub-ppm levels.

Example 5

[0120] In Example 5, a feed was prepared by mixing plastic pyrolysis oil (36.3 g) with n-hexadecane (240 g), and then adding dimethyl disulphide (the sulphide) and 1-chlorohexane (the chloride compound) to give a sulphur content of 2.34 wt % and 836 ppm chloride in the feed. This feed was used as a hydrocarbon stream which was contacted with the hydroprocessing catalyst (chlorinated and sulphided Co—Mo on alumina) in the packed bed reactor as mentioned above in the presence of H_2 under operating conditions of 40 barg reactor pressure, 400° C. reactor bed temperature, 0.92 hr^{-1} WHSV, and a hydrogen to hydrocarbon ratio of 414 NL/L. The product from this reactor had 2.94 ppmw chloride. A polishing step was performed by mixing 5 g of the product with 1 g of gamma alumina (the adsorbent) at room temperature for 1 hr to monitor adsorptive performance. The supernatant from this polishing step was analyzed for chloride content, which was found to have 1.46 ppmw chloride. Thus a chloride content from 2.94 ppmw obtained from a near end-of-run condition for the hydroprocessing catalyst (a border-line value for steam cracker feed) was reduced in the polishing step to an acceptable chloride level of 1.46 ppmw.

Example 6

[0121] In Example 6, a hydrocarbon feed mixture was prepared to contain 30 wt % n-hexadecane, 10 wt % i-octane, 20 wt % 1-decene, 20 wt % cyclohexane, and 20 wt % ethyl benzene. To this were added dimethyl disulphide, 2-chloropentane, 3-chloro-3-methyl pentane, 1-chlorohexane, (2-chloroethyl) benzene and chlorobenzene to give 205 ppm organic chlorides and 2 wt % S in the mixture. A dechlorination step was performed by mixing 5 g of this feed mixture with 1 g of gamma alumina at room temperature for 1 hr to monitor adsorptive performance. The supernatant was measured for its chloride content, which was found to be 191 ppmw.

[0122] Example 6 demonstrates that dechlorination by adsorption for hydrocarbon streams contemplated in this disclosure as feeding to a first hydroprocessing reactor does not effectively reduce the chloride content to levels required for steam crackers. However, Example 6 and Example 5 demonstrate adsorption units may be useful in the disclosed polishing zone, alone or upstream or downstream of a second hydroprocessing reactor.

Example 7

[0123] In Example 7, a feed was prepared by adding dimethyl disulphide (the sulphide) and 2-chloropentane, 3-chloro-3-methyl pentane, 1-chlorohexane, (2-chloroethyl) benzene, and chlorobenzene (the chloride compounds) to n-hexadecane to give a sulphur content of 2 wt % in the mixture and a chloride content of 1,095 ppm in the mixture. Each of the chloride compounds contributed approximately 220 ppm to the feed mixture. This feed was used as a hydrocarbon stream which was contacted with the hydroprocessing catalyst in the packed bed reactor as mentioned above in the presence of H_2 at 300° C. reactor bed temperature, 40 barg reactor pressure, 414 NL/L H_2/HC flow ratio, and 0.92 hr^{-1} weight hourly space velocity (WHSV). The chloride content of the liquid product (i.e., treated hydrocarbon stream) was 0.23 ppmw.

[0124] Example 7 demonstrates it is possible to dechlorinate a hydrocarbon stream containing no olefins and chloride compounds from a chloride content of about 1,100 ppm chlorides to the sub-ppm level in the in the liquid product.

Example 8

[0125] In Example 8, a hydrocarbon feed mixture was prepared by mixing 30 wt % n-hexadecane, 10 wt % i-octane, 20 wt % 1-decene, 20 wt % cyclohexane, and 20 wt % ethyl benzene. Dimethyl disulphide, 2-chloropentane, 3-chloro-3-methyl pentane, 1-chlorohexane, (2-chloroethyl) benzene, and chlorobenzene were then added to give 1,100 ppmw organic chlorides and a sulphur content of 2 wt % S in the combined feed mixture. This combined feed mixture was used as the hydrocarbon stream which was contacted with the hydrogenating catalyst in the packed bed reactor as mentioned above in the presence of H_2 at conditions of 300° C. reactor temperature, 40 barg reactor pressure, 0.92 hr^{-1} WHSV, and 414 NL/L H_2/HC flow ratio. The liquid product contained 0.23 ppmw chlorides and paraffins of 22.569 wt %, paraffins of 19.752 wt %, olefins of 0.114 wt %, naphthenes of 33.242 wt %, aromatics of 23.7 wt %, unknowns of 0.16 wt % and heavies of 0.463 wt % as per DHA analysis. This again demonstrates the dechlorination of liquid at much higher chloride concentrations.

[0126] The SIMDIS of liquid product resulted in the following distribution and also indicated hydrocracking:

Cut, wt %	T, ° C.
0	61.4
5	72

-continued

Cut, wt %	T, ° C.
10	72
15	72
20	72
25	72
30	72
35	72
40	87.6
45	87.6
50	132
55	134.6
60	137.2
65	142.4
70	170.6
75	175.4
80	177
85	287
90	290
95	292.2
99	293.4
100	293.8

[0127] DHA Group type analysis of the liquid product by carbon number (in wt %) is as below:

Carbon No.	n-Paraffins, wt %	i-Paraffins, wt %	Olefins, wt %	Naphthenes, wt %	Aromatics, wt %	Total, wt %
2						0
3						0
4	0.008	0.056				0.064
5	0.033	0.021				0.054
6	0.035	0.05		26.925	0.072	27.082
7	0.013	0.008		0.012		0.033
8	0.287	13.892		0.951	21.97	37.1
9		0.172	0.114	5.265	1.623	7.174
10	22.161	5.553		0.089	0.035	27.838
11	0.025					0.025
12	0.007					0.007
				Oxygenates		
				Heavies		0.464
				Unknown		0.16
				Total, wt %		100.001

[0128] In this example, the yield of liquid products was 95.5 wt % of the total products. The balance was gas products.

Example 9

[0129] In Example 9, a n-hexadecane feed mixture was prepared by mixing n-hexadecane with dimethyl disulphide, 2-chloropentane, 3-chloro-3-methyl pentane, 1-chlorohexane, (2-chloroethyl) benzene, and chlorobenzene to give 1,034 ppm of chlorides and 2 wt % Sulphur in the feed. This combined feed mixture was used as the hydrocarbon stream which was contacted with the hydrogenating catalyst in the packed bed reactor as mentioned above in the presence of H_2 at conditions of 300° C. reactor temperature, 40 barg reactor pressure, 0.92 hr^{-1} WHSV, and 414 NL/L H_2/HC flow ratio. The liquid product contained 0.3 ppmw chlorides and paraffins of 22.569 wt %, i-paraffins of 19.752 wt %, olefins of 0.114 wt %, naphthenes of 33.242 wt %, aromatics of 23.7 wt %, unknowns of 0.16 wt % and heavies of 0.463 wt % as per DHA analysis. This again demonstrates the dechlorination of liquid at high chloride concentrations to sub-ppm levels.

[0130] The SIMDIS of liquid product resulted in the following distribution and also indicated hydrocracking to the extent of about 15 wt % on a chloride and sulphide-free feed basis:

Cut (wt %)	Temp (° C.)
0	61.4
5	129.4
10	161.2
13	170.6
14	260.2
15	272.4
20	285.2
25	287.4
30	289
35	290.2
40	291.2
45	292.2
50	293
55	293.8

-continued

Cut (wt %)	Temp (° C.)
60	294.4
65	295
70	295.6
75	296.2
80	297
85	297.4
90	297.8
95	298.2
99	298.8
100	310.8

[0131] DHA Group type analysis of the liquid product by carbon number (in wt %) is as below and indicates conversion of n-hexadecane to various PIONA components:

Carbon No.	n-Paraffins, wt %	i-Paraffins, wt %	Olefins, wt %	Naphthenes, wt %	Aromatics, wt %	Total, wt %
2	0.005					0.005
3	0.006					0.006
4	0.019	0.098				0.118
5	0.068	0.064				0.132
6	0.072	0.133		25.607	0.11	25.922
7	0.016	0.034				0.051
8	0.401	13.31		1.268	21.179	36.157
9		0.133	0.136	5.53	2.449	8.248
10	19.165	8.19		0.213	0.049	27.617
11	0.03					0.03
12	0.011					0.011
				Oxygenates		
				Heavies		1.413
				Unknown		0.29
				Total, wt %		100

Example 10

[0132] Example 10 shows a high severity operation for the pyrolysis unit **10**. An amount of 1.5 g of plastics feed and 9 g of catalyst mixture having a composition comprised of 37.5 wt. % ZSM-5 catalyst, with the remainder being spent FCC catalyst, were used in pyrolysis conversions in a fluidized bed reactor. Details regarding the experimental facility for Example 10 are described in U.S. Patent Publication No. 2014/0228606A1, which is incorporated herein by reference in its entirety. The mixed plastics feed had the following composition:

Material	Amount, wt %
HDPE	19
LDPE	21
PP	24
C_4-LLDPE	12
C_6-LLDPE	6
PS	11
PET	7

[0133] The reaction temperature at start of reaction was 670° C. The one-minute average bed temperatures achieved was 569.6° C. The Catalyst/Feed (C/F) ratio was 6. Fluidization N_2 gas flow rate used was 175N cc/min. Overall aromatic and liquid i-paraffin product yields and aromatic and liquid i-paraffin content in liquid product boiling below 240° C. were 31.6 wt % and 5.76 wt %, respectively. Their respective concentrations in the liquid product boiling below 240° C. was 74.72 wt % and 13.22 wt %. The yield of light gas olefins, i.e., the sum of yields of ethylene, propylene and butenes was 32.69 wt %, and the total yield of gas products was 45.17 wt %.

[0134] The DHA analysis of the liquid product boiling below 240° C. was:

Carbon No.	n-Paraffins, wt %	i-Paraffins, wt %	Olefins, wt %	Naphthenes, wt %	Aromatics, wt %	Total, wt %
5	0.013	0.02	0.169	0.031		0.233
6	0.101	0.219	1.031	0.318	5.28	9.113
7	0.254	1.243	2.267	0.665	17.188	21.618
8	0.544	2.703	0.354	1.125	30.339	35.066
9	0.22	3.98	0.107	1.44	10.95	16.70
10	0.12	2.07		0.217	3.89	6.30
11	0.10	2.53		0.299	1.53	4.39
12	0.05	0.46			3.37	3.88
13	0.03					0.03
Unknown						2.69
Total, wt %	1.42	13.22	3.928	4.03	74.72	97.32
Total, wt % on Aromatics-Free Basis	6.3	58.5	17.4	17.8		

[0135] The yield of heavy products boiling above 370° C. was 0.86 wt %.

Example 11

[0136] Example 11 shows a high severity operation for the pyrolysis unit **10**, operated in a hydrogen-assisted hydropyrolysis mode. An amount of 1.5 g of mixed plastics was mixed with 9 g of a catalyst mixture comprising 62.5 wt % spent FCC catalyst and 37.5 wt % ZSM-5 zeolite catalyst. The combined mixture was then fed to the fluidized bed reactor described in Example 1. The plastic feed was in the form of a 200 micron plastic powder. A mixture of 10% H_2 in N_2 was employed as the carrier gas at a flow rate of 175 N cc/min.

[0137] Studies were conducted by maintaining the reactor bed temperature, before feed and catalyst mixture was introduced, at 600° C., 635° C., and 670° C., respectively, i.e., at 3 different starting temperatures. Studies were also conducted at the same conditions as before with 100% N_2 as carrier gas. For each of the temperature conditions studied, a new set of catalyst and feed mixture was prepared and used.

[0138] The tables below summarize the experimental findings, where all study used a mixed plastic feed and spent FCC (62.50 wt %)+ZSM-5 zeolite catalyst (37.5 wt %) as the pyrolysis catalyst:

	Hydro-pyrolysis 1	Pyrolysis 1	Hydro-pyrolysis 2	Pyrolysis 2	Hydro-pyrolysis 3	Pyrolysis 3
Feed Weight Transferred, g	1.50	1.50	1.50	1.50	1.50	1.50
Bone-Dry Catalyst Feed, g	9.05	8.95	9.05	9.05	9.01	8.95
C/F ratio, g/g	6.03	6.0	6.03	6.03	6.00	6.0
Reaction Start Temperature, ° C.	600	600	635	635	670	670
1 min Avg. Reactor Bed Temperature, ° C.	482	472	525	525	567	570
Yield, wt %, based on H_2-free product						
Methane	0.92	0.40	1.00	0.56	3.20	0.99
Ethane	0.87	0.43	0.73	0.52	0.69	0.74
Ethylene	6.17	3.68	6.50	5.07	6.36	5.78
Carbon Dioxide	1.29	1.63	1.54	1.93	1.85	1.91
Propane	3.90	4.26	3.15	3.58	3.11	3.49
Propylene	12.76	11.05	13.63	12.93	14.67	14.75
i-Butane	4.56	4.99	3.85	4.75	3.77	3.53
n-Butane	2.67	1.84	2.07	1.57	1.31	1.41
t-2-Butene	3.16	2.67	3.10	2.89	2.99	3.01
1-Butene	1.75	1.63	1.79	1.79	1.90	2.01
i-Butylene	4.68	4.55	4.56	4.76	4.72	4.97
c-2-Butene	2.22	1.92	2.19	2.09	2.14	2.21
Carbon Monoxide	1.25	0.10	0.35	0.00	0.80	0.25
Gasoline	43.83	45.34	41.66	42.42	42.11	49.30
Diesel	5.75	9.14	7.55	8.37	4.73	5.16
Heavies	0.56	1.64	0.78	0.88	0.49	0.86
Coke	4.67	4.73	5.55	5.88	5.12	5.64

[0139] Overall, yield of gas products has increased and liquid products have decreased indicating higher conversions to lighter products.

	Hydro-pyrolysis 1	Pyrolysis 1	Hydro-pyrolysis 2	Pyrolysis 2	Hydro-pyrolysis 3	Pyrolysis 3
C_1-C_4 Yield, wt %	45.2	39.1	44.5	42.5	47.5	45.0
Liquid Yield, wt %	50.1	56.1	50.0	51.7	47.3	49.3
Coke Yield, wt %	4.7	4.7	5.6	5.9	5.1	5.6

[0140] As can be seen, the yield of light gas olefins per unit amount of coke deposited on the catalyst is higher in the case of hydropyrolysis. This implies that more light gas olefins would be produced in a circulating fluid catalytic cracking type of unit. In these units, performance is compared on a constant coke yield basis. This is because the amount of coke burnt off in the regenerator is limited by the air availability in the regenerator and as a result the regenerated catalyst returned back to the riser would have more or less coke on it which would in turn affect its activity in the riser.

[0141] The total aromatics as well as C_6-C_8 aromatics yield per unit amount of coke deposited is also higher in the case of hydropyrolysis. This implies in hydropyrolysis more aromatic products would be produced in a circulating fluid catalytic cracking type of unit.

	Hydro-pyrolysis 1	Pyrolysis 1	Hydro-pyrolysis 2	Pyrolysis 2	Hydro-pyrolysis 3	Pyrolysis 3
Total Aromatics Yield Boiling Below 240° C., wt %	32.42	31.39	32.81	31.83	35.09	32.35
C_6-C_8 Aromatics Yield, wt %	23.81	23.20	24.44	22.63	26.33	22.87
Total Aromatics/Coke, wt ratio	6.9	6.6	5.9	5.4	6.9	5.7
(C_6-C_8 Aromatics)/Coke, wt ratio	5.1	4.9	4.4	3.9	5.1	4.1
Light gas olefins/Coke, wt ratio	6.6	5.4	5.7	5.0	6.4	5.8
C_4 Olefins, wt %	11.81	10.76	11.64	11.54	11.77	12.20
C_3 Olefins, wt %	12.76	11.05	13.63	12.93	14.67	14.75
C_2 Olefins, wt %	6.17	3.68	6.50	5.07	6.36	5.78
Total Olefins, wt %	30.74	25.49	31.77	29.54	32.80	32.72

[0142] To summarize, more high value chemicals (i.e. light gas olefins and aromatics) are produced in hydropyrolysis as compared to pyrolysis done without use of hydrogen carrier gas.

[0143] Additional benefits include:

[0144] a. increased olefinicity of product gases;

[0145] b. increased ratio of propylene/propane as compared to ethylene to ethane and butenes/butanes;

[0146] c. lower hydrogen transfer index (i.e. ratio of C_3 and C_4 saturates/C_3 olefins) in hydropyrolysis as compared to use of nitrogen only as carrier gas; and

[0147] d. more C_4 iso-olefins are produced in as compared to 1-butene in hydropyrolysis (i.e. isomerization index is lower).

	Hydro-pyrolysis 1	Pyrolysis 1	Hydro-pyrolysis 2	Pyrolysis 2	Hydro-pyrolysis 3	Pyrolysis 3
Hydrogen Transfer Index (HTI)	0.87	1.00	0.67	0.77	0.56	0.57
Isomerization Coefficient	0.174	0.178	0.182	0.184	0.192	0.197
C_2 Olefin/C_2 Saturated Hydrocarbon	7.1	8.6	8.9	9.8	9.2	7.9
C_3 Olefin/C_3 Saturated Hydrocarbon	3.3	2.6	4.3	3.6	4.7	4.2
C_4 Olefin/C_4 Saturated Hydrocarbon	1.6	1.6	2.0	1.8	2.3	2.5
% of i-C_4/Total C_4	23.9	28.4	21.9	26.6	22.4	20.6
% of Olefins/Total Gases	68.0	65.1	71.5	69.6	69.0	72.6
% Olefins/% Saturated Hydrocarbons	2.6	2.2	3.2	2.8	3.7	3.6

[0148] Detailed hydrocarbon analysis (DHA) of liquid products below 240° C. is in the table below:

	Hydro-pyrolysis 1	Pyrolysis 1	Hydro-pyrolysis 2	Pyrolysis 2	Hydro-pyrolysis 3	Pyrolysis 3
Paraffins, wt %	1.184	1.435	1.207	1.170	1.108	1.420
i-Paraffins, wt %	10.161	12.389	9.598	12.120	8.545	13.330
Olefins, wt %	2.944	9.159	2.555	4.858	0.976	3.900
Naphthenes, wt %	3.727	5.390	3.135	3.867	2.329	4.030
Aromatics, wt %	73.968	69.233	78.758	75.037	83.315	74.720
BTX + EX content in liquid boiling below 240° C.	54.32	51.17	58.67	53.35	62.52	52.81

Example 12

[0149] Example 12 shows a low severity pyrolysis operation. The experimental set up consisted of a stainless steel reactor pot followed by a fixed bed (tubular) reactor packed with ZSM-5 zeolite extrudates and the outlet of this tubular reactor was connected to a stainless steel condenser/receiver tank. The reactor pot was heated using heating tapes with temperature controller. An amount of 100 g of mixed plastic as per composition provided in Example 10 was charged along with ZSM-5 zeolite catalyst powder of 75 microns average particle size into the reactor and the heating was started. The reactor temperature was maintained constant at 450° C. for a period of 1 hr. The effluent from this reactor pot was continuously passed through the hot tubular reactor packed with ZSM-5 extrudates and maintained at 450° C. The product from the tubular reactor was sent to the receiver. The outgoing gas from the receiver was passed through NaOH scrubber and then diluted with N_2 and vented out through a carbon bed. Two different catalyst loadings were tested as below:

[0150] a. Experiment 1: Equivalent to 5 wt % of the feed was the catalyst charged in the tubular reactor and 5 wt % equivalent catalyst was charged in the reactor pot (i.e. 10 wt % of catalyst overall).

[0151] b. Experiment 2: Equivalent to 5 wt % of the feed was the catalyst charged in the tubular reactor and 15 wt % equivalent catalyst was charged in the reactor pot (i.e. 20 wt % catalyst overall).

[0152] FIG. **2** shows the boiling point distribution of the liquid product obtained indicated that 95 wt % of the liquid product boiled below 370° C.

[0153] The DHA analysis of the liquid product boiling below 240° C. indicated significant presence of olefins and aromatics:

Product Composition	Liquid Product boiling below 240° C. from Experiment 1, wt %	Liquid Product boiling below 240° C. from Experiment 2, wt %
Paraffins	6.5	3.1
i-Paraffins	17.6	11.7
Olefins	11.4	7.4
Naphthenes	3.8	2.5
Aromatics	47.9	66.3
Heavies	3.1	3.6
Unknown	9.8	5.5

Example 13

[0154] Example 13 demonstrates a low severity pyrolysis with PVC present in the feed. An amount of 100 g of mixed plastic feed as per the composition provided in Example 10 above was mixed with 2 wt % of ZSM-5 zeolite catalyst powder and heated in a round bottom flask fitted with a condenser. The round bottom flask was maintained at 360° C. for 1 hour. The liquid product had 60 ppmw chlorides. A similar experiment conducted with head space purging of the round bottom flask with N_2 gas provided a liquid product with no detectable chloride content. Chloride content in the liquid products was determined by fusing liquid products in NaOH followed by extraction in water and measurement of the resultant aqueous solution chloride content using ion chromatography. This example also demonstrates the possibility of head space purging in a pyrolysis unit to enhance dechlorination.

Example 14

[0155] Example 14 demonstrates a low severity pyrolysis process in a fluidized bed. An amount of 1.5 g of mixed plastic feed as per composition provided in Example 10 was mixed with 9.05 g of a catalyst mixture containing 62.5 wt % of FCC spent catalyst and 37.5 wt % of ZSM-5 Zeolite catalyst. This combined mixture was charged into the fluidized bed reactor described in Example 10. Before charging of feed and catalyst mixture the reactor was at a temperature of 450° C. The reactor temperature decreased as the feed was charged and later increased to the set point of 450° C. Data provided below also captures the temperature profile in the reactor bed as a function of time. The 1 min, 6 min, and 10 min average bed temperatures were 333° C., 369° C., and 395° C., respectively. The 1 min average represents the average reaction temperature severity when most temperature changes occur in the reactor. The 6 min average represents the temperature severity when the reactor temperature has recovered and reached the previously set value. Most of the conversion in the low severity case was expected to have been completed at the 6 min average. The data below shows that the liquid product is highly aromatic, the heavier than 370° C. boiling material is only about 2 wt %, and more than 90 wt % of the liquid product boils below 350° C.

[0156] The product yield data is shown in the table below:

	Amount, wt %
H_2	0.03
Methane	0.00
Ethane	0.00
Ethylene	2.25
Carbon Dioxide	1.54
Propane	3.39
Propylene	6.92
i-Butane	6.48
n-Butane	1.67
t-2-Butene	1.71
1-Butene	1.04
i-Butylene	3.37
c-2-Butene	1.26
Carbon Monoxide	0.00
Gasoline	45.28
Diesel	17.64
Heavies	2.08
Coke	5.33

[0157] The boiling point distribution is in the table below:

Mass %	Boiling Point, ° C.
0.0	108.6
5.0	156.0
10.0	164.0
15.0	175.6
20.0	180.0
25.0	187.6
30.0	190.2
35.0	198.8
40.0	203.6
45.0	209.2

-continued

Mass %	Boiling Point, ° C.
50.0	220.2
55.0	227.0
60.0	232.0
65.0	246.0
70.0	254.2
75.0	267.4
80.0	281.8
85.0	300.6
90.0	332.0
95.0	371.6
99.0	431.2
100.0	454.2

[0158] The detailed analysis of the liquid product is shown in the table below:\

Carbon No.	n-Paraffins, wt %	i-Paraffins, wt %	Olefins, wt %	Naphthenes, wt %	Aromatics, wt %	Total, wt %
3			0.003			0.003
4	0.007	0.012	0.041			0.06
5	0.032	0.077	0.325	0.095		0.529
6	0.173	0.566	1.025	1.009	4.757	7.53
7	0.379	1.379	1.547	2.095	19.393	24.793
8	0.398	2.443	0.198	1.518	28.466	33.023
9	0.046	1.911	0.134	0.958	11.254	14.303
10	0.019	0.916	0.02	0.156	4.448	5.559
11	0.022	2.114		0.029	1.621	3.786
12	0.029	0.199		0.057	3.884	4.169
13		0.078	0.111			0.189
Unknown Heavies						2.842
						3.214
Total, wt %	1.105	9.695	3.404	5.917	78.823	93.944
Total, wt % on Aromatics-Free Basis	5.49	48.18	16.92	29.41		

Example 15

[0159] Example 15 demonstrates how a steam cracker is used in combination with pyrolysis and hydroprocessing unit. Gases (C_1-C_4) from a pyrolysis unit and hydroprocessing facility are fed to gas crackers. Liquids from the hydroprocessing facility are fed to liquid steam crackers.

[0160] Gas steam cracking of a feed consisting of 16.75 w % ethane, 34.62 wt % propane, 27.62 wt % isobutene and 21 wt % butane, carried out at a steam cracker coil outlet temperature of 840° C., a steam/hydrocarbon ratio of 0.35, and a coil outlet pressure of 1.7 bar, resulted in a product having 0.48 wt % acetylene, 34.1 wt % ethylene, 12.21 wt % propylene, and 2.41 wt % butadiene, among other products.

[0161] Steam cracking a naphtha feed (boiling cut from initial boiling point to 220° C.) having 20.3 wt % paraffin, 27.9 wt % i-paraffins, 14.5 wt % aromatics, and 36.9 wt % naphthenes at a coil outlet temperature of 865° C., a coil outlet pressure of 1.7 bar, and a steam to oil ratio of 0.5 resulted in a product having 25.86 wt % ethylene, 12.14 wt % propylene, and 4.98 wt % butadiene.

[0162] Steam cracking of gas oils (>220° C. boiling point to 380° C.) resulted in a product having **24** wt % ethylene, 14.45 wt % propylene, 4.7 wt % butadiene, and 4.5 wt % butenes.

Example 16

[0163] Example 16 demonstrates a process for sulphiding a hydroprocessing catalyst. The particular steps of the process are shown in FIG. **3**. The time of 0 hours (zero time) in FIG. **3** corresponds to a time after the hydroprocessing catalyst is introduced into the hydroprocessing reactor.

[0164] At ambient temperature, the hydroprocessing reactor (having previously been loaded with the hydroprocessing catalyst) was purged with hydrogen for 30 to 60 minutes at a set operating pressure (e.g., 40 to 60 barg). The set operating pressure was maintained by venting the reactor when the pressure of the reactor during hydrogen purging increased above the set operating pressure (e.g., due to a hydrogen source pressure greater than the set operating pressure).

[0165] After purging the hydroprocessing reactor for 30 to 60 minutes at ambient temperature, the hydrogen purge was stopped.

[0166] Still at the ambient temperature, the sulphiding feed was then introduced into the reactor using a high pressure pump against the set reactor pressure at a weight hourly space velocity (WHSV) of 3 hr^{-1} (on bone-dry catalyst basis). The sulphiding feed (e.g., for use in spiking stream **14** of FIG. **1**) was prepared by mixing n-hexadecane with dimethyl disulphide in appropriate quantity to give 3 wt % sulphur based on total weight of the sulphiding feed. For the sulphiding feed, as per catalyst sulphiding protocol followed, cracked feedstock cannot be used. Hence, n-hexadecane is used. In place of n-hexadecane, straight-run naphtha, diesel, or vacuum gas oils can also be used.

[0167] FIG. **3** indicates the hydroprocessing catalyst was soaked with a sulphiding feed without a flow of hydrogen in the reactor and at ambient temperature for a period of 3 hours (ending at time 3.5 hours after zero time in FIG. **3**). Catalyst soaking provides for complete wetting of the hydroprocessing catalyst; however, soaking is optional. Liquid was drained from the bottom of a downstream gas liquid separator.

[0168] After introducing the sulphiding feed to the reactor, the hydroprocessing reactor bed temperature was raised to 250° C. at a rate of 30° C. per hour with a flow of H_2 at a ratio of 200NL H_2/L liquid feed. As shown in FIG. **3**, the temperature was increased from a time of 3.5 hours to a time of 10.8 hours after zero time.

[0169] The hydroprocessing reactor bed temperature was then held at 250° C. for a period of 8 hours. As shown in FIG. **3**, the temperature was held from a time of 10.8 hours to a time of 18.8 hours after zero time.

[0170] After holding the bed temperature, the bed temperature was further increased to 320° C. to 350° C. at a rate of 20° C. per hour without any temperature overshoot at the final temperature. As shown in FIG. **3**, the temperature was increased from a time of 18.8 hours to a time of 22.3 hours after zero time.

[0171] The hydroprocessing reactor bed temperature was then maintained at 320° C. to 350° C. for a period of 8 hours. As shown in FIG. **3**, the temperature was maintained at 320° C. to 350° C. from a time of 22.3 hours to a time of 30.0 hours after zero time.

[0172] During the step of maintaining the temperature at 320° C. to 350° C. for 8 hours, after 5 hours of maintaining the temperature at 320° C. to 350° C., gas sampling began, and a first gas sample was obtained from the reactor effluent. A second gas sample was obtained close to 8 hours while the bed temperature is maintained at 320° C. to 350° C. The first and second gas samples were analyzed in a refinery gas analyzer (RGA) gas chromatograph and constancy of H_2S concentration in reactor effluent gases in the first and second samples signified further uptake of sulphur on the catalyst did not take place. This marked the completion of the catalyst sulphiding process. If the first and second samples had not exhibited constancy in H_2S concentration, additional samples would have been taken and the temperature maintained until two successive samples exhibited constancy in H_2S concentration.

What is claimed is:

1. A process for converting waste plastics to a high value product comprising:

converting the waste plastics to a hydrocarbon stream in a liquid phase, wherein the hydrocarbon stream comprises one or more chloride compounds in a concentration of 5 ppm or more based on a total weight of the hydrocarbon stream;

contacting the hydrocarbon stream with a first hydroprocessing catalyst in the presence of hydrogen to yield a first hydrocarbon product comprising C_1 to C_4 gases and C_5+ liquid hydrocarbons;

recovering the C_5+ liquid hydrocarbons in a treated hydrocarbon stream from the first hydrocarbon product, wherein the treated hydrocarbon stream comprises the one or more chloride compounds in a concentration of 3 to 5 ppm based on a total weight of the treated hydrocarbon stream;

dechlorinating the treated hydrocarbon stream to yield a polished hydrocarbon stream comprising one or more chloride compounds in a concentration of less than 3 ppm based on a total weight of the polished hydrocarbon stream; and

feeding the treated hydrocarbon stream or polished hydrocarbon stream to a steam cracker to yield the high value product,

wherein the treated hydrocarbon stream or polished hydrocarbon stream meets steam cracker feed requirements for chloride content, olefin content, and boiling end point.

2. The process of claim **1**, wherein the step of dechlorinating comprises contacting the treated hydrocarbon stream with a second hydroprocessing catalyst in the presence of hydrogen to yield a second hydrocarbon product.

3. The process of claim **1**, wherein the step of dechlorinating comprises removing at least a portion of the one or more chloride compounds via adsorptive dechlorination to yield the polished hydrocarbon stream.

4. The process of claim **1**, wherein the polished hydrocarbon stream comprises the one or more chloride compounds in a concentration of less than 1 ppm based on the total weight of the polished hydrocarbon stream, wherein the hydrocarbon stream comprises the one or more chloride compounds in a concentration of greater than 200 ppmw based on a total weight of the hydrocarbon stream.

5. The process of claim **1**, wherein the hydrocarbon stream comprises one or more olefins, wherein the treated hydrocarbon stream comprises the one or more olefins in a concentration of less than 1 wt. % based on the total weight of the treated hydrocarbon stream, and wherein the one or more olefins are present in the hydrocarbon stream in a concentration of 20 wt % or more based on the total weight of the hydrocarbon stream.

6. The process of claim **1**, wherein the hydrocarbon stream comprises heavy hydrocarbon molecules, and further comprising:

hydrocracking at least a portion of the heavy hydrocarbon molecules during the step of contacting the hydrocarbon stream with a first hydroprocessing catalyst.

7. The process of claim **1**, further comprising:

before the step of contacting the hydrocarbon stream with a first hydroprocessing catalyst, contacting a catalyst activating stream comprising one or more sulphides with the first hydroprocessing catalyst, and wherein the one or more sulphides are in an amount of about 0.5 wt % to 5 wt % based on the total weight of the catalyst activating stream.

8. The process of claim **1**, wherein the one or more sulphides of the hydrocarbon stream are present in a concentration of about 2 wt % based on the total weight of the hydrocarbon stream.

9. The process of claim **1**, wherein the step of contacting the hydrocarbon stream with a first hydroprocessing catalyst is performed at a weight hourly space velocity of 0.1 to 10 hr^{-1}, at a hydrogen to hydrocarbon ratio of 10 to 3,000 NL/L, and at a pressure of 1 to 200 barg.

10. The process of claim **1**, wherein the first hydroprocessing catalyst comprises cobalt and molybdenum on an alumina support, nickel and molybdenum on an alumina support, tungsten and molybdenum on an alumina support, nickel sulphide, molybdenum sulphides, a combination of nickel and molybdenum sulphides, or combinations thereof.

11. The process of claim **10**, wherein contacting the hydrocarbon stream with the first hydroprocessing catalyst comprises:

contacting one or more sulphides contained in or added to the hydrocarbon stream with the first hydroprocessing catalyst.

12. The process of claim **2**, wherein the second hydroprocessing catalyst comprises cobalt and molybdenum on an alumina support, nickel and molybdenum on an alumina support, tungsten and molybdenum on an alumina support, nickel sulphide, molybdenum sulphides, a combination of nickel and molybdenum sulphides, or combinations thereof.

13. The process of claim **12**, wherein contacting the treated hydrocarbon stream with the second hydroprocessing catalyst comprises:

contacting one or more chloride compounds contained in the treated hydrocarbon stream with the second hydroprocessing catalyst.

14. The process of claim **1**, wherein the high value products are ethylene, propylene, butene, butadiene, aromatic compounds, or combinations thereof.

15. The process of claim **1**, wherein the step of converting comprises:

subjecting the waste plastics to a pyrolysis process to produce one or more of plastic pyrolysis oil and tire pyrolysis oil in the hydrocarbon stream.

16. The process of claim **1**, wherein recovering a treated hydrocarbon stream from the first hydrocarbon product comprises:

separating the first hydrocarbon product into a treated product from a first chlorine-containing gas in a first separator; and

flowing the treated product in the treated hydrocarbon stream from the first separator to an adsorption unit or to a steam cracker.

17. The process of claim **2**, wherein the step of dechlorinating further comprises:

separating the second hydrocarbon product into a polished product and a second chlorine-containing gas in a second separator; and

flowing the polished product in the polished hydrocarbon stream from the second separator to a steam cracker.

18. The process of claim **1**, wherein the step of converting the waste plastics to a hydrocarbon stream in a liquid phase is performed in the presence of a head space purge gas fed to a pyrolysis unit, wherein the head space purge gas comprises hydrogen, nitrogen, steam, product gases, or combinations thereof.

19. The process of claim **1**, further comprising:

converting the waste plastics to C_1 to C_4 pyrolysis gases,

wherein one or more of the C_1 to C_4 pyrolysis gases, the C_1 to C_4 gases yielded in the step of contacting, and C_1 to C_4 gases yielded in the step of dechlorinating is fed to the steam cracker.

20. The process of claim **1**, wherein the step of contacting includes simultaneous i) dechlorination of the hydrocarbon stream such that the treated hydrocarbon stream comprises one or more chloride compounds in a concentration less than 1 ppmw based on the total weight of the treated hydrocarbon stream, ii) hydrogenation of the hydrocarbon stream such that the treated hydrocarbon stream comprises one or more olefins in a concentration less than 1 wt % based on the total weight of the treated hydrocarbon stream, and iii) reduction of heavy hydrocarbon molecules of the hydrocarbon stream.

* * * * *