A. H. BASTIAN.

CLAMPING WRENCH.

APPLICATION FILED FEB. 19, 1915.

1,169,600. Patented Jan. 25, 1916.

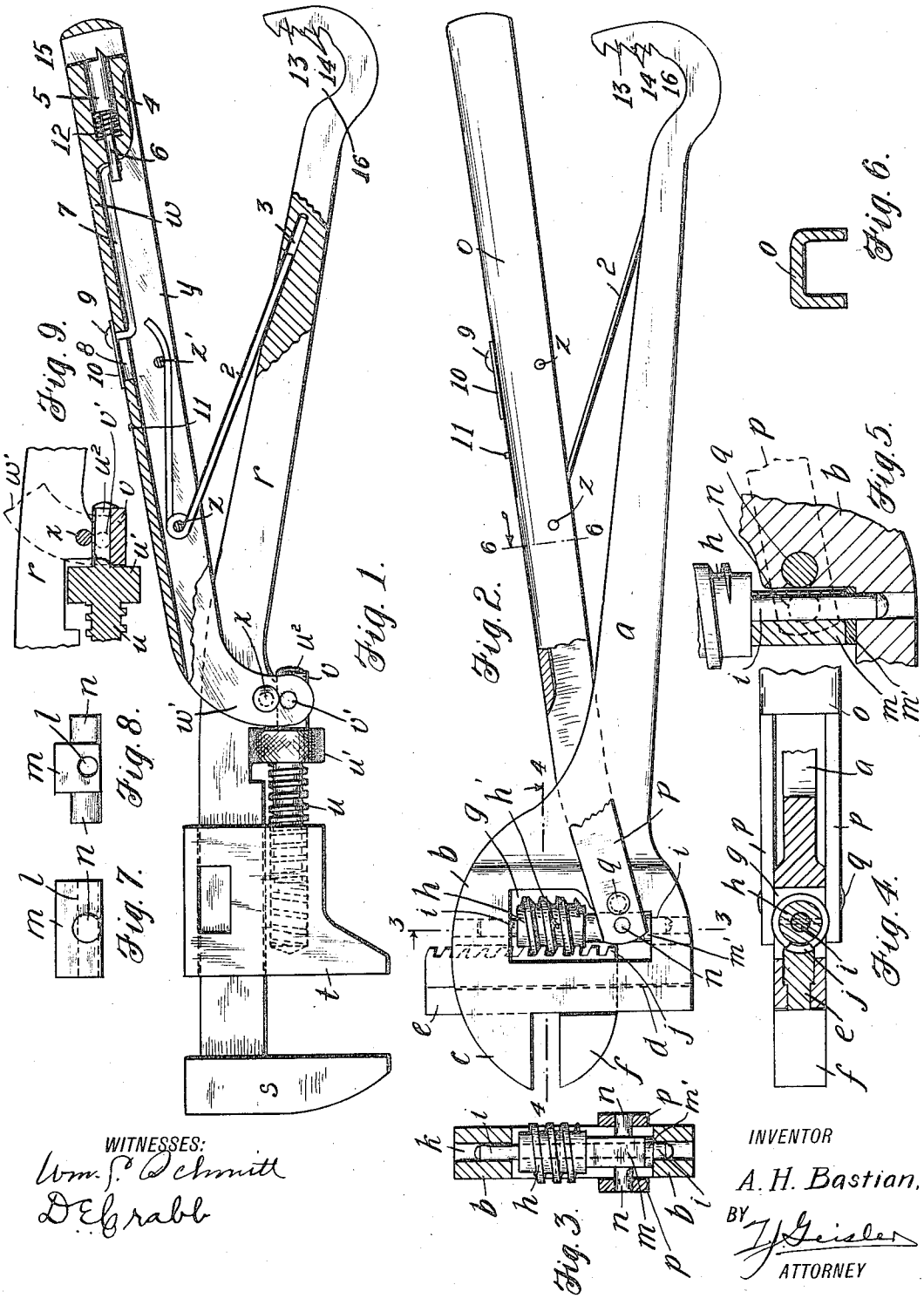

WITNESSES:

Wm. F. Schmitt

D. E. Crabb

INVENTOR

A. H. Bastian,

BY J. J. Geisler

ATTORNEY

UNITED STATES PATENT OFFICE.

AUGUST H. BASTIAN, OF HILLSDALE, OREGON.

CLAMPING-WRENCH.

1,169,600. Specification of Letters Patent. Patented Jan. 25, 1916.

Application filed February 19, 1915. Serial No. 9,437.

To all whom it may concern:

Be it known that I, AUGUST H. BASTIAN, a citizen of the United States, and a resident of Hillsdale, county of Multnomah, and State of Oregon, have invented a certain new and useful Improvement in Clamping-Wrenches or the like, of which the following is a specification.

My invention relates to tools such as wrenches, for example, comprising two members pivotally connected and operable one on the other for forcibly compressing their extremities or jaws.

The purpose of my invention is to provide a tool of this character which may be quickly adjusted to the object to which it is applied, and to make the means which I use for such purpose of a simple and durable construction.

My invention furthermore has for its particular purpose to improve the means actuating the movable jaw so that the power may be most effectively applied, and that the strain incidental to the application of the power will be properly taken care of, and will not tend to impose any undue strain.

In order to further explain my invention, it is required to illustrate and describe the details of its construction and mode of operation, which are shown in the accompanying drawings, constituting a part of this specification.

In such drawings, Figure 1 is a sectional side elevation with the parts broken away, and shows my invention as applied to a monkey wrench. Fig. 2 is a side elevation showing my device applied to an end wrench. Fig. 3 is a vertical section taken on the line 3—3 of Fig. 2. Fig. 4 is a horizontal section taken on the line 4—4 of Fig. 2. Fig. 5 is a larger-scale sectional detail illustrating the location and coöperation of the elements through which the power is applied to the movable jaw. Fig. 6 is a cross-section on the line 6—6 of Fig. 2. Figs. 7 and 8 show respectively a side elevation and an end elevation of what I term the pivot-block of my invention, being one of the elements through which the power is applied to the movable jaw, and Fig. 9 is a detail of construction relating to the wrench shown in Fig. 1.

For convenience, I will describe the construction of the type of wrench shown in Fig. 2 first, since the sectional details shown relate thereto. This wrench comprises a primary member, consisting of a shank *a*, on one extremity of which is formed a wrench-head *b*, made with an integral jaw *c*. The wrench-head has a longitudinal cavity *d*, in which slides the shank *e* of the movable jaw *f*. The wrench-head further has a portion cut out as at *g*. In this cut out portion is located the screw *h*, pinned by a pin *h'* on a shaft *i* and said screw engages with the teeth *j*, provided on the inner surface of the shank *e*, of the jaw *f*. One extremity of the shaft *i*, bears in a journal hole *k*, therefor provided in the wrench-head *b*. On the opposite end of the shaft *i* is mounted a pivot-block *m*, of which a side elevation is shown in Fig. 7 and an end elevation in Fig. 8. From the latter figures it will be observed that the pivot-block *m*, is made with a longitudinal hole *l*, for receiving the shaft *i*, and that the axis of the latter approximately intersects the axis of the trunnions *n*, projecting laterally from the pivot block *m*. *o* is a lever one end, *p*, of which is bifurcated and pivoted on a pin *q*, to the wrench-head *b* of the primary member *a*. The extremities of the perforated bifurcated portion *p* of the lever *o* are made with holes in which are journaled the trunnions *n* of the pivot-block *m*. The pivot *q*, of the lever *o* is located close to the trunnions *n*, of the pivot-block; see Fig. 5. By reason of this fact and that the axis of the longitudinal hole *l* of the pivot-block *m*, and the trunnions *n*, intersect as described, the lever *o* is given great power for applying clamping pressure to the movable jaw *f;* and, furthermore, no detrimental stress is imposed upon the pivot-block in the operation of applying such clamping pressure.

m' is a washer.

For the purpose of locking the movable jaw *f*, in its clamping position, I provide means for locking the free ends of the shank *a* and the lever *o*, together. These means will be more readily understood by comparing Figs. 1 and 2. The construction and operation of said means will be described in connection with the application of my invention to the type of wrench shown in Fig. 1. Such wrench consists of a shank *r*, made with an integral jaw *s*. On the shank *r*, slides the movable jaw *t*, in which is threaded a screw *u*, made with a milled head *u'* and a reduced extension u^2. See Fig. 9.

The latter is inserted in a pivot-block v, of similar construction and purpose as the pivot-block m. The latter has laterally projecting trunnions v' which are journaled in the forked end w of the lever w'. Such forked end is pivoted to the shank r by a pivot-pin x. The lever w is made with lateral flanges y, and pins z, z', on which is fastened a spring 2, one extremity of which bears in a hole 3, therefor provided in the shank r of the primary member. The outer end of the lever w' is made with a head 4 in which is reciprocably contained a locking-bolt 5, having a shank 6 provided with a perforation in which is secured one bent end of the rod 7, the opposite end of which is also bent and projects through a slot 8 of the lever w, and has a head 9 and a latch-plate 10 secured to it. The free end of the latch-plate 10 is understood to be made with a perforation, so that by lifting the same it may be locked with a stud 11, for holding the locking-bolt 5 in its retracted position; the locking-bolt being normally projected by the spring 12. The outer or free end of the shank r of the primary member is made with a perpendicularly projecting locking-head 13, having on its inner face a series of notches 14, formed like serrations, adapted to be engaged with the locking-bolt 5. The outer end of the lever w' is formed preferably with a socket 15, in which to receive the locking-head 13. The outer ends of the shank of the primary member and the lever of my wrench may be locked together by said locking means when the wrench is not to be used, and when so locked together, the cavity 16 will be convenient for hanging up the wrench, on a peg in a tool-case or on the wall. As evident, my wrench may also be used like a common wrench, for unscrewing a nut, for example, in which case the lever o (or w') is locked to the shank of the primary member, and the movable jaw f, (or t) is then set against the fixed jaw as desired, by manipulating the screw h (or u).

I claim—

1. In a device of the character described, the combination of a primary member consisting of a shank made with a head provided with a fixed jaw; a coöperating jaw reciprocably supported by said head of said primary member; means for moving the reciprocable jaw toward and from said fixed jaw, a shaft included in such means, such shaft having reciprocable movement in the head of said primary member; a pivot-block carried by said reciprocating shaft, such block made with trunnions, a lever pivoted at its upper end to the shank of said primary member, the pivot being located close to the trunnions of said pivot-block, and the trunnions of the latter being journaled in said upper end of the lever.

2. In a device of the character described, the combination of a primary member consisting of a shank made with a head provided with a fixed jaw; a coöperating jaw reciprocably supported by said head of said primary member; means for moving the reciprocable jaw toward and from said fixed jaw; a shaft included in such means, such shaft having reciprocable movement in the head of said primary member; a pivot-block carried by said reciprocating shaft, such block made with trunnions, a lever pivoted at its upper end to the shank of said primary member, the pivot being located close to the trunnions of said pivot-block, and the trunnions of the latter being journaled in said upper end of the lever; means carried by the free end of the shank on said primary member and said lever for locking the latter against retractive movement.

3. In a device of the character described, the combination of a primary member consisting of a shank made with a head provided with a fixed jaw; a coöperating jaw reciprocably supported by said head of said primary member; a shaft reciprocable in said head of the primary member; a rotatable screw carried by said shaft and operating to reciprocate said movable jaw; a pivot-block made with lateral trunnions and a longitudinal hole, the longitudinal axis of the latter intersecting approximately the axis of said trunnions, such pivot-block being slidably mounted on said shaft; a lever pivoted at its upper end to the shank of said primary member, the pivot being located close to the trunnions of said pivot-block, and the trunnions of the latter being journaled in said upper end of the lever.

4. In a device of the character described, the combination of a primary member consisting of a shank made with a head provided with a fixed jaw; a coöperating jaw reciprocably supported by said head of said primary member; a shaft reciprocable in said head of the primary member, a rotatable screw carried by said shaft and operating to reciprocate said movable jaw, a pivot-block made with lateral trunnions and a longitudinal hole, the longitudinal axis of the latter intersecting approximately the axis of said trunnions, a lever pivoted at its upper end to the shank of said primary member, the pivot being located close to the trunnions of said pivot-block, and the trunnions of the latter being journaled in said upper end of the lever; means carried by the free ends of the shank of said primary member and said lever for locking the latter against retractive movement.

5. In a device of the character described, the combination of a primary member consisting of a shank made with a head provided with a fixed jaw; a coöperating jaw reciprocably supported by said head of said

primary member; a shaft reciprocable in said head of the primary member, a rotatable screw carried by said shaft and operating to reciprocate said movable jaw, a pivot-block carried by said reciprocating shaft, such block made with trunnions, a lever pivoted at its upper end to the shank of said primary member, the pivot being located close to the trunnions of said pivot-block, and the trunnions of the latter being journaled in said upper end of the lever.

6. In a device of the character described, the combination of a primary member consisting of a shank made with a head provided with a fixed jaw; a coöperating jaw reciprocably supported by said head of said primary member; a shaft reciprocable in said head of the primary member, a rotatable screw carried by said shaft and operating to reciprocate said movable jaw, a pivot-block carried by said reciprocating shaft, such block made with trunnions, a lever having its extremities operatively connected with said reciprocable shaft and being fulcrumed in close proximity to such point of connection; means carried by the free ends of the shank of said primary member and said lever for locking the latter against retractive movement.

AUGUST H. BASTIAN.

Witnesses:
WM. C. SCHMITT,
D. E. CRABB.